Operation Manual

Model T700
Dynamic Dilution Calibrator

Also supports operation of

Model T700U

(when used in conjunction with T700U addendum, PN 06876)

© TELEDYNE API (TAPI)
9970 CARROLL CANYON ROAD
SAN DIEGO, CA 92131-1106
USA

Toll-free Phone: 800-324-5190
Phone: +1 858-657-9800
Fax: +1 858-657-9816
Email: api-sales@teledyne.com
Website: http://www.teledyne-api.com/

Copyright 2010-2015
Teledyne API

06873E DCN7106
10 June 2015

NOTICE OF COPYRIGHT

© 2010-2015 Teledyne API. All rights reserved.

TRADEMARKS

All trademarks, registered trademarks, brand names or product names appearing in this document are the property of their respective owners and are used herein for identification purposes only.

This page intentionally left blank.

IMPORTANT SAFETY INFORMATION

Important safety messages are provided throughout this manual for the purpose of avoiding personal injury or instrument damage. Please read these messages carefully. Each safety message is associated with a safety alert symbol, and are placed throughout this manual and inside the instrument. The symbols with messages are defined as follows:

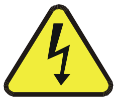

WARNING: Electrical Shock Hazard

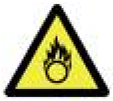

HAZARD: Strong oxidizer

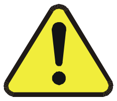

GENERAL WARNING/CAUTION: Read the accompanying message for specific information.

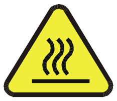

CAUTION: Hot Surface Warning

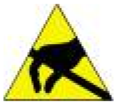

Do Not Touch: Touching some parts of the instrument without protection or proper tools could result in damage to the part(s) and/or the instrument.

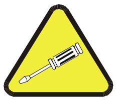

Technician Symbol: All operations marked with this symbol are to be performed by qualified maintenance personnel only.

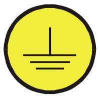

Electrical Ground: This symbol inside the instrument marks the central safety grounding point for the instrument.

CAUTION

This instrument should only be used for the purpose and in the manner described in this manual. If you use this instrument in a manner other than that for which it was intended, unpredictable behavior could ensue with possible hazardous consequences.

NEVER use any gas analyzer to sample combustible gas(es)!

Note

For Technical Assistance regarding the use and maintenance of this instrument or any other Teledyne API product, please contact Teledyne API's Technical Support Department:

Telephone: 800-324-5190 Email: sda_techsupport@teledyne.com

or by accessing various service options on our website:

http://www.teledyne-api.com/.

CONSIGNES DE SÉCURITÉ

Des consignes de sécurité importantes sont fournies tout au long du présent manuel dans le but d'éviter des blessures corporelles ou d'endommager les instruments. Veuillez lire attentivement ces consignes. Chaque consigne de sécurité est représentée par un pictogramme d'alerte de sécurité; ces pictogrammes se retrouvent dans ce manuel et à l'intérieur des instruments. Les symboles correspondent aux consignes suivantes :

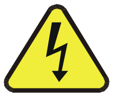

AVERTISSEMENT : Risque de choc électrique

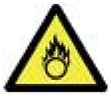

DANGER : Oxydant puissant

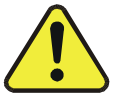

AVERTISSEMENT GÉNÉRAL / MISE EN GARDE : Lire la consigne complémentaire pour des renseignements spécifiques

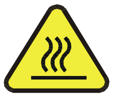

MISE EN GARDE : Surface chaude

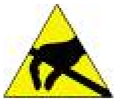

Ne pas toucher : Toucher à certaines parties de l'instrument sans protection ou sans les outils appropriés pourrait entraîner des dommages aux pièces ou à l'instrument.

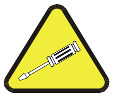

Pictogramme « technicien » : Toutes les opérations portant ce symbole doivent être effectuées uniquement par du personnel de maintenance qualifié.

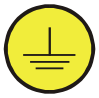

Mise à la terre : Ce symbole à l'intérieur de l'instrument détermine le point central de la mise à la terre sécuritaire de l'instrument.

MISE EN GARDE

Cet instrument doit être utilisé aux fins décrites et de la manière décrite dans ce manuel. Si vous utilisez cet instrument d'une autre manière que celle pour laquelle il a été prévu, l'instrument pourrait se comporter de façon imprévisible et entraîner des conséquences dangereuses.

NE JAMAIS utiliser un analyseur de gaz pour échantillonner des gaz combustibles!

WARRANTY

WARRANTY POLICY (02024G)

Teledyne API (TAPI), a business unit of Teledyne Instruments, Inc., provides that:

Prior to shipment, TAPI equipment is thoroughly inspected and tested. Should equipment failure occur, TAPI assures its customers that prompt service and support will be available.

COVERAGE

After the warranty period and throughout the equipment lifetime, TAPI stands ready to provide on-site or in-plant service at reasonable rates similar to those of other manufacturers in the industry. All maintenance and the first level of field troubleshooting are to be performed by the customer.

NON-TAPI MANUFACTURED EQUIPMENT

Equipment provided but not manufactured by TAPI is warranted and will be repaired to the extent and according to the current terms and conditions of the respective equipment manufacturer's warranty.

PRODUCT RETURN

All units or components returned to Teledyne API should be properly packed for handling and returned freight prepaid to the nearest designated Service Center. After the repair, the equipment will be returned, freight prepaid.

The complete Terms and Conditions of Sale can be reviewed at http://www.teledyne-api.com/terms_and_conditions.asp

CAUTION – Avoid Warranty Invalidation

Failure to comply with proper anti-Electro-Static Discharge (ESD) handling and packing instructions and Return Merchandise Authorization (RMA) procedures when returning parts for repair or calibration may void your warranty. For anti-ESD handling and packing instructions please refer to the manual, Fundamentals of ESD, PN 04786, in its "Packing Components for Return to Teledyne API's Customer Service" section. The manual can be downloaded from our website at http://www.teledyne-api.com under Help Center > Product Manuals in the Special Manuals section; RMA procedures are under Help Center > Return Authorization.

This page intentionally left blank.

ABOUT THIS MANUAL

Presented here is information regarding the documents that are included with this manual (Structure) and how the content is organized (Organization).

STRUCTURE

This T700 manual, PN 06873, is comprised of multiple documents, assembled in PDF format, as listed below.

Part No.	Rev	Name/Description
06873	E	Operation Manual, T700 Dynamic Dilution Calibrator
05623	G	Appendix A, Menu Trees and related software documentation
06852	B	Spare Parts List (in Appendix B of this manual)
05625	D	Appendix C, Repair Form
069140100	A	Interconnect List (in Appendix D of this manual)

Appendix D, Schematics:

06914	A	Interconnect Diagram
04420	B	SCH, PCA 04120, UV DETECTOR
04422	A	SCH, PCA 04144, DC HEATER/TEMP SENSOR
04421	A	SCH, PCA 04166, UV LAMP POWER SUPPLY
04354	D	SCH, PCA 04003, Pressure/Flow Transducer Interface
04524	E	SCH, PCA 04523, RELAY CARD
05698	B	SCH, PCA 05697 ADPTR, EXT VALVE DRIVER
05803	B	SCH, PCA 05802, MOTHERBOARD, GEN-5
06698	D	SCH, PCA 06670, INTRFC, LCD TCH SCRN,
06882	B	SCH, LVDS TRANSMITTER BOARD
06731	B	SCH, AUX-I/O BOARD

Note **We recommend that this manual be read in its entirety before any attempt is made to operate the instrument.**

This page intentionally left blank.

TABLE OF CONTENTS

1. INTRODUCTION 19
1.1. T700 Calibrator Overview 19
1.2. Features 19
1.3. Options 20
2. SPECIFICATIONS AND APPROVALS 23
2.1. Specifications 23
2.2. Approvals and Certifications 24
2.2.1. Safety 24
2.2.2. EMC 25
2.2.3. Other Type Certifications 25
3. GETTING STARTED 27
3.1. Unpacking and Initial Setup 27
3.1.1. Ventilation Clearance 28
3.2. Calibrator Layout 28
3.2.1. Front Panel 29
3.2.2. Rear Panel 32
3.2.3. Internal Layout 34
3.3. Connections and Setup 36
3.3.1. Electrical Connections 36
3.3.1.1. Connecting Power 36
3.3.1.2. Connecting Analog Outputs 37
3.3.1.3. Connecting the Status Outputs 37
3.3.1.4. Connecting the Control Inputs 39
3.3.1.5. Connecting the Control Outputs 41
3.3.1.6. Connecting the External Valve Driver Option 42
3.3.1.7. Connecting the Communications Interfaces 44
3.3.2. Pneumatic Connections 51
3.3.2.1. About Diluent Gas (Zero Air) 51
3.3.2.2. About Calibration Gas 52
3.3.2.3. Connecting Diluent Gas to the Calibrator 55
3.3.2.4. Connecting Calibration Source Gas to the T700 Calibrator 55
3.3.2.5. Connecting Gas Outputs from the Calibrator 56
3.3.2.6. Other Pneumatic Connections 60
3.3.3. Permeation Tube Setup for the T700 71
3.3.4. Permeation Tube Calculation 72
3.4. Startup, Functional Checks, and Initial Calibration 74
3.4.1. Start Up 74
3.4.2. Warning Messages 75
3.4.3. Functional Checks 77
3.4.4. Setting Up the Calibration Gas Inlet Ports 78
3.4.5. Default Gas Types 78
3.4.6. User Defined Gas Types 78
3.4.6.1. User Defined Gas Types – General 78
3.4.6.2. User Defined Gas Types – Defining the Gas Name 80
3.4.6.3. User Defined Gas Types – Setting the MOLAR MASS 81
3.4.6.4. Enabling and Disabling Gas Types 83
3.4.7. Defining Calibration Source Gas Cylinders 84
3.4.7.1. Setting Up the Ports with Single Gas Cylinders 84
3.4.7.2. Setting Up the Ports with Multiple Gas Cylinders 86
3.4.8. Selecting an Operating Mode for the O3 Generator 87

3.4.8.1. CNST (CONSTANT)....87
3.4.8.2. BNCH (BENCH)....87
3.4.9. Setting the T700's Total Gas Flow Rate....88
4. OVERVIEW OF OPERATING MODES AND BASIC OPERATION....91
4.1. STANDBY MODE....94
4.1.1. Test Functions....95
4.2. GENERATE MODE....98
4.2.1. GENERATE > AUTO: Basic Generation of Calibration Mixtures....100
4.2.2. GENERATE > MAN: Generating Calibration Mixtures Manually....102
4.2.2.1. Determining the Source Gas Flow Rate....102
4.2.2.2. Determining the Diluent Gas Flow Rate....103
4.2.2.3. Determining the Diluent Gas Flow Rate with the Optional O_3 Generator Installed....103
4.2.2.4. Setting Source Gas and Diluent Flow Rates Using the GENERATE > MAN Menu....104
4.2.3. GENERATE > GPT: Performing a Gas Phase Titration Calibration....105
4.2.3.1. GPT Theory....105
4.2.3.2. Choosing an Input Concentration for the NO....105
4.2.3.3. Determining the TOTAL FLOW for GPT Calibration Mixtures....106
4.2.3.4. T700 Calibrator GPT Operation....107
4.2.3.5. Initiating a GPT Calibration Gas Generation....108
4.2.4. GENERATE > GPTPS: Performing a Gas Phase Titration Pre-Set....109
4.2.4.1. T700 Calibrator GPTPS Operation....109
4.2.4.2. Initiating a GPT Pre-Set....111
4.2.5. GENERATE > PURGE: Activating the T700's Purge Feature....112
4.2.6. GENERATE >ACT>: VIEWING CONCENTRATIONS Generated from Multi-Gas Cylinders....114
4.2.6.1. Using the T700 Calibrator as an O_3 Photometer....114
4.3. AUTOMATIC CALIBRATION SEQUENCES....115
4.3.1. SETUP > SEQ: Programming Calibration Sequences....115
4.3.1.1. Activating a Sequence from the T700 Front Panel....117
4.3.1.2. Naming a Sequence....118
4.3.1.3. Setting the Repeat Count for a Sequence....119
4.3.1.4. Using the T700's Internal Clock to Trigger Sequences....120
4.3.1.5. Setting Up Control Inputs for a Sequence....123
4.3.1.6. Setting Up Control Outputs for a Sequence....124
4.3.1.7. Setting the PROGRESS Reporting Mode for the Sequences....126
4.3.2. Adding Sequence Steps....127
4.3.2.1. The GENERATE Step....128
4.3.2.2. The GPT Step....129
4.3.2.3. The GPTPS Step....130
4.3.2.4. The PURGE Step....131
4.3.2.5. The STANDBY Step....131
4.3.2.6. The DURATION Step....132
4.3.2.7. The EXECSEQ Step....133
4.3.2.8. The CC OUTPUT Step....134
4.3.2.9. The MANUAL Gas Generation Step....135
4.3.2.10. Deleting or Editing an Individual Step in a Sequence....136
4.3.3. Deleting a Sequence....137
4.4. SETUP > CFG....138
4.5. SETUP > CLK: Setting the Internal Time-of-Day Clock and Adjusting Speed....139
4.5.1. Setting the Internal Clock's Time and Day....139
4.5.2. Adjusting the Internal Clock's Speed....140
4.6. SETUP > PASS....141
4.7. SETUP > COMM: Communications Ports....143
4.7.1. ID (Machine Identification)....143
4.7.2. INET (Ethernet)....144
4.7.3. COM1 and COM2 (Mode, Baud Rate and Test Port)....144
4.8. SETUP > MORE > FLOW....144

4.9. SETUP > MORE > VARS: Internal Variables (VARS)....144
4.10. SETUP > MORE > DIAG: DIAGNOSTICS FUNCTIONS....147
4.10.1. TEST CHAN OUTPUT: Using the TEST Channel Analog Output....147
4.10.1.1. Configuring the Test Channel Analog Output....147
4.10.1.2. Selecting a Test Channel Function to Output....150
4.10.1.3. Test Channel Voltage Range Configuration....152
4.10.1.4. Turning the Test Channel Over-Range Feature ON/OFF....153
4.10.1.5. Adding a Recorder Offset to the Test Channel....154
4.10.1.6. Test Channel Calibration....155
4.10.1.7. AIN Calibration....160
4.11. SETUP > LVL: Setting up and using LEADS (Dasibi) Operating Levels....161
4.11.1. General Information about LEADS LEVELS....161
4.11.2. Dot commands....161
4.11.3. Levels....162
4.11.4. Activating an existing LEVEL....162
4.11.5. Programming New LEVELS....163
4.11.5.1. Creating a GENERATE LEVEL....164
4.11.5.2. Creating a GPT LEVEL....165
4.11.5.3. Creating a GPTPS LEVEL....166
4.11.5.4. Creating a MANUAL LEVEL....167
4.11.5.5. Editing or Deleting a LEVEL....168
4.11.6. CONFIGURING LEVEL Status Blocks....169
5. COMMUNICATIONS SETUP AND OPERATION....171
5.1. Data Terminal/Communication Equipment (DTE DCE)....171
5.2. Communication Modes, Baud Rate and Port Testing....172
5.2.1. Communication Modes....172
5.2.2. COM Port Baud Rate....175
5.2.3. COM Port Testing....176
5.3. RS-485 (Option)....177
5.4. Remote Access via the Ethernet....177
5.4.1. Configuring the Ethernet Interface using DHCP....177
5.4.1.1. Manually Configuring the Network IP Addresses....180
5.4.2. Changing the Calibrator's HOSTNAME....182
5.4.3. USB PORT (Option) for Remote Access....183
6. REMOTE OPERATION....185
6.1. Computer Mode....185
6.1.1. Remote Control via APICOM....185
6.2. Interactive Mode....186
6.2.1. Remote Control via a Terminal Emulation Program....186
6.2.1.1. Help Commands in Interactive Mode....186
6.2.1.2. Command Syntax....187
6.2.1.3. Data Types....188
6.2.1.4. Status Reporting....188
6.2.1.5. General Message Format....189
6.3. Remote Access by Modem....189
6.4. Password Security for Serial Remote communications....192
7. CALIBRATION AND VERIFICATION....193
7.1. Viewing the Performance Statistics for the T700's MFC's....193
7.2. Calibrating the Output of the T700's MFC's....195
7.2.1. Setup for Verification and Calibration of the T700's MFC's....196
7.2.2. Verifying and Calibrating the T700's MFC's....197
7.3. Verifying and Calibrating the T700's Optional O_3 Photometer....199
7.3.1. Setup for Verifying O_3 Photometer Performance....199
7.3.2. Verifying O_3 Photometer Performance....200
7.3.3. Setup for Calibration of the O_3 Photometer....201
7.3.3.1. Setup Using Direct Connections....201

7.3.3.2. Setup Using a Calibration Manifold 202
7.3.3.3. Calibration Manifold Exhaust/Vent Line 202
7.3.4. Performing an O_3 Photometer External Calibration 202
7.3.4.1. Photometer Zero Calibration 203
7.3.4.2. Photometer Span Calibration 204
7.3.5. O_3 Photometer Dark Calibration 205
7.3.6. O_3 Photometer Gas Flow Calibration 206
7.3.7. O_3 Photometer BackPressure Compensation Calibration 207
7.4. Calibrating the O_3 Generator 208
7.4.1. Setup for Verification and Calibration the O_3 Generator 208
7.4.1.1. Setup Using Direct Connections 208
7.4.2. O_3 Generator Calibration Procedure 210
7.4.2.1. Viewing O_3 Generator Calibration Points 210
7.4.2.2. Adding or Editing O_3 Generator Calibration Points 211
7.4.2.3. Deleting O_3 Generator Calibration Points 212
7.4.2.4. Turning O_3 Generator Calibration Points ON / OFF 213
7.4.2.5. Performing an Automatic Calibration of the Optional O_3 Generator 214
7.5. T700 Gas Pressure Sensor Calibration 215
7.5.1.1. Calibrating the Diluent, Cal Gas Optional O_3 Generator Pressure Sensors 217
7.5.1.2. Calibrating the Optional O_3 Photometer Sample Gas Pressure Sensors 218

8. MAINTENANCE 219

8.1. Maintenance Schedule 219
8.2. Maintenance Procedures 221
8.2.1. Auto Leak Check 221
8.2.1.1. Equipment Required 221
8.2.1.2. Setup Auto Leak Check 221
8.2.1.3. Performing the Auto Leak Check Procedure 224
8.2.1.4. Returning the T700 to Service after Performing an Auto Leak Check 224
8.2.2. Cleaning or Replacing the Absorption Tube 225
8.2.3. UV Source Lamp Adjustment 226
8.2.4. UV Source Lamp Replacement 227
8.2.5. Ozone Generator UV Lamp Adjustment or Replacement 228

9. TROUBLESHOOTING AND SERVICE 229

9.1. General Troubleshooting 229
9.1.1. Fault Diagnosis with WARNING Messages 230
9.1.2. Fault Diagnosis With Test Functions 234
9.1.3. Using the Diagnostic Signal I/O Function 236
9.2. Using the Analog Output Test Channel 238
9.3. Using the Internal Electronic Status LEDs 239
9.3.1. CPU Status Indicator 239
9.3.2. Relay PCA Status LEDs 239
9.3.2.1. I^2C Bus Watchdog Status LEDs 239
9.3.2.2. O_3 Option Status LEDs 240
9.3.3. Valve Driver PCA STATUS LEDs 241
9.4. Subsystem Checkout 242
9.4.1. Verify Subsystem Calibration 242
9.4.2. AC Main Power 242
9.4.3. DC Power Supply 243
9.4.4. I^2C Bus 244
9.4.5. Touchscreen Interface 244
9.4.6. LCD Display Module 244
9.4.7. Relay PCA 245
9.4.8. Valve Driver PCA 245
9.4.9. Input Gas Pressure / Flow Sensor Assembly 246
9.4.10. PHOTOMETER O3 Generator Pressure/FLOW SENSOR Assembly 247
9.4.11. Motherboard 248

9.4.11.1. A/D Functions 248
9.4.11.2. Test Channel / Analog Outputs Voltage 248
9.4.11.3. Status Outputs 250
9.4.11.4. Control Inputs 251
9.4.11.5. Control Outputs 251
9.4.12. CPU 252
9.4.13. The Calibrator Doesn’t Appear on the Lan or Internet 252
9.4.14. RS-232 Communications 253
9.4.14.1. General RS-232 Troubleshooting 253
9.4.14.2. Troubleshooting Calibrator/Modem or Terminal Operation 253
9.4.15. Temperature Problems 254
9.4.15.1. Box / Chassis Temperature 254
9.4.15.2. Photometer Sample Chamber Temperature 254
9.4.15.3. UV Lamp Temperature 254
9.4.15.4. Ozone Generator Temperature 255
9.5. TroubleShooting the Optional O_3 Photometer 255
9.5.1. Dynamic Problems with the Optional O3 Photometer 255
9.5.1.1. Noisy or Unstable O_3 Readings at Zero 255
9.5.1.2. Noisy, Unstable, or Non-Linear Span O_3 Readings 256
9.5.1.3. Slow Response to Changes in Concentration 256
9.5.1.4. The Analog Output Signal Level Does Not Agree With Front Panel Readings 256
9.5.1.5. Cannot Zero 256
9.5.1.6. Cannot Span 256
9.5.2. Checking Measure / Reference Valve 257
9.5.3. Checking The UV Lamp Power Supply 258
9.6. TroubleShooting the Optional O_3 generator 259
9.6.1. Checking The UV Source Lamp Power Supply 259
9.7. Service Procedures 260
9.7.1. Disk-On-Module Replacement Procedure 260
9.8. Technical Assistance 261
9.9. Frequently Asked Questions (FAQs) 261
10. PRINCIPLES OF OPERATION 263
10.1. Basic Principles of Dynamic Dilution Calibration 263
10.1.1. Gas Phase Titration Mixtures for O_3 and NO_2 264
10.2. Pneumatic Operation 265
10.2.1. Gas Flow Control 266
10.2.1.1. Diluent and Source Gas Flow Control 266
10.2.1.2. Flow Control Assemblies for Optional O_3 Components 267
10.2.1.3. Critical Flow Orifices 268
10.2.2. Internal Gas Pressure Sensors 269
10.3. Electronic Operation 270
10.3.1. Overview 270
10.3.2. CPU 271
10.3.2.1. Disk-on-Module (DOM) 272
10.3.2.2. Flash Chip 272
10.3.3. Relay PCA 273
10.3.3.1. Valve Control 274
10.3.3.2. Heater Control 274
10.3.3.3. Relay PCA Status LEDs & Watch Dog Circuitry 274
10.3.3.4. Relay PCA Watchdog Indicator (D1) 275
10.3.4. Valve Driver PCA 276
10.3.4.1. Valve Driver PCA Watchdog Indicator 276
10.3.5. Motherboard 277
10.3.5.1. A to D Conversion 277
10.3.5.2. Sensor Inputs 277
10.3.5.3. Thermistor Interface 277
10.3.5.4. Analog Outputs 277

10.3.5.5. External Digital I/O....278
10.3.5.6. I^2C Data Bus....278
10.3.5.7. Power-up Circuit....278
10.3.6. Input Gas Pressure Sensor PCA....278
10.3.7. Power Supply and Circuit Breaker....279
10.4. Front Panel Touchscreen/Display Interface....280
10.4.1.1. Front Panel Interface PCA....280
10.5. Software Operation....281
10.6. O_3 Generator Operation....282
10.6.1. Principle of Photolytic O_3 Generation....282
10.6.2. O_3 Generator – Pneumatic Operation....283
10.6.3. O_3 Generator – Electronic Operation....284
10.6.3.1. O_3 Generator Temperature Control....285
10.6.3.2. Pneumatic Sensor for the O_3 Generator....286
10.7. Photometer Operation....286
10.7.1. Measurement Method....287
10.7.1.1. Calculating O_3 Concentration....287
10.7.1.2. The Measurement / Reference Cycle....288
10.7.1.3. The Absorption Path....290
10.7.1.4. Interferent Rejection....290
10.7.2. Photometer Layout....291
10.7.3. Photometer Pneumatic Operation....291
10.7.4. Photometer Electronic Operation....292
10.7.4.1. O_3 Photometer Temperature Control....293
10.7.4.2. Pneumatic Sensors for the O_3 Photometer....293

LIST OF FIGURES

Figure 3-1: T700 Front Panel Layout 29
Figure 3-4: T700 Rear Panel Layout 32
Figure 3-5: T700 Internal Layout – Top View – Base Unit 34
Figure 3-6: T700 Internal Layout – Top View – with Optional O_3 Generator and Photometer 35
Figure 3-7: T700 Analog Output Connector 37
Figure 3-8: Status Output Connector 38
Figure 3-9: T700 Digital Control Input Connectors 40
Figure 3-10: T700 Digital Control Output Connector 41
Figure 3-17: Rear Panel Connector Pin-Outs for RS-232 Mode 46
Figure 3-18: Default Pin Assignments for CPU COMM Port Connector (RS-232). 47
Figure 3-19: Jumper and Cables for Multidrop Mode 49
Figure 3-20: RS-232-Multidrop PCA Host/Analyzer Interconnect Diagram 50
Figure 3-21: Set up for T700 – Connecting the Basic T700 to a Sample Manifold 56
Figure 3-22: Set up for T700 – Connecting the T700 to a Sample Manifold 57
Figure 3-23: Set up for T700 – Connecting the T700 to a Calibration Manifold 58
Figure 3-24: Set up for T700 – Connecting the T700 to a Dual Span Gas / Zero Air Manifold 59
Figure 3-25: T700 Pneumatic Diagram – Base Unit 60
Figure 3-26: Internal Pneumatics for T700 Calibrator with Optional O_3 Generator and GPT Chamber 61
Figure 3-27: Internal Pneumatics for T700 Calibrator with Optional O_3 Generator and Photometer 63
Figure 3-28: Basic T700 with Multiple Calibration Gas MFCs 65
Figure 3-29: T700 with Multiple Calibration Gas MFCs and O_3 Options 1A and 2A Installed 66
Figure 4-1: Front Panel Display 92
Figure 4-2: Gas Flow through T700 with O_3 Generator and Photometer Options during STANDBY 95
Figure 4-3: Viewing T700 Test Functions 96
Figure 4-4: Gas Flow through Basic T700 in GENERATE Mode 98
Figure 4-5: Gas Flow through T700 with O_3 Options when Generating Non-O_3 Source Gas 99
Figure 4-6: Gas Flow through T700 with O_3 Options when Generating O_3 99
Figure 4-7: Gas Flow through T700 with O_3 Options when in GPT Mode 107
Figure 4-8: Gas Flow through T700 with O_3 Options when in GPTPS Mode 110
Figure 4-9: Gas Flow through T700 with O_3 Options when in PURGE mode 112
Figure 4-10: T700 the TEST CHANNEL Connector 147
Figure 4-11: Setup for Calibrating the TEST CHANNEL 158
Figure 6-1: APICOM Remote Control Program Interface 186
Figure 7-1: Location of MFC Outlet Ports 196
Figure 7-2: Set up for Verifying Optional O_3 Photometer 199
Figure 7-3: External Photometer Validation Setup – Direct Connections 201
Figure 7-4: External Photometer Validation Setup with Calibration Manifolds 202
Figure 7-5: O_3 Generator Calibration Setup – Direct Connections 208
Figure 7-6: Pressure Monitor Points – T700 – Basic Unit 216
Figure 7-7: Pressure Monitor Points – T700 with O_3 Options and Multiple Cal MFCs Installed 216
Figure 8-1: Bypassing the Photometer Sensor PCA and Pump 221
Figure 8-2: Gas Port Setup for Auto-Leak Check Procedure 222
Figure 8-3: Gas Flow for Auto-Leak Check Procedure of Base Model T700's 223
Figure 8-4: Gas Flow for Auto-Leak Check Procedure of T700's with Optional Photometer 223
Figure 8-5: Photometer Assembly – Lamp Adjustment / Installation 227
Figure 8-6: O_3 Generator UV Lamp Location 228
Figure 9-1: Example of Signal I/O Function 237
Figure 9-2: CPU Status Indicator 239
Figure 9-3: Relay PCA Status LEDS Used for Troubleshooting 240
Figure 9-4: Valve Driver PCA Status LEDS Used for Troubleshooting 241
Figure 9-5: Location of DC Power Test Points on Relay PCA 243

Figure 10-1: Location of Gas Flow Control Assemblies for T700's with O_3 Options Installed 267
Figure 10-2: Flow Control Assembly & Critical Flow Orifice..............................268
Figure 10-3: T700 Electronic Block Diagram..............................270
Figure 10-4: T700 CPU Board Annotated 272
Figure 10-5: Relay PCA..............................273
Figure 10-6: Heater Control Loop Block Diagram. 274
Figure 10-7: Status LED Locations – Relay PCA..............................275
Figure 10-8: Status LED Locations – Valve Driver PCA 276
Figure 10-9: T700 Power Distribution Block diagram..............................279
Figure 10-10: Front Panel Display Interface Block Diagram 280
Figure 10-11: Schematic of Basic Software Operation 281
Figure 10-12: O_3 Generator Internal Pneumatics..............................282
Figure 10-13: O_3 Generator Valve and Gas Fixture Locations..............................283
Figure 10-14: O_3 Generator – Electronic Block Diagram 284
Figure 10-15: O_3 Generator Electronic Components Location..............................285
Figure 10-16: O_3 Generator Temperature Thermistor and DC Heater Locations 286
Figure 10-17: O_3 Photometer Gas Flow – Measure Cycle..............................289
Figure 10-18: O_3 Photometer Gas Flow – Reference Cycle 289
Figure 10-19: O_3 Photometer Absorption Path..............................290
Figure 10-20: O_3 Photometer Layout – Top Cover Removed 291
Figure 10-21: O_3 Photometer Electronic Block Diagram..............................292

LIST OF TABLES

Table 1-1: Calibrator Options 20
Table 2-1: T700 Dilution System Specifications....23
Table 2-2: T700 Dilution Electrical and Physical Specifications....23
Table 2-3: T700 Specifications for Optional Ozone Generator 24
Table 2-4: T700 Specifications for Optional O_3 Photometer 24
Table 3-1: Display Screen and Touch Control Description 30
Table 3-2: Rear Panel Description 33
Table 3-3: Status Output Pin Assignments 38
Table 3-4: T700 Control Input Pin Assignments....39
Table 3-5: T700 Control Output Pin Assignments....41
Table 3-7: NIST Standards for CO_2....52
Table 3-8: NIST Standards for CO 53
Table 3-9: NIST Standards for H_2S 53
Table 3-10: NIST Standards for CH_4....53
Table 3-11: NIST Standards for O_2 53
Table 3-12: NIST Standards for SO_2....54
Table 3-13: NIST Standards for NO 54
Table 3-14: NIST Standards for Propane (C_3H_8)....54
Table 3-15: Operating Mode Valve States for T700 Calibrator with Optional O_3 Generator....61
Table 3-16: Operating Mode Valve States for T700 Calibrator with Optional O_3 Generator and Photometer....63
Table 3-17: Possible Warning Messages at Start-Up 75
Table 3-18: T700 Default Gas Types 78
Table 3-19: T700 Units of Measure List 85
Table 4-1: Calibrator Operating Modes....93
Table 4-2: Status of Internal Pneumatics During STANDBY Mode 94
Table 4-3: Test Functions Defined 97
Table 4-4: Status of Internal Pneumatics During GENERATE Mode....98
Table 4-5: Status of Internal Pneumatics During GENERATE > GPT Mode 107
Table 4-6: Status of Internal Pneumatics During GENERATE > GPTPS Mode 109
Table 4-7: Internal Pneumatics During Purge Mode 112
Table 4-8: Automatic Calibration SEQUENCE Set Up Attributes 115
Table 4-9: Calibration SEQUENCE Step Instruction....116
Table 4-10: Sequence Progress Reporting Mode....126
Table 4-11: Password Levels 141
Table 4-12: Variable Names (VARS)....144
Table 4-13: DIAG – Analog I/O Functions....147
Table 4-14: Test Channels Functions available on the T700's Analog Output....150
Table 4-15: Analog Output Voltage Range Min/Max....152
Table 4-16: Voltage Tolerances for the TEST CHANNEL Calibration 158
Table 5-1: COMM Port Communication Modes 172
Table 5-2: Ethernet Status Indicators....177
Table 5-3: LAN/Internet Configuration Properties 178
Table 6-1: Terminal Mode Software Commands....186
Table 6-2: Teledyne API Serial I/O Command Types 188
Table 7-1: Examples of MFC Calibration Points 195
Table 7-2: T700 Pressure Sensor Calibration Setup....215
Table 8-1: T700 Maintenance Schedule 220
Table 9-1: Warning Messages in Front Panel Display Param Field....233
Table 9-2: Test Functions – Indicated Failures 235
Table 9-3: Test Channel Outputs as Diagnostic Tools....238
Table 9-4: Relay PCA Watchdog LED Failure Indications 239

Table 9-5: Relay PCA Status LED Failure Indications 240
Table 9-6: Valve Driver Board Watchdog LED Failure Indications 241
Table 9-7: Relay PCA Status LED Failure Indications 241
Table 9-8: DC Power Test Point and Wiring Color Codes 243
Table 9-9: DC Power Supply Acceptable Levels....................244
Table 9-10: Relay PCA Control Devices 245
Table 9-11: Analog Output Test Function – Nominal Values Voltage Outputs 249
Table 9-12: Status Outputs Check 250
Table 9-13: T700 Control Input Pin Assignments and Corresponding Signal I/O Functions 251
Table 9-14: Control Outputs Pin Assignments and Corresponding Signal I/O Functions Check 252
Table 10-1: Relay PCA Status LEDs....................275
Table 10-2: T700 Photometer Measurement / Reference Cycle....................288

LIST OF APPENDICES

APPENDIX A – MENU TREES and RELATED SOFTWARE DOCUMENTATION

APPENDIX B - T700 SPARE PARTS LIST

APPENDIX C - REPAIR QUESTIONNAIRE

APPENDIX D - ELECTRONIC SCHEMATICS

1. INTRODUCTION

This section provides an overview of the Model T700 calibrator, its features, and its options.

1.1. T700 CALIBRATOR OVERVIEW

The Model T700 (typically referred to as T700) is a microprocessor-controlled calibrator for precision gas calibrators. Using a combination of highly accurate mass flow controllers and compressed sources of standard gases, calibration standards are provided for multipoint span and zero checks. Up to four gas sources may be used.

The T700 can be equipped with an optional built-in, programmable ozone generator for accurate, dependable ozone calibrations. The T700 also produces NO_2 when blended with NO gas in the internal GPT chamber. A multi-point linearization curve is used to control the generator to assure repeatable ozone concentrations. An optional photometer allows precise control of the ozone generator, both during calibrations and during Gas Phase Titrations (GPT). To ensure accurate NO_2 output, the calibrator with photometer option measures the ozone concentration prior to doing a GPT.

As many as 50 independent calibration sequences may be programmed into the T700, covering time periods of up to one year. The setup of sequences is simple and intuitive. These sequences may be actuated manually, automatically, or by a remote signal. The sequences may be uploaded remotely, including remote editing. All programs are maintained in non-volatile memory.

The T700 design emphasizes fast response, repeatability, overall accuracy and ease of operation. It may be combined with the Model 701 Zero Air Generator to provide the ultimate in easy-to-use, precise calibration for your gas calibrators.

1.2. FEATURES

Some of the exceptional features of your T700 Dynamic Dilution Calibrator are:

- Advanced T-Series electronics
- LCD color graphics display with touch screen interface
- Microprocessor control for versatility
- Bi-directional USB (optional), RS-232, optional RS-485, and 10/100Base-T Ethernet for remote operation
- Precise calibration gas generation for Ozone, NO, NO_2, CO, HC, H_2S, SO_2
- 12 independent timers for sequences
- Nested sequences (up to 5 levels)

- Software linearization of Mass Flow Controllers (MFC)
- 4 calibration gas ports configurable for single or multi-blend gases
- Optional 3rd MFC for wide dynamic range
- Optional gas phase titration (GPT) chamber
- Optional ozone generator and photometer to allow use as primary or transfer standard
- Inlets for external ozone reference sources

1.3. OPTIONS

The options available for your analyzer are presented in Table 1-1 with name, option number, a description and/or comments, and if applicable, cross-references to technical details in this manual, such as setup and calibration. To order these options or to learn more about them, please contact the Sales Department of Teledyne API at:

TOLL-FREE:	800-324-5190
PHONE:	+1 858-657-9800
FAX:	+1 858-657-9816
EMAIL:	apisales@teledyne.com
WEBSITE:	http://www.teledyne-api.com/

Table 1-1: Calibrator Options

Option	Option Number	Description/Notes	Reference
Flow Options		**For mass flow control (MFC)**	
	7A	Source MFC 0-50 CC/MIN (Replaces 0-100 CC/MIN)	Section 3.3.2.6
	7B	Source MFC 0-200 CC/MIN (Replaces 0-100 CC/MIN)	
	8A	Diluent MFC 0-5 SLPM (Replaces 0-10 SLPM)	
	8B	Diluent MFC 0-20 SLPM (Replaces 0-10 SLPM)	
	9	Third MFC (Can only be on source)	
Calibration Options		**Gas generators**	
	1A	Internal Ozone (O_3) Generator with Optical Feedback and GPT Mixing Chamber	Section 3.3.2.6
	2A	UV Photometer Module (to increase accuracy of O_3 Generator, Option 1A)	Section 3.3.2.6
	5	Permeation Tube Oven	Section 3.3.3
	73	Dual Gas Output (NOy – special)	Section 3.3.4 Figure 3-32
Rack Mounting		**For mounting the analyzer in standard 19" racks**	
	20A	Rack mount brackets with 26 in. (660 mm) chassis slides	N/A
	20B	Rack mount brackets with 24 in. (610 mm) chassis slides	N/A
	21	Rack mount brackets only	N/A

Option	Option Number	Description/Notes		Reference
		CAUTION – GENERAL SAFETY HAZARD **THE T700 CALIBRATOR WEIGHS CLOSE TO 18 KG (40 POUNDS) WITH ALL OPTIONS. TO AVOID PERSONAL INJURY WE RECOMMEND THAT TWO PERSONS LIFT AND CARRY IT BUT FIRST DISCONNECTING ALL CABLES AND TUBING FROM THE CALIBRATOR BEFORE MOVING IT.**		
Parts Kits		**Spare parts and expendables for 1-year operation**		
	46A	Kit, Spares for One Unit		(Technical Support)
	46B	Photometer Kit, Spares for One Unit		(Technical Support)
	46C	Photometer W/ IZS Spares Kit For 1 Unit		(Technical Support)
Communications		**For remote serial, network and Internet communication with the analyzer.**		
Cables		Type	Description	
	60A	RS-232	Shielded, straight-through DB-9F to DB-25M cable, about 1.8 m long. Used to interface with older computers or code activated switches with DB-25 serial connectors.	Section 3.3.1.7
	60B	RS-232	Shielded, straight-through DB-9F to DB-9F cable of about 1.8 m length.	Section 3.3.1.7
	60C	Ethernet	Patch cable, 2 meters long, used for Internet and LAN communications.	Section 3.3.1.7, 4.7.2, and 5.4
	60D	USB	Cable for direct connection between instrument (rear panel USB port) and personal computer.	Section 3.3.1.7
USB Port	64A	For rear panel connection to personal computer.		Sections 4.7 and 5.4.3
RS-232 Multidrop	62	Multidrop/LVDS card seated on the analyzer's CPU card. Each instrument in the multidrop network requres this card and a communications cable (Option 60B).		Sections 3.3.1.7 and 4.7.3
External Valve Driver Capability - For driving up to eight, 8-watt valves				
	48A	12V External Valve Driver - LEADS		Section 3.3.1.6
	48B	24V External Valve Driver - LEADS		
	48C	12V External Valve Driver - without Power Supply Module		
	48D	24V External Valve Driver - without Power Supply Module		
	48E	12V External Valve Driver - with Power Supply Module		
	48F	24V External Valve Driver - with Power Supply Module		
NIST Traceable, Primary Standard Certification for use as a Primary Ozone Standard if purchased with the O_3 generator and photometer options, 1A and 2A, respectively.				
	95A	Factory Calibration		Section 3.3.2.2
	95B	Calibration as a Primary Standard		
	95C	Calibration to NIST-SRP		
For this application the T700 Dynamic Dilution Calibrator's performance is calibrated to Standard Reference Photometer (SRP). Calibrators ordered with this option are verified and validated in accordance with procedures prescribed by the U.S. Environmental Protection Agency (EPA) under Title 40 of the Code of Federal Regulations, Part 50, Appendix D.				

Option	Option Number	Description/Notes	Reference
Special Features		**Built in features, software activated**	
	N/A	**Maintenance Mode Switch**, located inside the instrument, places the analyzer in maintenance mode where it can continue sampling, yet ignore calibration, diagnostic, and reset instrument commands. This feature is of particular use for instruments connected to Multidrop or Hessen protocol networks. Call Technical Support for activation.	N/A
	N/A	**Second Language Switch** activates an alternate set of display messages in a language other than the instrument's default language. Call Technical Support for a specially programmed Disk on Module containing the second language.	N/A

2. SPECIFICATIONS AND APPROVALS

2.1. SPECIFICATIONS

Table 2-1: T700 Dilution System Specifications

Parameter	Specification
Flow Measurement Accuracy	±1.0% of Full Scale
Repeatability of Flow Control	±0.2% of Full Scale
Linearity of Flow Measurement	±0.5% of Full Scale
Flow Range of Diluent Air	0 to 10 SLPM – Optional Ranges: 0 to 5 SLPM; 0 to 20 SLPM
Flow Range of Cylinder Gases	0 to 100 cc/min – Optional Ranges: 0 to 50 cc/min; 0 to 200 cc/min
Zero Air Required	10 SLPM @ 30 PSIG Optional: 20 SLPM @ 30 PSIG
CAL Gas Input Ports	4 (configurable)
Diluent Gas Input Ports	1
Response Time	60 Seconds (98%)

Table 2-2: T700 Dilution Electrical and Physical Specifications

Parameter	Specification	
AC Power	Rating	Typical Power Consumption
	100-240 V~ 50/60 Hz, 1.5 A	115 V: 76 W 230 V: 80 W
Analog Outputs	1 user configurable output	
Analog Output Ranges (Test Channel)	10V, 5V, 1V, 0.1V (selectable) Range with 5% under/over-range	
Analog Output Resolution	1 part in 4096 of selected full-scale voltage (12 bit)	
Standard I/O	1 Ethernet: 10/100Base-T 2 RS-232 (300 – 115,200 baud) 2 USB device ports 12 opto-isolated digital control outputs 12 opto-isolated digital control inputs 8 opto-isolated digital status outputs	
Optional I/O	1 USB com port 1 RS485 Multidrop RS232	
Operating Temperature Range	5-40ºC	
Humidity Range	0 - 95% RH, non-condensing	

Parameter	Specification
Environmental Conditions	Installation Category (Over Voltage Category) II Pollution Degree 2 Intended for Indoor Use Only at Altitudes ≤ 2000m
Materials	Cal Gas Output Wetted Surfaces: PTFE. Cal Gas Output Manifold: Glass-coated Steel
Dimensions (H x W x D)	7” x 17” x 24” (178 mm x 432 mm x 609 mm)
Weight	31 lbs (14.06 kg); 39.2 lbs (17.78 kg) with optional photometer, GPT, and O_3 generator

Table 2-3: T700 Specifications for Optional Ozone Generator

Parameter	Specification
Maximum Output	6 ppm LPM
Minimum Output	100 ppb LPM
Response Time:	180 seconds to 98%
Optical Feedback	Standard
Stability (7 days)	1% with photometer option 3% without photometer option
Linearity	1% with photometer option 3% without photometer option

Table 2-4: T700 Specifications for Optional O_3 Photometer

Parameter	Specification
Full Scale Range	100 ppb to 10 ppm ; User Selectable
Precision	1.0 ppb
Linearity	1.0% of reading
Rise/Fall Time	<20 sec (photometer response)
Response Time (95%)	180 sec. (system response)
Zero Drift	<1.0 ppb / 24 hours
Span Drift	<1% / 24 hours
Minimum Gas Flow Required	800 cc/min

2.2. APPROVALS AND CERTIFICATIONS

The Teledyne API Model T700 calibrator was tested and certified for Safety and Electromagnetic Compatibility (EMC). This section presents the compliance statements for those requirements and directives.

2.2.1. SAFETY

IEC 61010-1:2001

CE: 2006/95/EC, Low-Voltage Directive

2.2.2. **EMC**

EN 61326-1 (IEC 61326-1), Class A Emissions/Industrial Immunity

EN 55011 (CISPR 11), Group 1, Class A Emissions
FCC 47 CFR Part 15B, Class A Emissions
CE: 2004/108/EC, Electromagnetic Compatibility Directive

2.2.3. **OTHER TYPE CERTIFICATIONS**

For additional certifications, please contact Technical Support.

This page intentionally left blank.

3. GETTING STARTED

This section addresses the procedures for unpacking the instrument and inspecting for damage, presents clearance specifications for proper ventilation, introduces the instrument layout, then presents the procedures for getting started: making electrical and pneumatic connections, and conducting an initial calibration check.

3.1. UNPACKING AND INITIAL SETUP

CAUTION – RISK of Personal Injury

THE T700 WEIGHS ABOUT 18 KG (40 POUNDS) WITHOUT OPTIONS INSTALLED. TO AVOID PERSONAL INJURY, WE RECOMMEND USING TWO PERSONS TO LIFT AND CARRY THE CALIBRATOR.

ATTENTION

COULD DAMAGE INSTRUMENT AND VOID WARRANTY

Printed Circuit Assemblies (PCAs) are sensitive to electro-static discharges too small to be felt by the human nervous system. Failure to use ESD protection when working with electronic assemblies will void the instrument warranty. For more information on preventing ESD damage see *A Primer on Electro-Static Discharge*; the manual can be downloaded from our website at http://www.teledyne-api.com under Help Center > Product Manuals in the Special Manuals section.

CAUTION – Avoid Damage to the Instrument

BEFORE operating instrument, remove dust plugs from pneumatic ports.

Note

Teledyne API recommends that you store shipping containers/materials for future use if/when the instrument should be returned to the factory for repair and/or calibration service. See Warranty section in this manual and shipping procedures on our Website at http://www.teledyne-api.com under Customer Support > Return Authorization.

WARNING!

NEVER DISCONNECT ELECTRONIC CIRCUIT BOARDS, WIRING HARNESSES OR ELECTRONIC SUBASSEMBLIES WHILE THE UNIT IS UNDER POWER.

1. Inspect the received packages for external shipping damage. If damaged, please advise the shipper first, then Teledyne API.
2. Included with your calibrator is a printed record of the final performance characterization performed on your instrument at the factory. This record, titled *Final Test and Validation Data Sheet* (P/N 05731) is an important quality assurance and calibration record for this instrument. It should be placed in the quality records file for this instrument.
3. Carefully remove the top cover of the calibrator and check for internal shipping damage.
    - Remove the locking screw located in the top, center of the Front panel.
    - Remove the two screws fastening the top cover to the unit (one per side towards the rear).
    - Slide the cover backwards until it clears the calibrator's front bezel.
    - Lift the cover straight up.
4. Inspect the interior of the instrument to ensure all circuit boards and other components are in good shape and properly seated.
5. Check the connectors of the various internal wiring harnesses and pneumatic hoses to ensure they are firmly and properly seated.
6. Verify that all of the optional hardware ordered with the unit has been installed. These are checked on the paperwork accompanying the calibrator.

3.1.1. VENTILATION CLEARANCE

Whether the calibrator is set up on a bench or installed into an instrument rack, be sure to leave sufficient ventilation clearance.

AREA	MINIMUM REQUIRED CLEARANCE
Behind the instrument	10 cm / 4 inches
Sides of the instrument	2.5 cm / 1 inch
Above and below the instrument.	2.5 cm / 1 inch

Various rack mount kits are available for this calibrator. See Table 1-1 of this manual for more information.

3.2. CALIBRATOR LAYOUT

Figure 3-1 shows the calibrator's front panel layout, followed by a close-up of the display/touchscreen in Figure 3-2 and description in Table 3-1. The two USB ports on the front panel are provided for the connection of peripheral devices:

- plug-in mouse (not included) to be used as an alternative to the touchscreen interface
- thumb drive (not included) to download updates to instruction software (contact T-API Technical Support for information).

3.2.1. **FRONT PANEL**

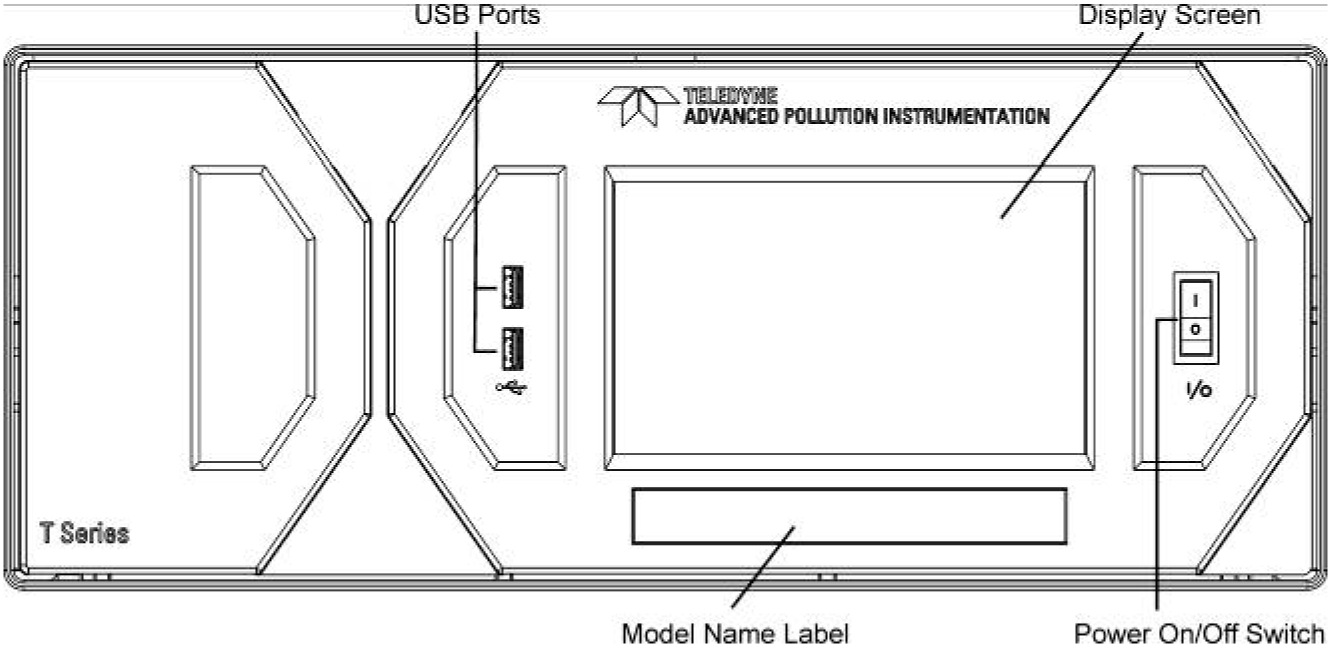
USB Ports
Display Screen
TELEDYNE
ADVANCED POLLUTION INSTRUMENTATION
I
O
I/O
T Series
Model Name Label
Power On/Off Switch

Figure 3-1: T700 Front Panel Layout

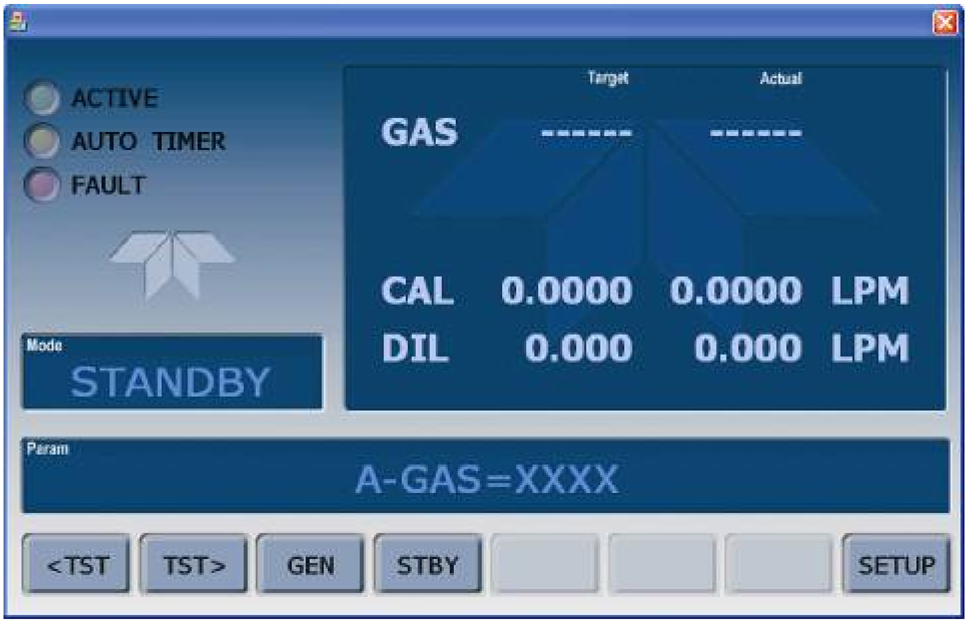
ACTIVE
AUTO TIMER
FAULT
Mode
STANDBY
Target
Actual
GAS

CAL
0.0000
0.0000
LPM
DIL
0.000
0.000
LPM
Param
A-GAS=XXXX
<TST
TST>
GEN
STBY
SETUP

Figure 3-2: Display Screen and Touch Control

The front panel liquid crystal display (LCD) screen includes touch control. Upon calibrator start-up, the LCD shows a splash screen and other initialization indicators before the main display appears, similar to Figure 3-2 above.

CAUTION – Avoid Damaging Touchscreen
Do not use hard-surfaced instruments such as pens to operate the touch screen buttons.

Table 3-1: Display Screen and Touch Control Description

Field	Description/Function			
LEDs indicating the states of the calibrator:				
	Name	Color	State	Definition
	Active	Green	off	Unit is operating in STANDBY mode. This LED is lit when the instrument is actively producing calibration gas (GENERATE mode).
	Auto Timer	Yellow	off	This LED is lit only when the calibrator is performing an automatic calibration sequence.
	Fault	Red	blinking	The calibrator is warming up and therefore many of its subsystems are not yet operating within their optimum ranges. Various warning messages may appear in the Param field.
Target/ Actual	Gas concentrations, Cal gas MFC and Diluent MFC values with unit of measure			
Mode	Displays the name of the calibrator’s current operating mode (default is STANDBY at initial startup).			
Param	Displays a variety of informational messages such as warning messages, operational data, test function values and response messages during interactive tasks.			
Touchscreen control: row of eight buttons with dynamic, context sensitive labels; buttons are blank when inactive/inapplicable.				

Figure 3-3 shows how the front panel display is mapped to the menu charts that are illustrated throughout this manual. The Mode, Param (parameters), and Target/Actual (gas concentration) fields in the display screen are represented across the top row of each menu chart. The eight touch control buttons along the bottom of the display screen are represented in the bottom row of each menu chart.

Menu Chart Layout

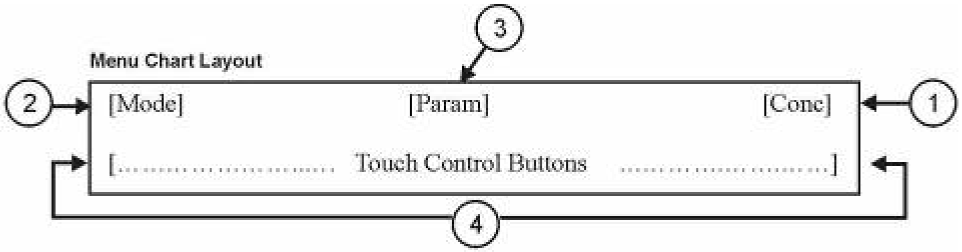
3
2
1
4
[Mode]
[Param]
[Conc]
[.......................... Touch Control Buttons ....]

Display Example:

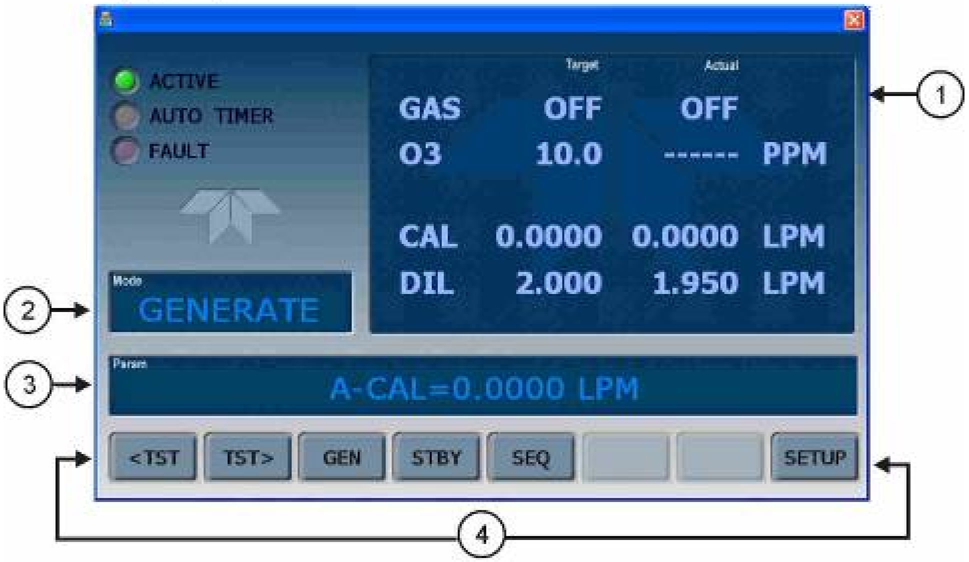
ACTIVE
AUTO TIMER
FAULT
Target
Actual
GAS OFF OFF
O3 10.0 ------ PPM
CAL 0.0000 0.0000 LPM
DIL 2.000 1.950 LPM
Mode
GENERATE
Param
A-CAL=0.0000 LPM
<TST
TST>
GEN
STBY
SEQ
SETUP
1
2
3
4

Menu Chart Representing Display Example:

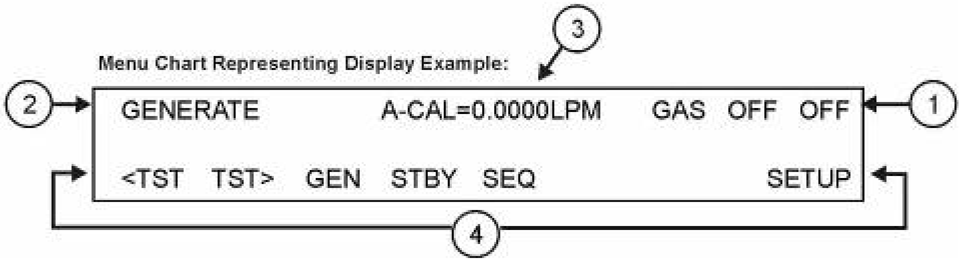
3
2
1
4
GENERATE
A-CAL=0.0000LPM
GAS OFF OFF
<TST
TST>
GEN
STBY
SEQ
SETUP

Figure 3-3: Display/Touch Control Screen Mapped to Menu Charts

3.2.2. **REAR PANEL**

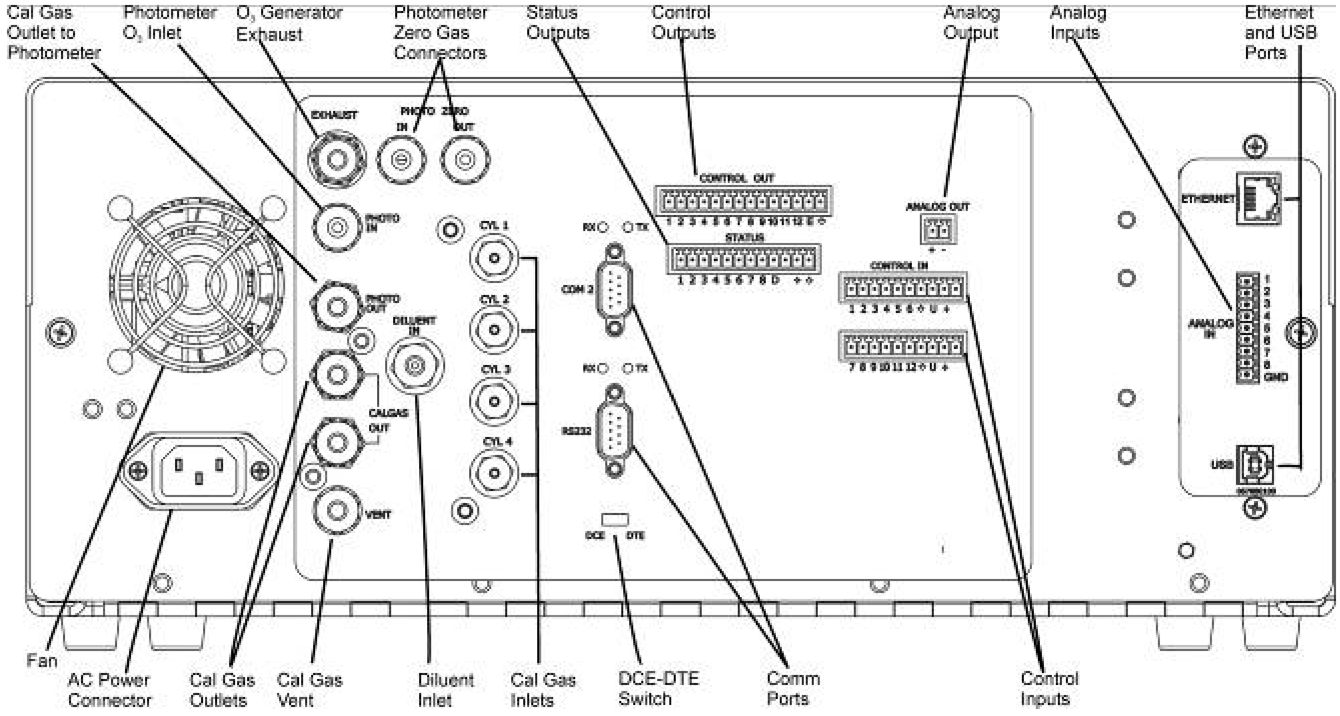
Cal Gas Outlet to Photometer
Photometer O$_3$ Inlet
O$_3$ Generator Exhaust
Photometer Zero Gas Connectors
Status Outputs
Control Outputs
Analog Output
Analog Inputs
Ethernet and USB Ports
EXHAUST
PHOTO ZERO
IN
OUT
PHOTO IN
PHOTO OUT
DILUENT IN
CALGAS OUT
VENT
CYL 1
CYL 2
CYL 3
CYL 4
RX TX
COM 2
RX TX
RS232
DCE DTE
CONTROL OUT
STATUS
ANALOG OUT
CONTROL IN
ETHERNET
ANALOG IN
USB
Fan
AC Power Connector
Cal Gas Outlets
Cal Gas Vent
Diluent Inlet
Cal Gas Inlets
DCE-DTE Switch
Comm Ports
Control Inputs

Figure 3-4: T700 Rear Panel Layout

Table 3-2 provides a description of each component on the rear panel.

Table 3-2: Rear Panel Description

Component	Function
Fan	Cools instrument by pulling ambient air into chassis through side vents and exhausting through rear.
⚠ **AC Power Connector**	Connector for three-prong cord to apply AC power to the analyzer **CAUTION! The cord's power specifications (specs) MUST comply with the power specs on the calibrator's rear panel Model number label.**
⚠ **EXHAUST (option)**	Exhaust gas from ozone generator and photometer **CAUTION! Exhaust gas must be vented outside.**
PHOTOMETER INLET (Photometer option)	Measurement gas input for O_3 photometer
PHOTOMETER OUTLET (Photometer option)	Calibration gas outlet to O_3 photometer
PHOTO ZERO IN (Photometer option)	Inlet for photometer Zero Gas
PHOTO ZERO OUT (Photometer option)	Outlet for photometer Zero Gas
DILUENT IN	Diluent or zero air gas inlet.
CALGAS OUT	Outlets for calibration gas
VENT	Vent port for output manifold
CYL 1 thru CYL 4	Inlets for up to 4 calibration gases.
COM 2	Serial communications port for RS-232 or RS-485.
RX TX	LEDs indicate receive (RX) and transmit (TX) activity on the when blinking.
RS-232	Serial communications port for RS-232 only.
DCE DTE	Switch to select either data terminal equipment or data communication equipment during RS-232 communication. (Section 5.1)
CONTROL OUT	For outputs to devices such as Programmable Logic Controllers (PLCs).
STATUS	For outputs to devices such as Programmable Logic Controllers (PLCs).
ANALOG OUT	For voltage or current loop outputs to a strip chart recorder and/or a data logger.
CONTROL IN	For remotely activating the zero and span calibration modes.
ETHERNET	Connector for network or Internet remote communication, using Ethernet cable.
(optional) USB	Connector for direct connection to a personal computer, using USB cable.
Label w/power specs	Identifies the analyzer model number and lists voltage and frequency specifications.

3.2.3. INTERNAL LAYOUT

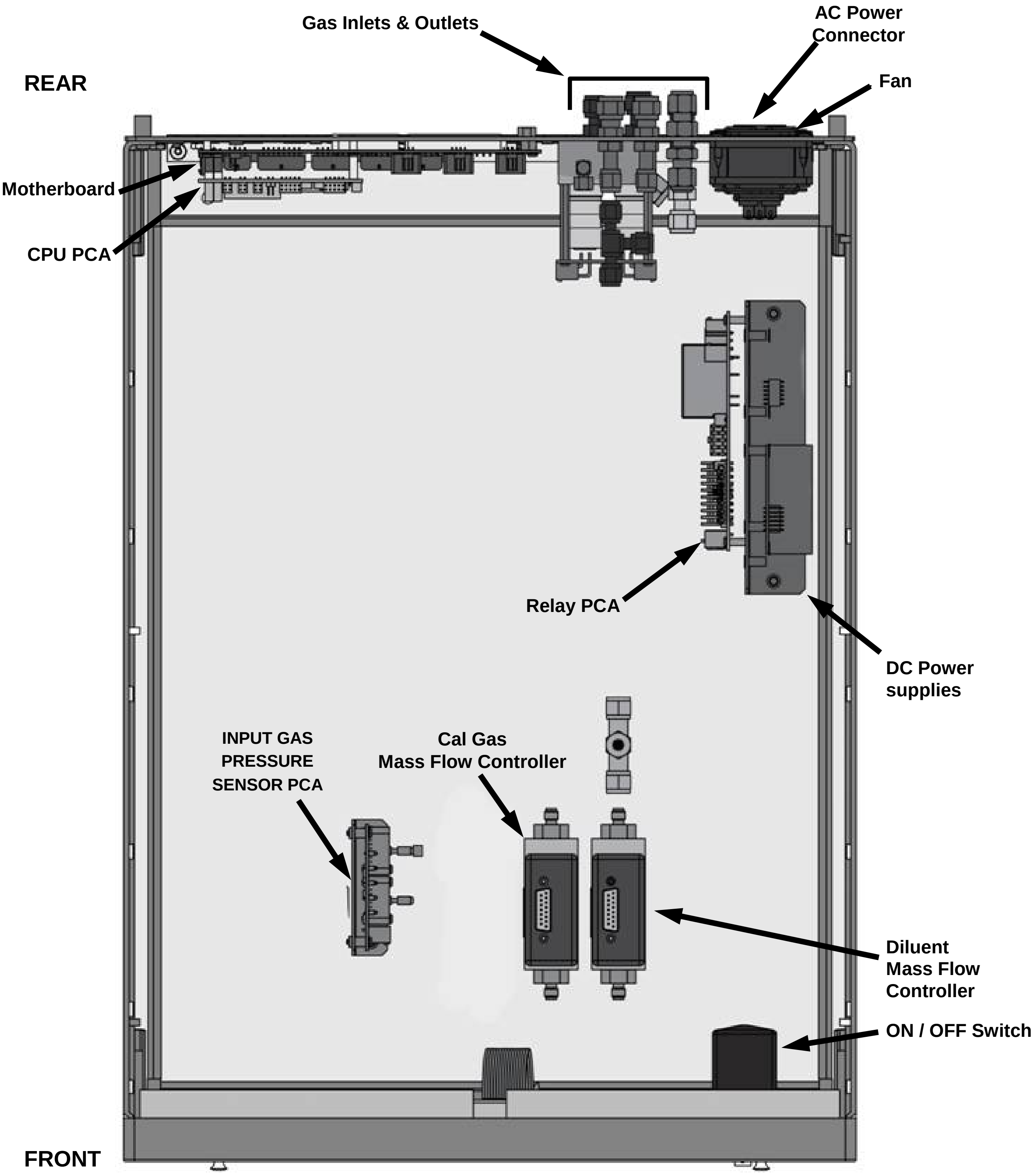
Gas Inlets & Outlets
AC Power Connector
REAR
Fan
Motherboard
CPU PCA
Relay PCA
DC Power supplies
INPUT GAS PRESSURE SENSOR PCA
Cal Gas Mass Flow Controller
Diluent Mass Flow Controller
ON / OFF Switch
FRONT

Figure 3-5: T700 Internal Layout – Top View – Base Unit

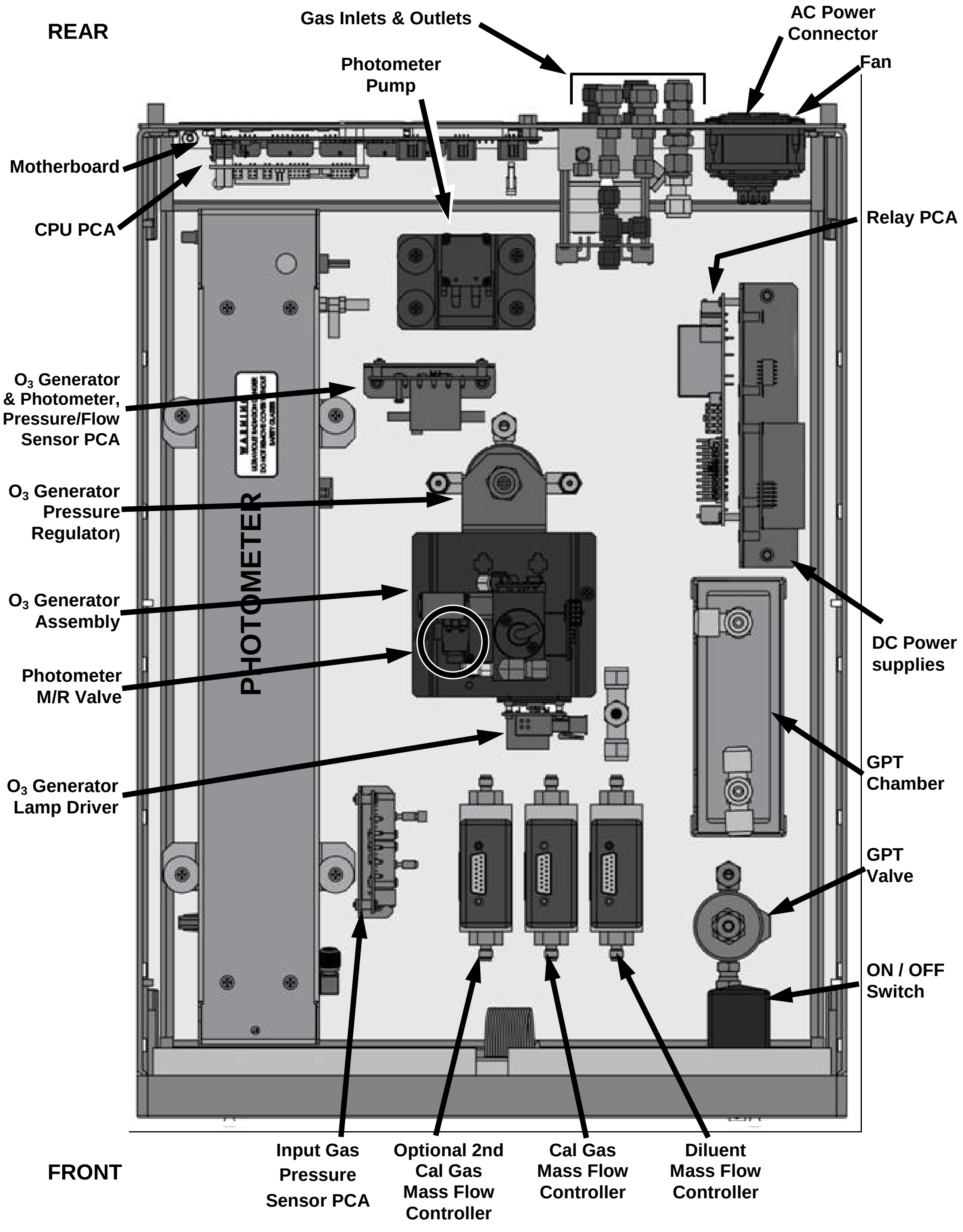
REAR
Gas Inlets & Outlets
AC Power Connector
Photometer Pump
Fan
Motherboard
CPU PCA
Relay PCA
O_3 Generator & Photometer, Pressure/Flow Sensor PCA
WARNING
O_3 Generator Pressure Regulator)
PHOTOMETER
O_3 Generator Assembly
Photometer M/R Valve
DC Power supplies
O_3 Generator Lamp Driver
GPT Chamber
GPT Valve
ON / OFF Switch
FRONT
Input Gas Pressure Sensor PCA
Optional 2nd Cal Gas Mass Flow Controller
Cal Gas Mass Flow Controller
Diluent Mass Flow Controller

Figure 3-6: T700 Internal Layout – Top View – with Optional O_3 Generator and Photometer

3.3. CONNECTIONS AND SETUP

This section presents the electrical (Section 3.3.1) and pneumatic (Section 3.3.2) connections for setup and preparing for instrument operation.

3.3.1. ELECTRICAL CONNECTIONS

Note **To maintain compliance with EMC standards, it is required that the cable length be no greater than 3 meters for all I/O connections, which include Analog In, Analog Out, Status Out, Control In, Ethernet/LAN, USB, RS-232, and RS-485.**

3.3.1.1. Connecting Power

Attach the power cord to the calibrator and plug it into a power outlet capable of carrying at least 10 A current at your AC voltage and that it is equipped with a functioning earth ground.

WARNING – ELECTRICAL SHOCK HAZARD

- **HIGH VOLTAGES ARE PRESENT INSIDE THE CALIBRATORS CASE.**
- **POWER CONNECTION MUST HAVE FUNCTIONING GROUND CONNECTION.**
- **DO NOT DEFEAT THE GROUND WIRE ON POWER PLUG.**
- **TURN OFF CALIBRATOR POWER BEFORE DISCONNECTING OR CONNECTING ELECTRICAL SUBASSEMBLIES.**
- **DO NOT OPERATE WITH COVER OFF.**

CAUTION – AVOID PERSONAL INJURY

DO NOT LOOK AT THE PHOTOMETER UV LAMP; UV LIGHT CAN CAUSE EYE DAMAGE.

ALWAYS WEAR GLASSES MADE FROM SAFETY UV FILTERING GLASS (PLASTIC GLASSES ARE INADEQUATE).

Note **The T700 calibrator is equipped with a universal power supply that allows it to accept any AC power configuration, within the limits specified in Table 2-2.**

3.3.1.2. Connecting Analog Outputs

The T700 is equipped with an analog output channel accessible through a connector on the back panel of the instrument. The standard configuration for this output is 0-5 VDC. It can be set by the user to output one of a variety of diagnostic test functions (see Section 4.10.1.2).

To access these signals attach a strip chart recorder and/or data-logger to the appropriate analog output connections on the rear panel of the calibrator.

Pin-outs for the analog output connector at the rear panel of the instrument are:

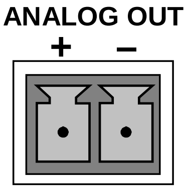

Figure 3-7: T700 Analog Output Connector

3.3.1.3. Connecting the Status Outputs

The status outputs report calibrator conditions via optically isolated NPN transistors, which sink up to 50 mA of DC current. These outputs can be used to interface with devices that accept logic-level digital inputs, such as Programmable Logic Controllers (PLCs). Each Status bit is an open collector output that can withstand up to 40 VDC. All emitters of these transistors are tied together and available at pin D (Figure 3-8).

ATTENTION

COULD DAMAGE INSTRUMENT AND VOID WARRANTY

Most PLC's have internal provisions for limiting the current that the input will draw from an external device. When connecting to a unit that does not have this feature, an external dropping resistor must be used to limit the current through the transistor output to less than 50 mA. At 50 mA, the transistor will drop approximately 1.2V from its collector to emitter.

The status outputs are accessed via a 12-pin connector on the calibrator's rear panel labeled STATUS. The function of each pin is defined in Table 3-3.

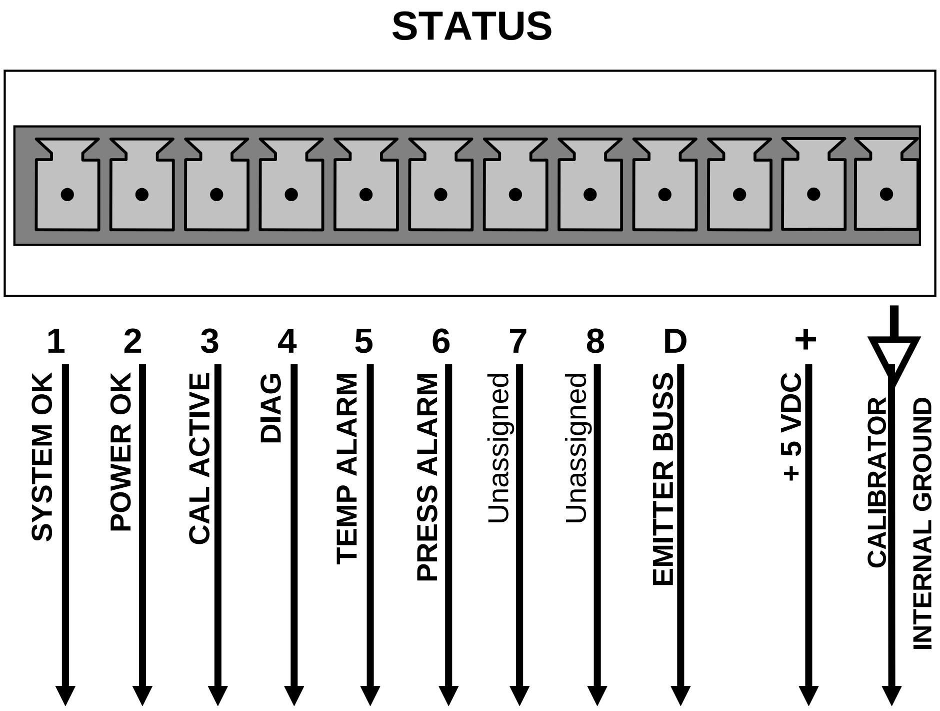
STATUS
1
2
3
4
5
6
7
8
D
+
SYSTEM OK
POWER OK
CAL ACTIVE
DIAG
TEMP ALARM
PRESS ALARM
Unassigned
Unassigned
EMITTER BUSS
+ 5 VDC
CALIBRATOR
INTERNAL GROUND

Figure 3-8: Status Output Connector

The pin assignments for the Status Outputs are:

Table 3-3: Status Output Pin Assignments

OUTPUT #	STATUS DEFINITION	CONDITION
1	SYSTEM OK	On if no faults are present.
2	POWER OK	On if no faults are present.
3	CAL ACTIVE	On if the calibrator is in **GENERATE** mode.
4	DIAG	On if the calibrator is in **DIAGNOSTIC** mode.
5	TEMP ALARM	On whenever a temperature alarm is active.
6	PRESS ALARM	On whenever gas pressure alarm is active.
7 & 8	Unassigned	
D	Emitter BUS	The emitters of the transistors on pins 1 to 8 are bussed together.
(blank)	(blank)	Not Used
+	DC POWER	+ 5 VDC
⏚	Digital Ground	The ground level from the calibrator’s internal DC power supplies.

3.3.1.4. **Connecting the Control Inputs**

The calibrator is equipped with 12 digital control inputs that can be used to initiate various user-programmable calibration sequences (see Section 4.3.1.5 for instructions on assigning the control inputs to specific calibration sequences).

Access to these inputs is via two separate 10-pin connectors, labeled CONTROL IN, that are located on the calibrator's rear panel.

Table 3-4: T700 Control Input Pin Assignments

CONNECTOR	INPUT	DESCRIPTION
Top	**1 to 6**	Can be used as either 6, separate on/off switches or as bits 1 through 6 of a 12-bit wide binary activation code.
Bottom	**7 to 12**	Can be used as either 6, separate on/off switches or as bits 7 through 12 of a 12-bit wide binary activation code.
BOTH	⏚	Chassis ground.
Top	**U**	Input pin for +5 VDC required to activate pins 1 – 6. This can be from an external source or from the "+" pin of the connector.
Bottom	**U**	Input pin for +5 VDC required to activate pins 7 – 12. This can be from an external source or from the "+" pin of the connector.
BOTH	**+**	Internal source of +5V used to actuate control inputs when connected to the U pin.

There are two methods for energizing the control inputs. The internal +5V available from the pin labeled “+” is the most convenient method. However, if full isolation is required, an external 5 VDC power supply should be used.

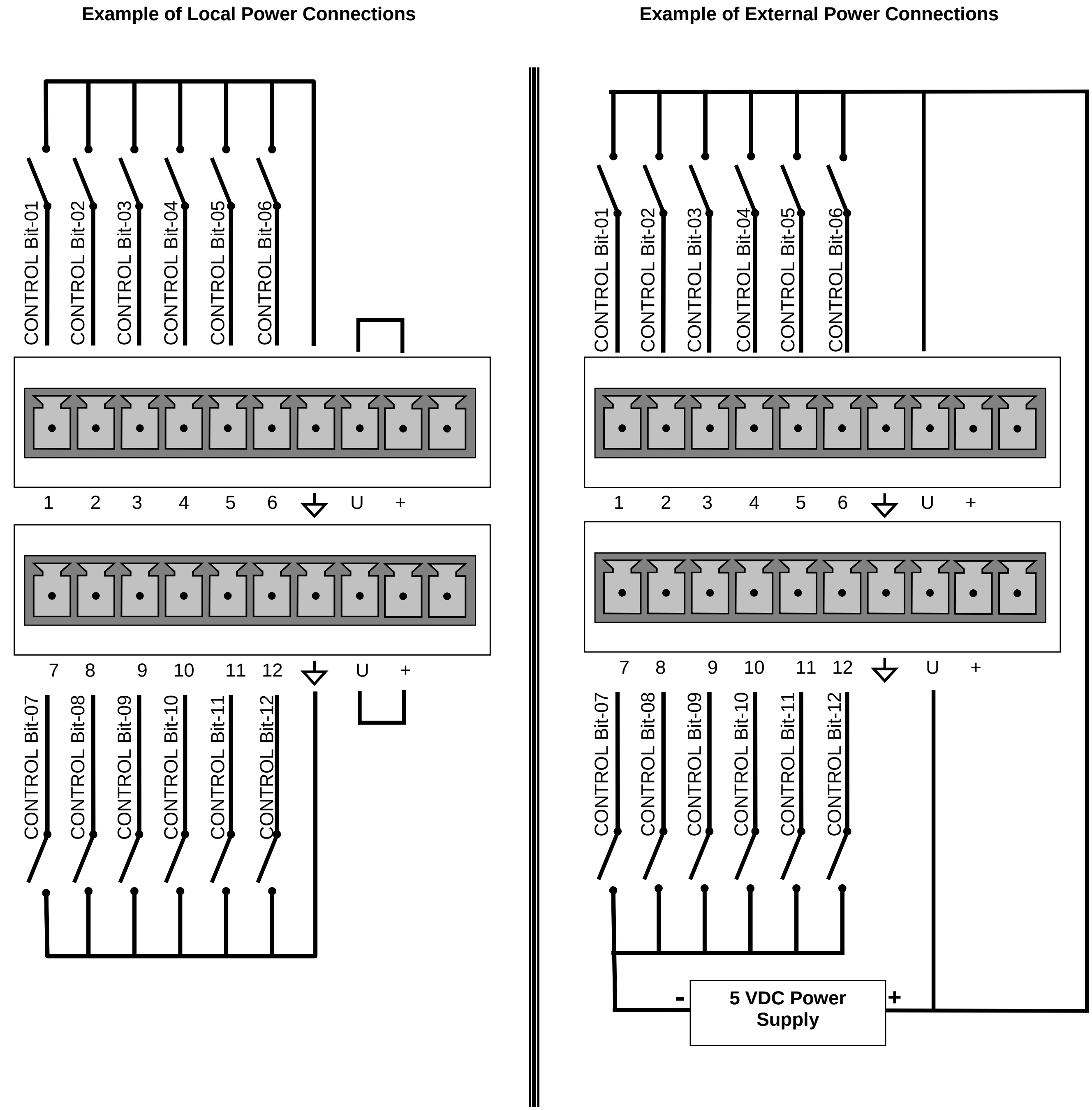
Example of Local Power Connections

Example of External Power Connections

CONTROL Bit-01
CONTROL Bit-02
CONTROL Bit-03
CONTROL Bit-04
CONTROL Bit-05
CONTROL Bit-06
1
2
3
4
5
6
U
+
7
8
9
10
11
12
U
+
CONTROL Bit-07
CONTROL Bit-08
CONTROL Bit-09
CONTROL Bit-10
CONTROL Bit-11
CONTROL Bit-12
-
5 VDC Power Supply
+

Figure 3-9: T700 Digital Control Input Connectors

3.3.1.5. **Connecting the Control Outputs**

The calibrator is equipped with 12 opto-isolated, digital control outputs. These outputs are activated by the T700's user-programmable calibration sequences (see Sections 4.3.1.6 and 4.3.2.8 for instructions on assigning the control inputs to specific calibration sequences).

These outputs may be used to interface with devices that accept logic-level digital inputs, such as Programmable Logic Controllers (PLCs), data loggers, or digital relays/valve drivers.

They are accessed via a 14-pin connector on the calibrator's rear panel (see Figure 3-4).

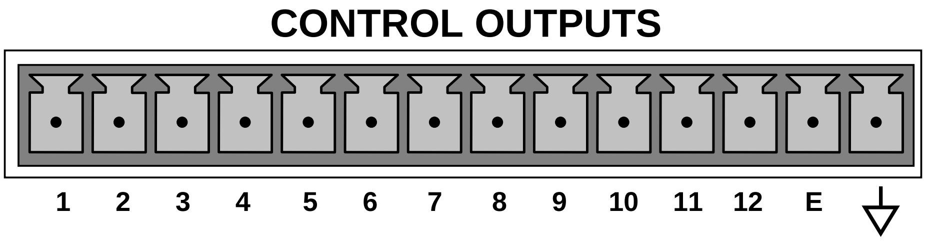

Figure 3-10: T700 Digital Control Output Connector

ATTENTION

COULD DAMAGE INSTRUMENT AND VOID WARRANTY

Most PLCs have internal provisions for limiting the current the input will draw. When connecting to a unit that does not have this feature, external resistors must be used to limit the current through the individual transistor outputs to ≤50mA (120 Ω for 5V supply).

The pin assignments for the control outputs are:

Table 3-5: T700 Control Output Pin Assignments

PIN #	STATUS DEFINITION	CONDITION
1 - 12	Outputs 1 through 12 respectively	Closed if the sequence or sequence step activating output is operating
E	Emitter BUS	The emitters of the transistors on pins 1 to 12 are bussed together.
⏚	Digital Ground	The ground level from the calibrator's internal DC power supplies.

3.3.1.6. Connecting the External Valve Driver Option

Any of six external valve driver assemblies, 12V or 24V (options listed in Table 3-6), are available that can drive up to eight 8-watt valves based on the condition of the status block bits described below. The option consists of a custom Printed Circuit Assembly (PCA) that mounts to the back of the T700 with or without a universal AC-to-DC power supply module (PSM).

The Valve Driver Outputs are mapped one-for-one to the Control Outputs 1 through 8 and can be manually actuated for troubleshooting using the Signal-I/O diagnostic function in the T700 software (see Section 9.4.11.5). However, the drive outputs are mapped in reverse to the status control bits such that Bit-0 (LSB) is valve drive 8 and Bit-7 is valve drive 1.

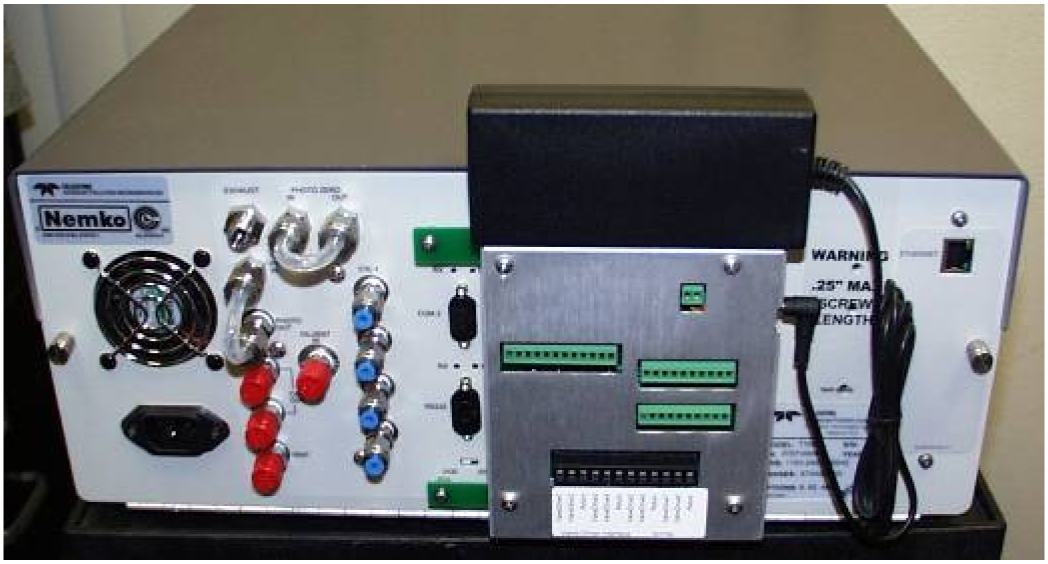

Figure 3-11: T700 Rear Panel Valve Driver Installed (with PSM connected to JP1)

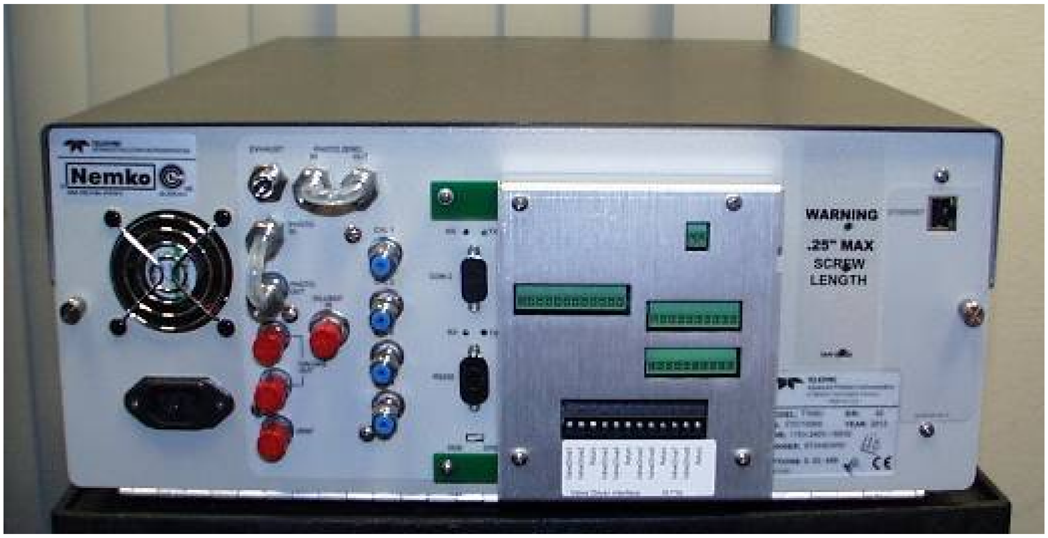

Figure 3-12: T700 Rear Panel Valve Driver Installed (without PSM)

Table 3-6: External Valve Driver Options

OPTION	DESCRIPTION	PART NUMBER
48A	12V External Valve Driver - LEADS with PSM	057090000
48B	24V External Valve Driver - LEADS with PSM	057090100
48C	12V External Valve Driver - without PSM	072210100
48D	24V External Valve Driver - without PSM	072210200
48E	12V External Valve Driver - with PSM	072210300
48F	24V External Valve Driver - with PSM	072210400

Depending upon the capacity of the external supply either four (standard) or eight valves can be simultaneously energized.

The PCA is constructed such that it plugs through the rear panel into the Control Output connector, J1008, on the T700’s motherboard.

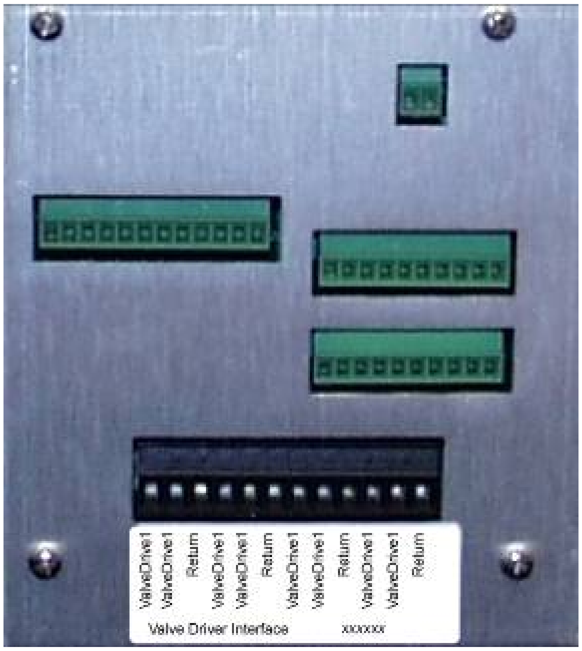
ValveDrive1
ValveDrive1
Return
ValveDrive1
ValveDrive1
Return
ValveDrive1
ValveDrive1
Return
ValveDrive1
ValveDrive1
Return
Valve Driver Interface
xxxxxx

Figure 3-13: Valve-Driver Interface

OPTIONS 48A AND 48B CONNECTIONS

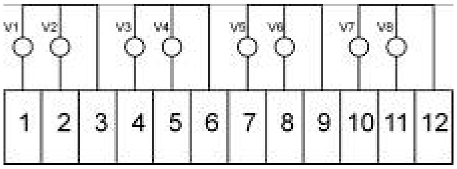
V1
V2
V3
V4
V5
V6
V7
V8
1
2
3
4
5
6
7
8
9
10
11
12

Figure 3-14: Options 48A & 48B Connections (LEADS)

OPTIONS 48C AND 48D CONNECTIONS

CAUTION

AVOID DAMAGE to valve driver board: Do NOT connect power supply to JP1 for Options 48C or 48D.

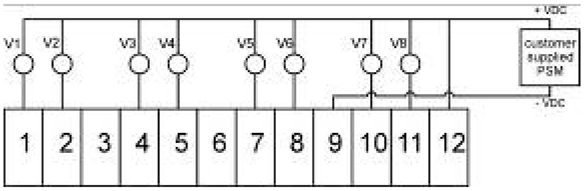

Figure 3-15: Options 48C & 48D Connections, Customer-supplied PSM to Pin 12 (+) & Pin 9 (-)

OPTIONS 48A AND 48B CONNECTIONS

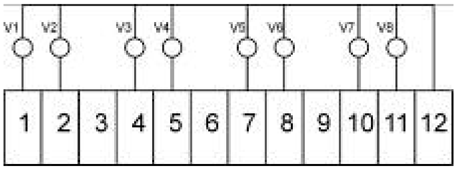

Figure 3-16: Options 48E & 48F Connections

3.3.1.7. **Connecting the Communications Interfaces**

The T-Series analyzers are equipped with connectors for remote communications interfaces: **Ethernet**, **USB**, **RS-232**, **RS-232 Multidrop** and **RS-485** (each described below). In addition to using the appropriate cables, each type of communication method must be configured using the SETUP>COMM menu (see Sections 4.7 and 5).

ETHERNET CONNECTION

For network or Internet communication with the analyzer, connect an Ethernet cable from the analyzer's rear panel Ethernet interface connector to an Ethernet port. Although the analyzer is shipped with DHCP enabled by default (Section 5.4), it should be manually assigned a static IP address.

Configuration: (manual, i.e., static) Section 5.4.1.1

USB (OPTION) CONNECTION

The USB option can be used for direct communication between the analyzer and a PC; connect a USB cable between the analyzer and computer USB ports (ensure baud rates match). A USB driver is required for complete configuration.

Note

If this option is installed, the COM2 port cannot be used for anything other than Multidrop communication.

Configuration: Section 5.4.3.

RS-232 CONNECTION

For **RS-232** communications with data terminal equipment (**DTE**) or with data communication equipment (**DCE**) connect either a DB9-female-to-DB9-female cable (Teledyne API part number WR000077) or a DB9-female-to-DB25-male cable (Option 60A), as applicable, from the analyzer's rear panel RS-232 port to the device. Adjust the DCE-DTE switch (Figure 3-4) to select DTE or DCE as appropriate (Section 5.1).

Configuration: Section 4.7.3

IMPORTANT

IMPACT ON READINGS OR DATA

Cables that appear to be compatible because of matching connectors may incorporate internal wiring that makes the link inoperable. Check cables acquired from sources other than Teledyne API for pin assignments (Figure 3-17) before using.

RS-232 COM PORT CONNECTOR PIN-OUTS

Electronically, the difference between the DCE and DTE is the pin assignment of the Data Receive and Data Transmit functions.

- DTE devices receive data on pin 2 and transmit data on pin 3.
- DCE devices receive data on pin 3 and transmit data on pin 2.

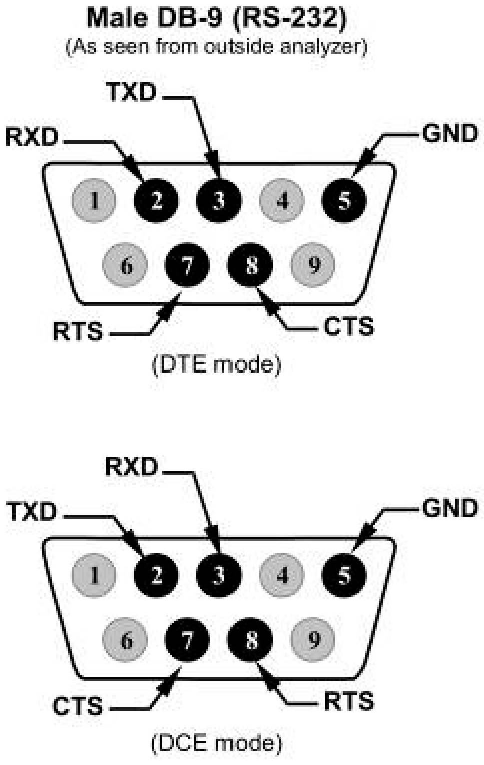
Male DB-9 (RS-232)
(As seen from outside analyzer)
TXD
RXD
GND
1
2
3
4
5
6
7
8
9
RTS
CTS
(DTE mode)
RXD
TXD
GND
1
2
3
4
5
6
7
8
9
CTS
RTS
(DCE mode)

Figure 3-17: Rear Panel Connector Pin-Outs for RS-232 Mode

The signals from these two connectors are routed from the motherboard via a wiring harness to two 10-pin connectors on the CPU card, J11 and J12 (Figure 3-18).

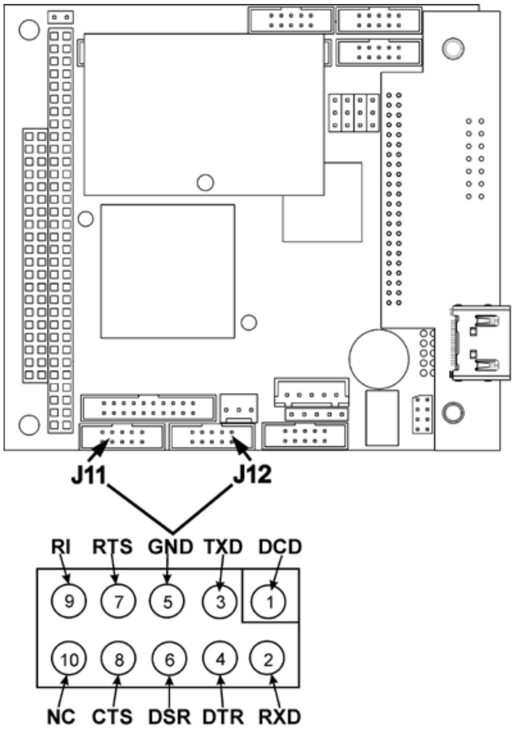

Figure 3-18: Default Pin Assignments for CPU COMM Port Connector (RS-232).

Teledyne API offers two mating cables, one of which should be applicable for your use.

- P/N WR000077, a DB-9 female to DB-9 female cable, 6 feet long. Allows connection of the serial ports of most personal computers.
- P/N WR000024, a DB-9 female to DB-25 male cable. Allows connection to the most common styles of modems (e.g. Hayes-compatible) and code activated switches.

Both cables are configured with straight-through wiring and should require no additional adapters.

Note

Cables that appear to be compatible because of matching connectors may incorporate internal wiring that makes the link inoperable. Check cables acquired from sources other than Teledyne API for pin assignments before using.

To assist in properly connecting the serial ports to either a computer or a modem, there are activity indicators just above the RS-232 port. Once a cable is connected between the analyzer and a computer or modem, both the red and green LEDs should be on.

- If the lights are not lit, locate the small switch on the rear panel to switch it between DTE and DCE modes.
- If both LEDs are still not illuminated, ensure that the cable properly constructed.

RS-232 COM PORT DEFAULT SETTINGS

Received from the factory, the analyzer is set up to emulate a DCE or modem, with Pin 3 of the DB-9 connector designated for receiving data and Pin 2 designated for sending data.

- **RS-232** (COM1): RS-232 (fixed) DB-9 male connector
  - **Baud rate**: 115200 bits per second (baud)
  - **Data Bits**: 8 data bits with 1 stop bit
  - **Parity**: None
- **COM2**: RS-232 (configurable to RS-485), DB-9 female connector
  - **Baud rate**: 19200 bits per second (baud)
  - **Data Bits**: 8 data bits with 1 stop bit
  - **Parity**: None

RS-232 MULTI-DROP (OPTION 62) CONNECTION

When the RS-232 Multidrop option is installed, connection adjustments and configuration through the menu system are required. This section provides instructions for the internal connection adjustments, then for external connections, and ends with instructions for menu-driven configuration.

Note

Because the RS-232 Multidrop option uses both the RS232 and COM2 DB9 connectors on the analyzer's rear panel to connect the chain of instruments, COM2 port is no longer available for separate RS-232 or RS-485 operation.

ATTENTION

COULD DAMAGE INSTRUMENT AND VOID WARRANTY

Printed Circuit Assemblies (PCAs) are sensitive to electro-static discharges too small to be felt by the human nervous system. Failure to use ESD protection when working with electronic assemblies will void the instrument warranty. For more information on preventing ESD damage, see *A Primer on Electro-Static Discharge;* the manual can be downloaded from our website at http://www.teledyne-api.com under Help Center > Product Manuals in the Special Manuals section.

In each instrument with the Multidrop option there is a shunt jumpering two pins on the serial Multidrop and LVDS printed circuit assembly (PCA), as shown in Figure 3-19. This shunt must be removed from all instruments except that designated as last in the multidrop chain, which must remain terminated. This requires powering off and opening each instrument and making the following adjustments:

1. With NO power to the instrument, remove its top cover and lay the rear panel open for access to the Multidrop/LVDS PCA, which is seated on the CPU.
2. On the Multidrop/LVDS PCA's JP2 connector, remove the shunt that jumpers Pins 21 ↔ 22 as indicated in Figure 3-19. (Do this for all but the last instrument in the chain where the shunt should remain at Pins 21 ↔ 22).

3. Check that the following cable connections are made in all instruments (again refer to Figure 3-19):

    - J3 on the Multidrop/LVDS PCA to the CPU’s COM1 connector
    - (Note that the CPU’s COM2 connector is not used in Multidrop)
    - J4 on the Multidrop/LVDS PCA to J12 on the motherboard
    - J1 on the Multidrop/LVDS PCS to the front panel LCD

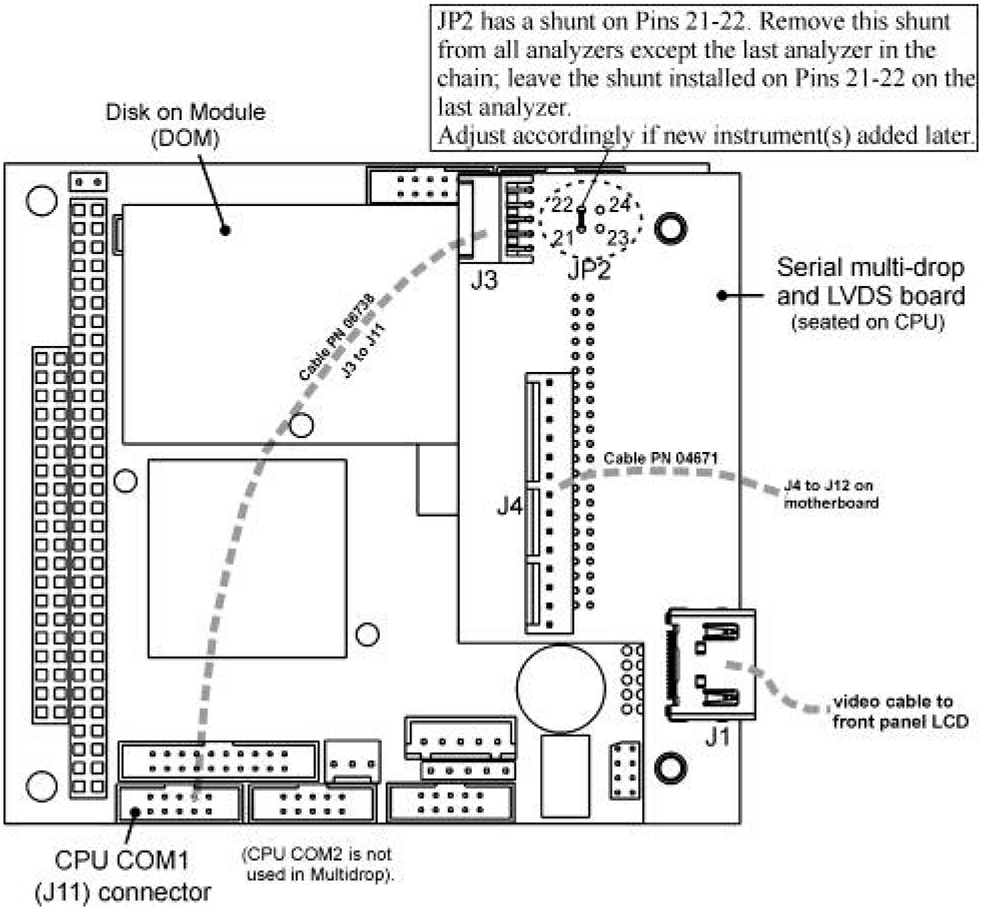

JP2 has a shunt on Pins 21-22. Remove this shunt from all analyzers except the last analyzer in the chain; leave the shunt installed on Pins 21-22 on the last analyzer.
Adjust accordingly if new instrument(s) added later.

Disk on Module (DOM)
22
24
21
23
J3
JP2
Serial multi-drop and LVDS board (seated on CPU)
Cable PN 06738 J3 to J11
Cable PN 04671
J4
J4 to J12 on motherboard
J1
video cable to front panel LCD
CPU COM1 (J11) connector
(CPU COM2 is not used in Multidrop).

Figure 3-19: Jumper and Cables for Multidrop Mode

(Note: If you are adding an instrument to the end of a previously configured chain, remove the shunt between Pins 21 ↔ 22 of JP2 on the Multidrop/LVDS PCA in the instrument that was previously the last instrument in the chain.)

4. Close the instrument.

5. Referring to Figure 3-20, use straight-through DB9 male > DB9 female cables to interconnect the host RS232 port to the first analyzer’s RS232 port; then, from the first analyzer’s COM2 port to the second analyzer’s RS232 port, and from the second analyzer’s COM2 port to the third analyzer’s RS232 port, etc., connecting in this fashion up to eight analyzers, subject to the distance limitations of the RS-232 standard.

6. On the rear panel of each analyzer, adjust the DCE DTE switch (see Figure 3-4 and Section 5.1) so that the green and the red LEDs (RX and TX) of the COM1 connector (labeled RS232) are both lit. (Ensure you are using the correct RS-232 cables internally wired specifically for RS-232 communication; see Table 1-1, “Communication Cables” and Section 3.3.1.7: Connecting the Communications Interfaces, “RS-232 Connection”).

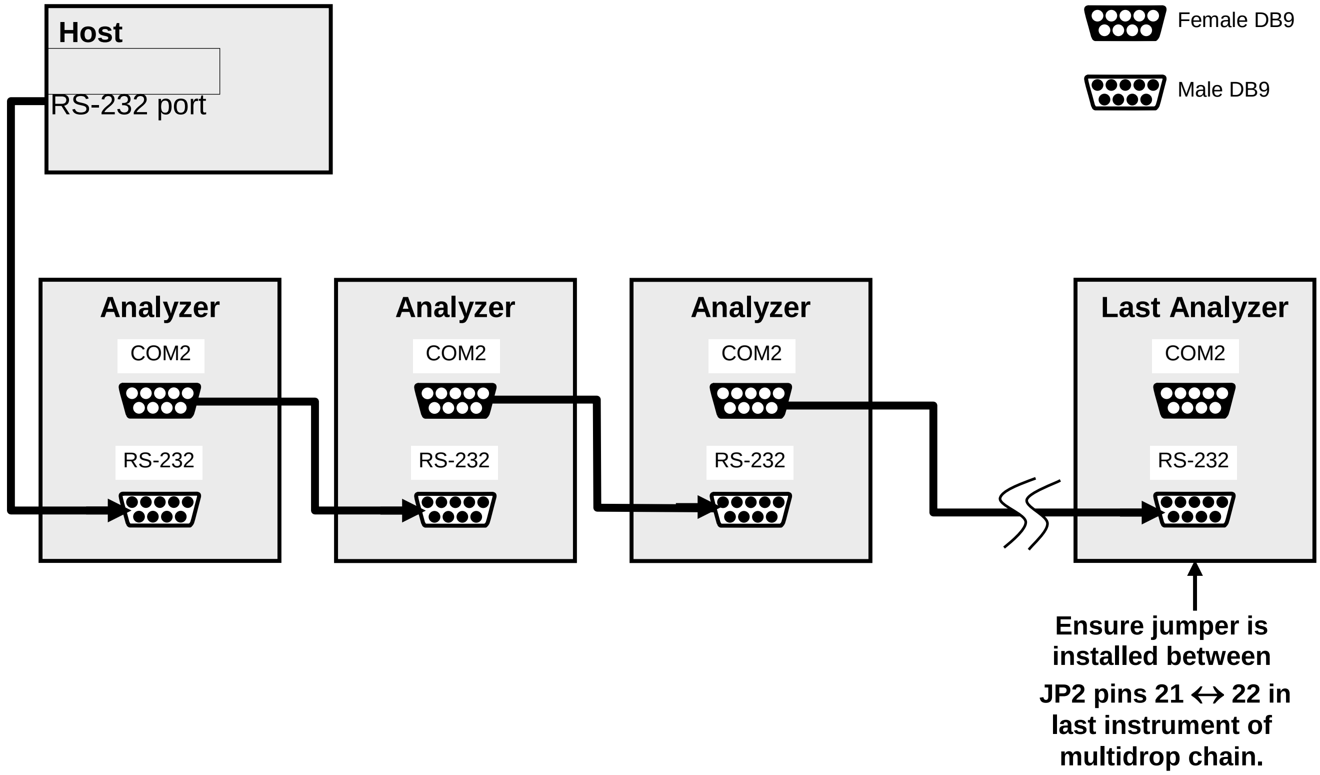
Host
RS-232 port
Female DB9
Male DB9
Analyzer
COM2
RS-232
Analyzer
COM2
RS-232
Analyzer
COM2
RS-232
Last Analyzer
COM2
RS-232
Ensure jumper is installed between JP2 pins 21 ↔ 22 in last instrument of multidrop chain.

Figure 3-20: RS-232-Multidrop PCA Host/Analyzer Interconnect Diagram

7. BEFORE communicating from the host, power on the instruments and check that the Machine ID code is unique for each (Section 4.7.1).
   a. In the SETUP Mode menu go to SETUP>MORE>COMM>ID. The default ID is typically the model number or “0”.
   b. to change the identification number, press the button below the digit to be changed.
   c. Press/select ENTER to accept the new ID for that instrument.
8. Next, in the SETUP>MORE>COMM>COM1 menu (do not use the COM2 menu for multidrop), edit the COM1 MODE parameter as follows: press/select EDIT and set only QUIET MODE, COMPUTER MODE, and MULTIDROP MODE to ON. Do not change any other settings.
9. Press/select ENTER to accept the changed settings, and ensure that COM1 MODE now shows 35.

10. Press/select SET> to go to the COM1 BAUD RATE menu and ensure it reads the same for all instruments (edit as needed so that all instruments are set at the same baud rate).

Note **The (communication) Host instrument can address only one instrument at a time, each by its unique ID (see step 12 above).**

Note **Teledyne API recommends setting up the first link, between the Host and the first analyzer, and testing it before setting up the rest of the chain.**

RS-485 CONNECTION

As delivered from the factory, **COM2** is configured for RS-232 communications. This port can be reconfigured for operation as a non-isolated, half-duplex RS-485 port. Using COM2 for RS-485 communication disables the USB port. To reconfigure this port for RS-485 communication, please contact the factory.

3.3.2. PNEUMATIC CONNECTIONS

Note that each time the pneumatic configuration is changed for any purpose, a backpressure compensation calibration must be performed (Section 7.3.7).

3.3.2.1. About Diluent Gas (Zero Air)

Zero Air is similar in chemical composition to the Earth’s atmosphere but scrubbed of all components that might affect the calibrator’s readings.

- Diluent Air should be dry (approximately -20ºC of Dew Point).
- Diluent Air should be supplied at a gas pressure of between 25 PSI and 35 PSI with a flow greater than the flow rate for the calibrator. For the standard unit this means greater than 10 SLPM.
- For calibrators with the 20 LPM diluent flow option (OPT) the diluent air should be supplied at a gas pressure of between 30 PSI and 35 PSI.
- T700 calibrators with optional O_3 generators installed require that the zero air source supply gas flowing at a continuous rate of at least 100 cm^3/min.
- If the calibrator is also equipped with an internal photometer, the zero air source supply gas must be capable of a continuous rate of flow of at least 1.1 LPM.

Zero Air can be purchased in pressurized canisters or created using a Teledyne API’s Model 701 Zero Air Generator.

3.3.2.2. **About Calibration Gas**

Calibration gas is a gas specifically mixed to match the chemical composition of the type of gas being measured at near full scale of the desired measurement range. Usually it is a single gas type mixed with N_2 although bottles containing multiple mixtures of compatible gases are also available (e.g. H_2S, O_2 and CO mixed with N_2).

- Calibration gas should be supplied at a pressure of between 25 PSI and 35 PSI with a flow greater than the flow rate for the calibrator.

NIST TRACEABLE CALIBRATION GAS STANDARDS

All calibration gases should be verified against standards of the National Institute for Standards and Technology (NIST). To ensure NIST traceability, we recommend acquiring cylinders of working gas that are certified to be traceable to NIST Standard Reference Materials (SRM). These are available from a variety of commercial sources.

The following tables lists some of the most common NIST Primary gas standards

Table 3-7: NIST Standards for CO_2

SRM	Description	Nominal Amount of Substance
1676	Carbon Dioxide in Air	365 ppm
1674b	Carbon Dioxide in Nitrogen	7 %
1675b	Carbon Dioxide in Nitrogen	14 %
2619a	Carbon Dioxide in Nitrogen	0.5 %
2620a	Carbon Dioxide in Nitrogen	1.0 %
2621a	Carbon Dioxide in Nitrogen	1.5 %
2622a	Carbon Dioxide in Nitrogen	2.0 %
2623a	Carbon Dioxide in Nitrogen	2.5 %
2624a	Carbon Dioxide in Nitrogen	3.0 %
2625a	Carbon Dioxide in Nitrogen	3.5 %
2626a	Carbon Dioxide in Nitrogen	4.0 %
2745	Carbon Dioxide in Nitrogen	16 %

Table 3-8: NIST Standards for CO

SRM	Description	Nominal Amount of Substance
2612a	Carbon Monoxide in Air	10 ppm
2613a	Carbon Monoxide in Air	20 ppm
2614a	Carbon Monoxide in Air	42 ppm
1677c	Carbon Monoxide in Nitrogen	10 ppm
1678c	Carbon Monoxide in Nitrogen	50 ppm
1679c	Carbon Monoxide in Nitrogen	100 ppm
1680b	Carbon Monoxide in Nitrogen	500 ppm
1681b	Carbon Monoxide in Nitrogen	1000 ppm
2635a	Carbon Monoxide in Nitrogen	25 ppm
2636a	Carbon Monoxide in Nitrogen	250 ppm
2637a	Carbon Monoxide in Nitrogen	2500 ppm
2638a	Carbon Monoxide in Nitrogen	5000 ppm
2639a	Carbon Monoxide in Nitrogen	1 %
2640a	Carbon Monoxide in Nitrogen	2 %
2641a	Carbon Monoxide in Nitrogen	4 %
2642a	Carbon Monoxide in Nitrogen	8 %
2740a	Carbon Monoxide in Nitrogen	10 %
2741a	Carbon Monoxide in Nitrogen	13 %

Table 3-9: NIST Standards for H_2S

SRM	Description	Nominal Amount of Substance
2730	Hydrogen Sulfide in Nitrogen	5 ppm
2731	Hydrogen Sulfide in Nitrogen	20 ppm

Table 3-10: NIST Standards for CH_4

SRM	Description	Nominal Amount of Substance
1658a	Methane in Air	1 ppm
1659a	Methane in Air	10 ppm
2750	Methane in Air	50 ppm
2751	Methane in Air	100 ppm
1660a	Methane-Propane in Air	4 : 1

Table 3-11: NIST Standards for O_2

SRM	Description	Nominal Amount of Substance
2657a	Oxygen in Nitrogen	2 %
2658a	Oxygen in Nitrogen	10 %
2659a	Oxygen in Nitrogen	21 %

Table 3-12: NIST Standards for SO_2

SRM	Description	Nominal Amount of substance
1661a	Sulfur Dioxide in Nitrogen	500
1662a	Sulfur Dioxide in Nitrogen	1000 ppm
1663a	Sulfur Dioxide in Nitrogen	1500 ppm
1664a	Sulfur Dioxide in Nitrogen	2500 ppm
1693a	Sulfur Dioxide in Nitrogen	50 ppm
1694a	Sulfur Dioxide in Nitrogen	100 ppm
1696a	Sulfur Dioxide in Nitrogen	3500 ppm

Table 3-13: NIST Standards for NO

SRM	Description	Nominal Amount of Substance
1683b	Nitric Oxide in Nitrogen	50 ppm
1684b	Nitric Oxide in Nitrogen	100 ppm
1685b	Nitric Oxide in Nitrogen	250 ppm
1686b	Nitric Oxide in Nitrogen	500 ppm
1687b	Nitric Oxide in Nitrogen	1000 ppm
2627a	Nitric Oxide in Nitrogen	5 ppm
2628a	Nitric Oxide in Nitrogen	10 ppm
2629a	Nitric Oxide in Nitrogen	20 ppm
2630	Nitric Oxide in Nitrogen	1500 ppm
2631a	Nitric Oxide in Nitrogen	3000 ppm
2735	Nitric Oxide in Nitrogen	800 ppm
2736a	Nitric Oxide in Nitrogen	2000 ppm
2737	Nitric Oxide in Nitrogen	500 ppm
2738	Nitric Oxide in Nitrogen	1000 ppm

Table 3-14: NIST Standards for Propane (C_3H_8)

SRM	Description	Nominal Amount of Substance
1665b	Propane in Air	3 ppm
1666b	Propane in Air	10 ppm
1667b	Propane in Air	50 ppm
1668b	Propane in Air	100 ppm
1669b	Propane in Air	500 ppm
2764	Propane in Air	0.25 ppm
2644a	Propane in Nitrogen	250 ppm
2646a	Propane in Nitrogen	1000 ppm
2647a	Propane in Nitrogen	2500 ppm
2648a	Propane in Nitrogen	5000 ppm

MINIMUM CALIBRATION GAS SOURCE CONCENTRATION

Determining minimum Cal Gas Concentration to determine the minimum concentration of a calibration gas required by your system:

Determine the Total Flow required by your system by adding the gas flow requirement of each of the analyzers in the system.

Multiply this by 1.5.

Decide on a Calibration Gas flow rate.

Determine the Calibration Gas ratio by divide the Total Flow by the Calibration Gas Flow Rate.

Multiply the desired target calibration gas concentration by the result from step 4.
EXAMPLE: Your system has two analyzers each requiring 2SLPM of cal gas flow.

2SLPM + 2SLPM = 4SLPM

4SLPM x 1.5 = 6SLPM = Total Gas Flow Rate

If the T700 calibrator so that the cal gas flow rate is 2SLPM (therefore the Diluent Flow Rate would need to be set at 4 SLPM) the Calibration Gas ratio would be:

6SLPMm ÷ 2SLPM = 3:1

Therefore if your Target Calibration Gas Concentration is intended to be 200 ppm, the minimum required source gas concentration for this system operating at these flow rates would be:

3 x 200ppm = 600 ppm

3.3.2.3. Connecting Diluent Gas to the Calibrator

1. Attach the zero air source line to the port labeled Diluent In.
2. Use the fittings provided with the calibrator to connect the zero air source line.
   - First, finger tighten.
   - Then using the properly sized wrench, make an additional 1 and ¼ turn.

3.3.2.4. Connecting Calibration Source Gas to the T700 Calibrator

Connect the source gas line(s) to the ports labeled CYL1 through CYL4 on the back of the calibrator (see Figure 3-4).

- Source gas delivery pressure should be regulated between 25 PSI to 30 PSI.
- Use stainless steel tubing with a 1/8 inch outer diameter.

3.3.2.5. **Connecting Gas Outputs from the Calibrator**

SET UP FOR DIRECT CONNECTIONS TO OTHER INSTRUMENTS

Use this setup if you are connecting the T700 calibrator directly to other instruments without the use of any shared manifolds.

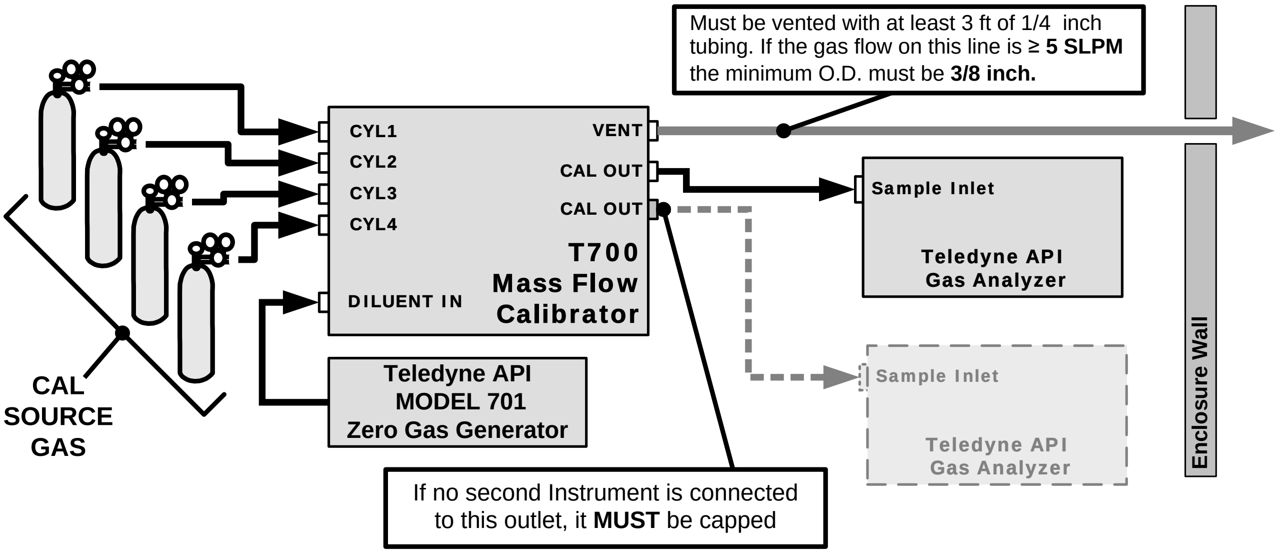
Must be vented with at least 3 ft of 1/4 inch tubing. If the gas flow on this line is ≥ **5 SLPM** the minimum O.D. must be **3/8 inch.**
CYL1
CYL2
CYL3
CYL4
DILUENT IN
VENT
CAL OUT
CAL OUT
T700
Mass Flow
Calibrator
Sample Inlet
Teledyne API
Gas Analyzer
Sample Inlet
Teledyne API
Gas Analyzer
Enclosure Wall
CAL
SOURCE
GAS
Teledyne API
MODEL 701
Zero Gas Generator
If no second Instrument is connected to this outlet, it **MUST** be capped

Figure 3-21: Set up for T700 – Connecting the Basic T700 to a Sample Manifold

To determine if the gas flow on the vent line is ≥ 5 SLPM subtract the gas flow for each instrument connected to the outlets of the T700 from the TOTAL FLOW setting for the calibrator (see Section 3.4.9).

If the T700 has the optional O_3 photometer installed remember that this option requires 800 cc3/min (0.8 LPM) of additional flow (see Section 3.4.9 or Figure 3-27).

EXAMPLE: Your system has two analyzers each requiring 2SLPM of cal gas flow and the T700 includes the O_3 photometer. If the TOTAL FLOW rate for the calibrator is set at 10 SLPM:

10LPM - 2LPM - 2LPM - 0.8 LPM = 5.2LPM

Therefore, the vent would require a gas line with an O.D. 3/8 inch.

CONNECTING THE CALIBRATOR TO A SAMPLE GAS MANIFOLD

Use this setup when connecting the T700 calibrator to an analyzer network using a sample manifold. In this case, the sampling cane and the manifold itself act as the vent for the T700.

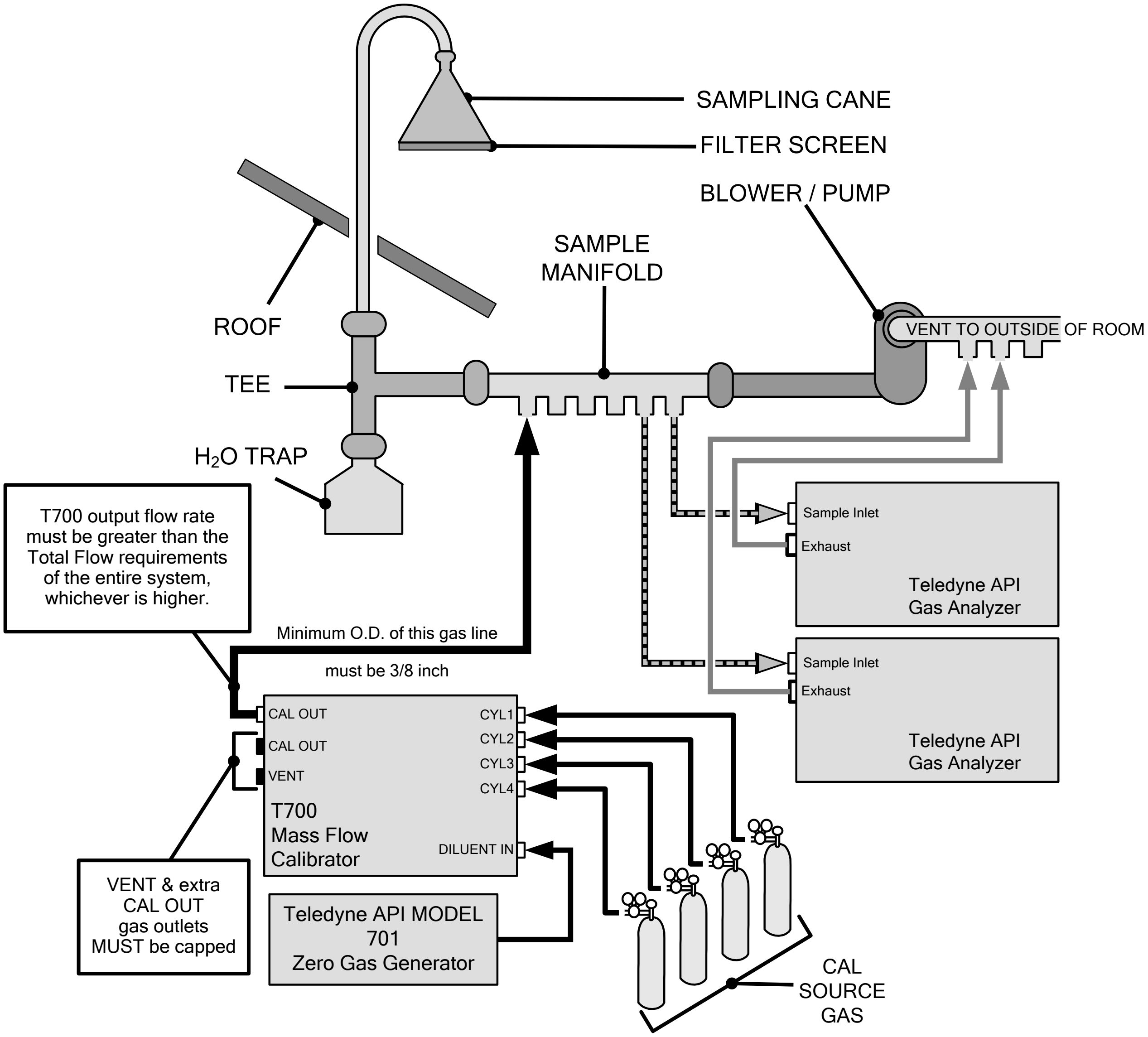
SAMPLING CANE
FILTER SCREEN
BLOWER / PUMP
SAMPLE MANIFOLD
ROOF
TEE
H_2O TRAP
VENT TO OUTSIDE OF ROOM
T700 output flow rate must be greater than the Total Flow requirements of the entire system, whichever is higher.
Minimum O.D. of this gas line must be 3/8 inch
Sample Inlet
Exhaust
Teledyne API Gas Analyzer
Sample Inlet
Exhaust
Teledyne API Gas Analyzer
CAL OUT
CAL OUT
VENT
CYL1
CYL2
CYL3
CYL4
DILUENT IN
T700 Mass Flow Calibrator
VENT & extra CAL OUT gas outlets MUST be capped
Teledyne API MODEL 701 Zero Gas Generator
CAL SOURCE GAS

Figure 3-22: Set up for T700 – Connecting the T700 to a Sample Manifold

Note

- **This is the recommended method for connecting the T700 calibrator to a system with analyzers that DO NOT have internal zero/span valves.**
- **The manifolds as shown in the above drawing are oriented to simplify the drawing. Their actual orientation in your set-up is with the ports facing upward. All unused ports must be capped.**
- **When initiating calibration, wait a minimum of 15 minutes for the calibrator to flood the entire sampling system with calibration gas.**

CONNECTING THE CALIBRATOR TO A CALIBRATION MANIFOLD

Using a calibration manifold provides a pneumatic interface between the calibration system and other devices (or systems) which use the calibrator's gas output. Calibration manifolds usually have one or more ports for connections to other external devices (such as an analyzer).

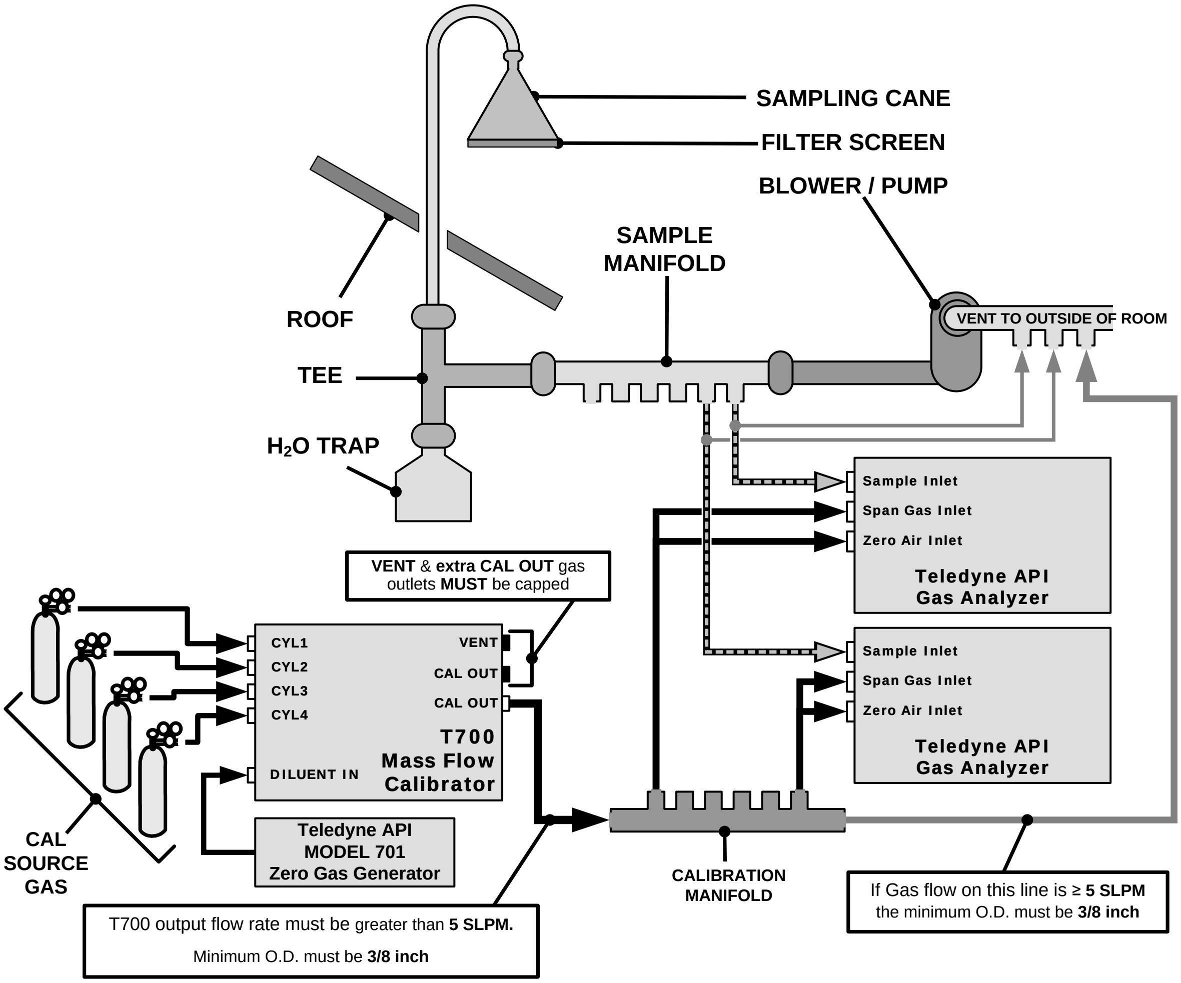
SAMPLING CANE
FILTER SCREEN
BLOWER / PUMP
SAMPLE MANIFOLD
ROOF
TEE
H_2O TRAP
VENT TO OUTSIDE OF ROOM
Sample Inlet
Span Gas Inlet
Zero Air Inlet
Teledyne API Gas Analyzer
Sample Inlet
Span Gas Inlet
Zero Air Inlet
Teledyne API Gas Analyzer
VENT & extra CAL OUT gas outlets MUST be capped
CYL1
CYL2
CYL3
CYL4
DILUENT IN
VENT
CAL OUT
CAL OUT
T700 Mass Flow Calibrator
Teledyne API MODEL 701 Zero Gas Generator
CAL SOURCE GAS
CALIBRATION MANIFOLD
If Gas flow on this line is ≥ 5 SLPM the minimum O.D. must be 3/8 inch
T700 output flow rate must be greater than 5 SLPM. Minimum O.D. must be 3/8 inch

Figure 3-23: Set up for T700 – Connecting the T700 to a Calibration Manifold

Note

- **This method requires the analyzers connected to the calibration system have internal zero/span valves.**
- **The manifold should be kept as clean as possible to avoid loss of sample gas flow from blockages or constrictions.**
- **The manifolds as shown in the above drawing are oriented to simplify the drawing. Their actual orientation in your set-up is with the ports facing upward. All unused ports must be capped.**
- **When initiating calibration, wait a minimum of 15 minutes for the calibrator to flood the entire calibration manifold with calibration gas..**

CALIBRATION MANIFOLD EXHAUST/VENT LINE

The manifold's excess gas should be vented outside of the room. This vent should be of large enough internal diameter to avoid any appreciable pressure drop, and it must be located sufficiently downstream of the output ports to assure that no ambient air enters the manifold due to eddy currents or back diffusion.

CONNECTING THE CALIBRATOR TO A DUAL SPAN GAS / ZERO AIR CALIBRATION MANIFOLD

Another type of calibration setup utilizes separate span gas and the zero air manifolds (see Figure 3-24).

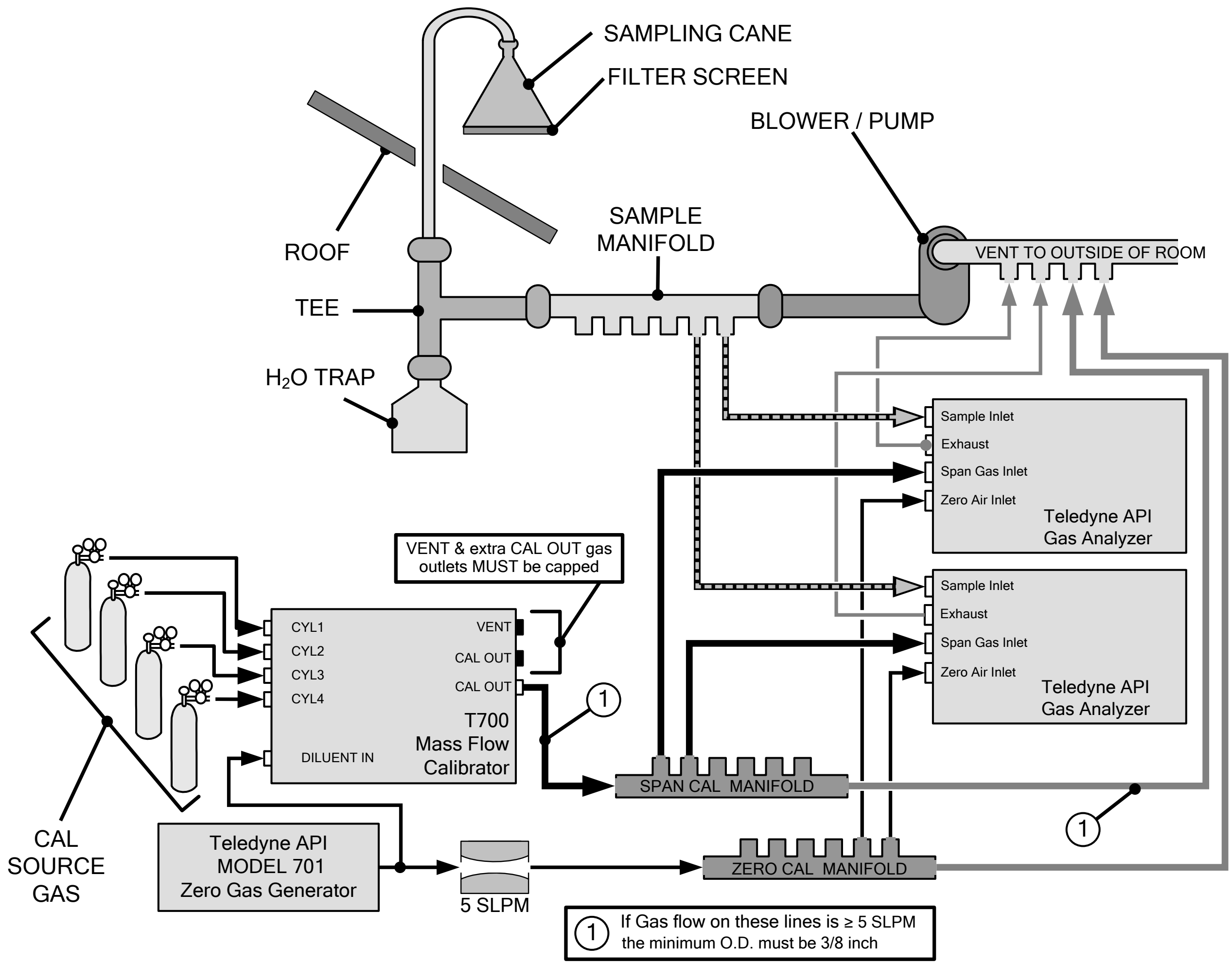
SAMPLING CANE
FILTER SCREEN
BLOWER / PUMP
ROOF
SAMPLE MANIFOLD
VENT TO OUTSIDE OF ROOM
TEE
H_2O TRAP
Sample Inlet
Exhaust
Span Gas Inlet
Zero Air Inlet
Teledyne API Gas Analyzer
VENT & extra CAL OUT gas outlets MUST be capped
Sample Inlet
Exhaust
Span Gas Inlet
Zero Air Inlet
Teledyne API Gas Analyzer
CYL1
CYL2
CYL3
CYL4
VENT
CAL OUT
CAL OUT
①
T700 Mass Flow Calibrator
DILUENT IN
SPAN CAL MANIFOLD
①
CAL SOURCE GAS
Teledyne API MODEL 701 Zero Gas Generator
5 SLPM
ZERO CAL MANIFOLD
① If Gas flow on these lines is ≥ 5 SLPM the minimum O.D. must be 3/8 inch

Figure 3-24: Set up for T700 – Connecting the T700 to a Dual Span Gas / Zero Air Manifold

Note **This set up is subject to the same notes and conditions as the single calibration manifold described previously with the following two exceptions:**

• The T700 total gas flow rate (Cal Gas Flow Rate + Diluent Flow Rate) out should be greater than the Total Flow requirements of the entire system.

• The manifolds as shown in the above drawing are oriented to simplify the drawing. Their actual orientation in your set-up is with the ports facing upward. All unused ports must be capped.

SPAN GAS/ZERO AIR CALIBRATION MANIFOLD EXHAUST/VENT LINES

The span and zero air manifolds' excess gas should be vented to a suitable vent outside of the room. This vent should be of large enough internal diameter to avoid any appreciable pressure drop, and it must be located sufficiently downstream of the output ports to assure that no ambient air enters the manifold due to eddy currents or back diffusion.

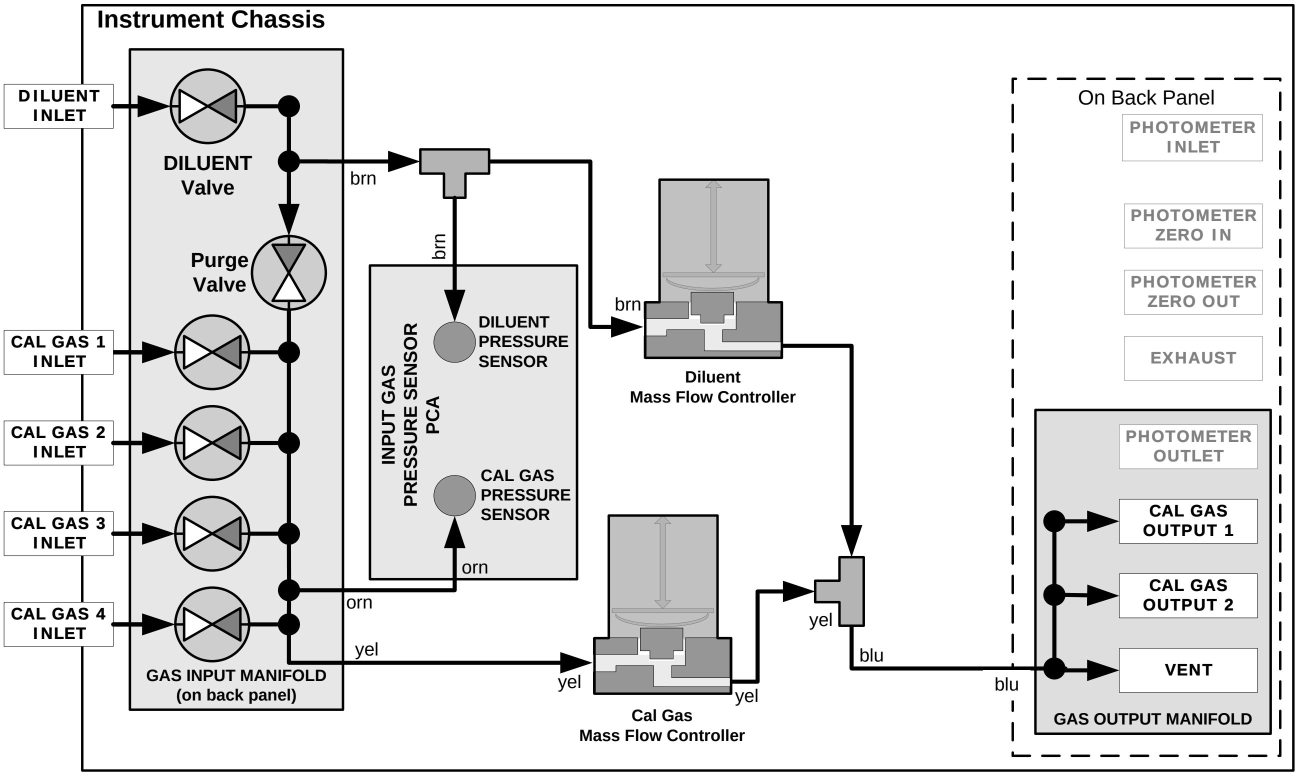
Instrument Chassis
DILUENT INLET
DILUENT Valve
Purge Valve
CAL GAS 1 INLET
CAL GAS 2 INLET
CAL GAS 3 INLET
CAL GAS 4 INLET
GAS INPUT MANIFOLD (on back panel)
brn
brn
INPUT GAS PRESSURE SENSOR PCA
DILUENT PRESSURE SENSOR
CAL GAS PRESSURE SENSOR
orn
orn
yel
yel
brn
Diluent Mass Flow Controller
Cal Gas Mass Flow Controller
yel
yel
blu
blu
On Back Panel
PHOTOMETER INLET
PHOTOMETER ZERO IN
PHOTOMETER ZERO OUT
EXHAUST
PHOTOMETER OUTLET
CAL GAS OUTPUT 1
CAL GAS OUTPUT 2
VENT
GAS OUTPUT MANIFOLD

Figure 3-25: T700 Pneumatic Diagram – Base Unit

The standard T700 Dynamic Dilution Calibrator is equipped with one calibration gas mass flow controller (flow rate 0 – 100 cm^3/min) and one diluent gas mass flow controller (flow rate 0-10 LPM). See Table 1-1 for the various flow rate options.

3.3.2.6. Other Pneumatic Connections

Some of the T700 Dynamic Dilution Calibrator's optional equipment requires additional pneumatic connections.

O_3 GENERATOR OPTION

Because ozone (O_3) quickly breaks down into molecular oxygen (O_2), this calibration gas cannot be supplied in precisely calibrated bottles like other gases such as SO_2, CO, CO_2 NO, H_2S, etc. The optional O_3 generator extends the capabilities of the T700 Dynamic Dilution Calibrator dynamically generate calibration gas mixtures containing O_3.

Additionally a glass mixture volume, designed to meet US EPA guidelines for Gas Phase Titration (GPT), is included with this option. This chamber, in combination with the O_3 generator, allow the T700 to use the GPT technique to more precisely create NO_2 calibration mixtures

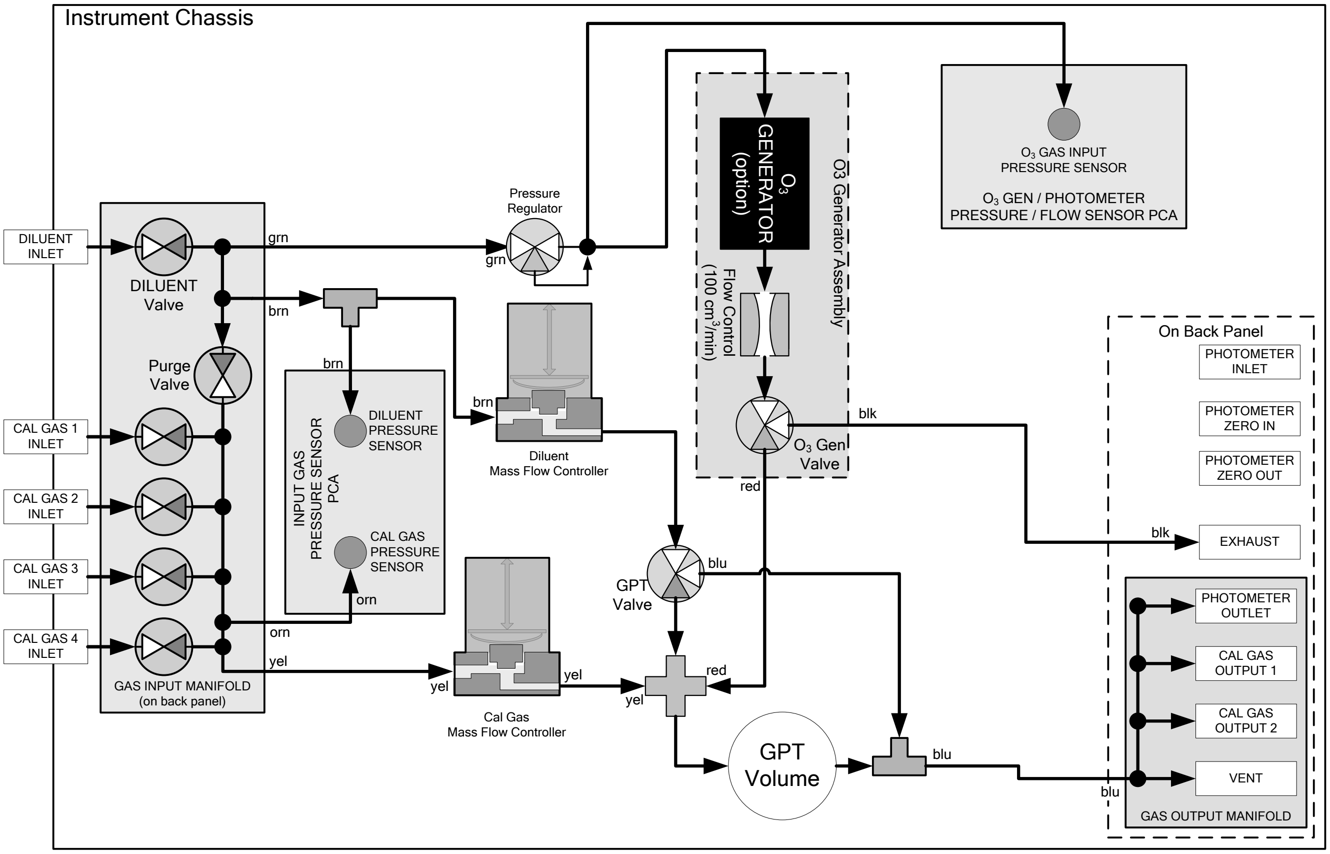
Instrument Chassis
DILUENT INLET
DILUENT Valve
Purge Valve
CAL GAS 1 INLET
CAL GAS 2 INLET
CAL GAS 3 INLET
CAL GAS 4 INLET
GAS INPUT MANIFOLD (on back panel)
grn
brn
brn
orn
yel
INPUT GAS PRESSURE SENSOR PCA
DILUENT PRESSURE SENSOR
CAL GAS PRESSURE SENSOR
orn
Pressure Regulator
grn
brn
Diluent Mass Flow Controller
Cal Gas Mass Flow Controller
yel
yel
yel
O3 GENERATOR (option)
O3 Generator Assembly
Flow Control (100 cm3/min)
O3 Gen Valve
red
blk
GPT Valve
blu
red
GPT Volume
blu
O3 GAS INPUT PRESSURE SENSOR
O3 GEN / PHOTOMETER PRESSURE / FLOW SENSOR PCA
On Back Panel
PHOTOMETER INLET
PHOTOMETER ZERO IN
PHOTOMETER ZERO OUT
blk
EXHAUST
PHOTOMETER OUTLET
CAL GAS OUTPUT 1
CAL GAS OUTPUT 2
VENT
blu
GAS OUTPUT MANIFOLD

Figure 3-26: Internal Pneumatics for T700 Calibrator with Optional O_3 Generator and GPT Chamber

Table 3-15: Operating Mode Valve States for T700 Calibrator with Optional O_3 Generator.

MODE	VALVES (X = Closed; O = Open)								MFCs		
	CYL 1	CYL 2	CYL 3	CYL 4	PURGE	DILUENT	GPT	O_3 GEN	CAL1	CAL2[1]	DILUENT
Generate Source Gas	O[2]	O[2]	O[2]	O[2]	X	O	X	X	ON[3]	ON[3]	ON
Generate O_3	X	X	X	X	X	O	X	O	OFF	OFF	OFF
Leak Check 0-17%	X	X	X	X	O	O	X	X	ON	ON	ON
Leak Check 17%-100%	X	X	X	X	O	X	X	X	ON	ON	ON
GPT	O[2]	O[2]	O[2]	O[2]	X	O	O	O	ON[3]	ON[3]	ON
GPTPS	X	X	X	X	X	O	O	O	OFF	OFF	ON
PURGE	X	X	X	X	O	O	O	O	ON[3]	ON[3]	ON
STANDBY	X	X	X	X	X	O	X	X	OFF	OFF	OFF

[1] Only present if multiple cal gas MFC option is installed.

[2] The valve associated with the cylinder containing the chosen source gas is open.

[3] In instrument with multiple MFCs the CPU chooses which MFC to use depending on the target gas flow requested.

The output of the O_3 generator can be controlled in one of two ways:

- CONSTANT mode: By selecting a specific, constant drive voltage (corresponding to a specific O_3 concentration) for the generator, or;
- BENCH mode: In this mode the O_3 concentration control loop uses the photometer's O_3 measurement as input, and the bench feedback control will take over and adjust the O_3 generator drive voltage to match the requested concentration.

See Section 10.6 for more details on the operation of the O_3 generator.

In addition to the diluent gas, calibration source gas, and gas output connections discussed in the preceding sections, this option also requires an O_3 exhaust line be connected to the EXHAUST outlet on the back of the T700 (see Figure 3-4).

Note **The EXHAUST line must be vented to atmospheric pressure using maximum of 10 meters of ¼" PTFE tubing.**

Venting must be outside the shelter or immediate area surrounding the instrument.

O_3 GENERATOR WITH PHOTOMETER OPTION

The photometer option increases the accuracy of the T700 calibrator's optional O_3 generator (OPT 1A) by directly measuring O_3 content of the gas output by the generator.

The photometer's operation is based on the principle that ozone molecules absorb UV light of a certain wavelength. A mercury lamp internal to the photometer emits UV light at that wavelength. This light shines down a hollow glass tube that is alternately filled with sample gas (the measure phase), and zero gas (the reference phase). A detector, located at the other end of the glass tube measure the brightness of the UV light after it passes though the gas in the tube. The O_3 content of the gas is calculated based on the ratio of the UV light intensity during the measure phase (O_3 present) and the reference phase (no O_3 present).

When the photometer option is installed, a third more precise and stabile option, called the BENCH feedback mode, exists for controlling the output of the O_3 generator. In BENCH mode the intensity of the O_3 generator's UV lamp is controlled (and therefore the concentration of the O_3 created) by the T700's CPU based on the actual O_3 concentration measurements made by the photometer.

See Section 10.7 for more details on the operation of the O_3 photometer.

This option requires that the O_3 generator (OPT 1A) be installed.

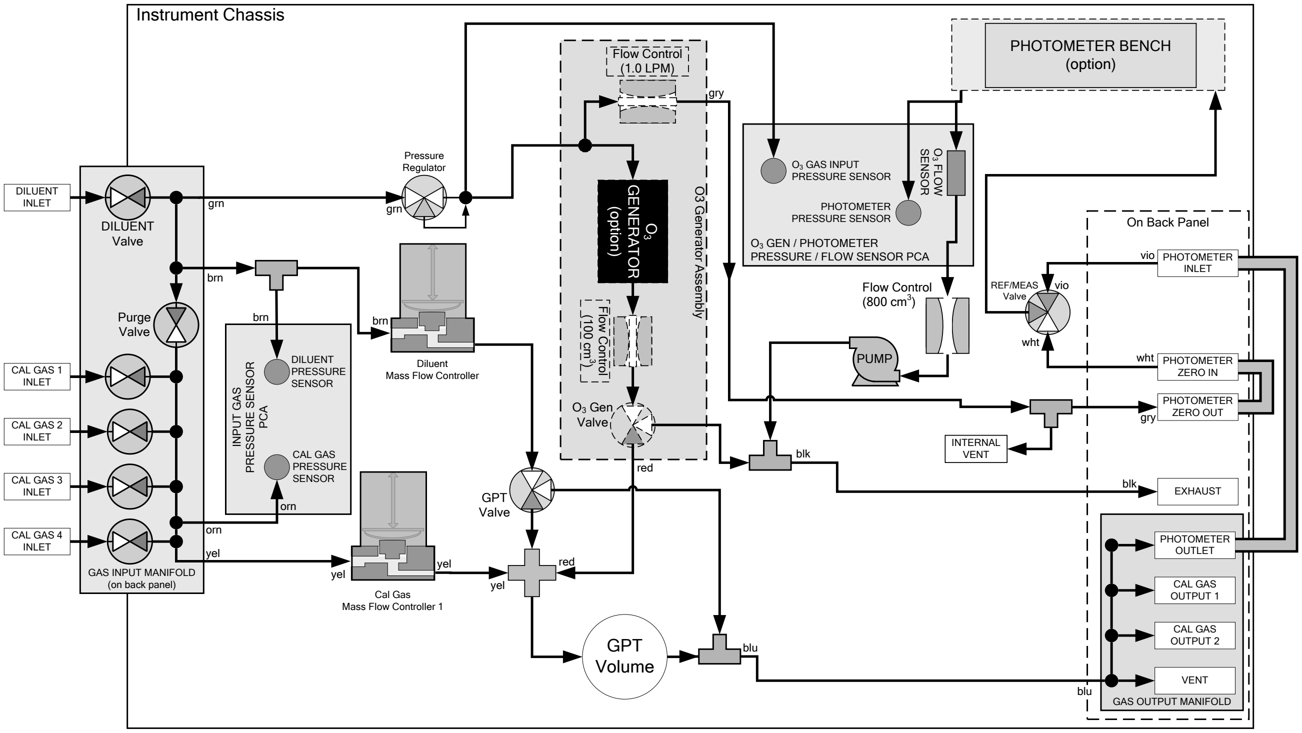
Instrument Chassis
DILUENT INLET
DILUENT Valve
Purge Valve
CAL GAS 1 INLET
CAL GAS 2 INLET
CAL GAS 3 INLET
CAL GAS 4 INLET
GAS INPUT MANIFOLD (on back panel)
grn
brn
orn
yel
INPUT GAS PRESSURE SENSOR PCA
DILUENT PRESSURE SENSOR
CAL GAS PRESSURE SENSOR
Pressure Regulator
Diluent Mass Flow Controller
Cal Gas Mass Flow Controller 1
Flow Control (1.0 LPM)
gry
O3 GENERATOR (option)
O3 Generator Assembly
Flow Control (100 cm3)
O3 Gen Valve
red
GPT Valve
GPT Volume
blu
blk
PHOTOMETER BENCH (option)
O3 GAS INPUT PRESSURE SENSOR
PHOTOMETER PRESSURE SENSOR
O3 FLOW SENSOR
O3 GEN / PHOTOMETER PRESSURE / FLOW SENSOR PCA
Flow Control (800 cm3)
PUMP
INTERNAL VENT
REF/MEAS Valve
vio
wht
On Back Panel
PHOTOMETER INLET
PHOTOMETER ZERO IN
PHOTOMETER ZERO OUT
EXHAUST
PHOTOMETER OUTLET
CAL GAS OUTPUT 1
CAL GAS OUTPUT 2
VENT
GAS OUTPUT MANIFOLD

Figure 3-27: Internal Pneumatics for T700 Calibrator with Optional O_3 Generator and Photometer

Table 3-16: Operating Mode Valve States for T700 Calibrator with Optional O_3 Generator and Photometer

GAS TYPE	VALVES (X = Closed; O = Open)									MFCs			PHOT PUMP
	CYL 1	CYL 2	CYL 3	CYL 4	PURGE	DILUENT	GPT	O_3 GEN	PHOT M/R	CAL1	CAL2[1]	DILUENT	
Generate Source Gas	O[2]	O[2]	O[2]	O[2]	X	O	X	X	Reference Phase	ON[3]	ON[3]	ON	OFF
Generate O_3	X	X	X	X	X	O	X	O	Switching	OFF	OFF	OFF	ON[4]
Leak Check 0-17%	X	X	X	X	O	O	X	X		ON	ON	ON	
Leak Check 17%-100%	X	X	X	X	O	X	X	X		ON	ON	ON	
GPT	O[2]	O[2]	O[2]	O[2]	X	O	O	O	Reference Phase	ON[3]	ON[3]	ON	OFF
GPTPS	X	X	X	X	X	O	O	O	Switching	OFF	OFF	ON	ON[4]
PURGE	X	X	X	X	O	O	O	O	Reference Phase	ON[3]	ON[3]	ON	OFF
STANDBY	X	X	X	X	X	O	X	X	Reference Phase	OFF	OFF	OFF	OFF

[1] Only present if multiple cal gas MFC option is installed.

[2] The valve associated with the cylinder containing the chosen source gas is open.

[3] In an instrument with multiple MFCs the CPU chooses which MFC to use depending on the target gas flow requested.

[4] When generating O_3 or in GPT Pre-Set mode, the photometer pump is the primary creator of gas flow through the T700. Flow rates are controlled by critical flow orifice(s) located in the gas stream

In addition to the connections discussed in the previous sections, this option also requires the following:

- Loop back lines must be connected between:
  - PHOTOMETER OUTLET fixture and the PHOTOMETER INLET fixture.
  - PHOTOMETER ZERO OUT fixture and the PHOTOMETER ZERO IN fixture.
- An O_3 exhaust line must be connected to the **EXHAUST** outlet.

See Figure 3-4 for the location of these fixtures.

Note **The EXHAUST line must be vented to atmospheric pressure using maximum of 10 meters of ¼" PTEF tubing. This venting must be outside the shelter or immediate area surrounding the instrument.**

MULTIPLE CALIBRATION SOURCE GAS MFC'S

An optional third mass flow controller can be added on the calibration gas stream. When this option is installed, the T700 has both calibration gas MFCs on the same gas stream, installed in parallel (see Figure 3-28 and Figure 3-29). The calibrator turns on the MFC with the lowest flow rate that can accommodate the requested flow and can therefore supply the most accurate flow control. When a flow rate is requested that is higher than the highest rated MFC (but lower than their combined maximum flow rating), both controllers are activated.

EXAMPLE:

- Calibrator with one calibration gas MFC configured for 0-5 LPM:

  Maximum gas flow = 5 LPM
  Minimum gas flow = 500 cm^3/min

- Calibrator with two calibration gas MFCs configured for 0-1 LPM and 0-5 LPM:

  Calibration gas flow rates:
    5.001 to 6.000 LPM; both MFCs active
    1.001 LPM – 5.000 LPM; High MFC active;
    0.100 LPM – 1.000 LPM; Low MFC active

When this option is installed the test measurements that show the MFC actual and target flows (e.g., **ACT CAL**; **TARG CAL**) show the sum of the flows of all the active MFCs. On the other hand, the pressure test measurements show the pressure for only one MFC, not the sum as it is assumed that gas pressure is the same for all MFCs.

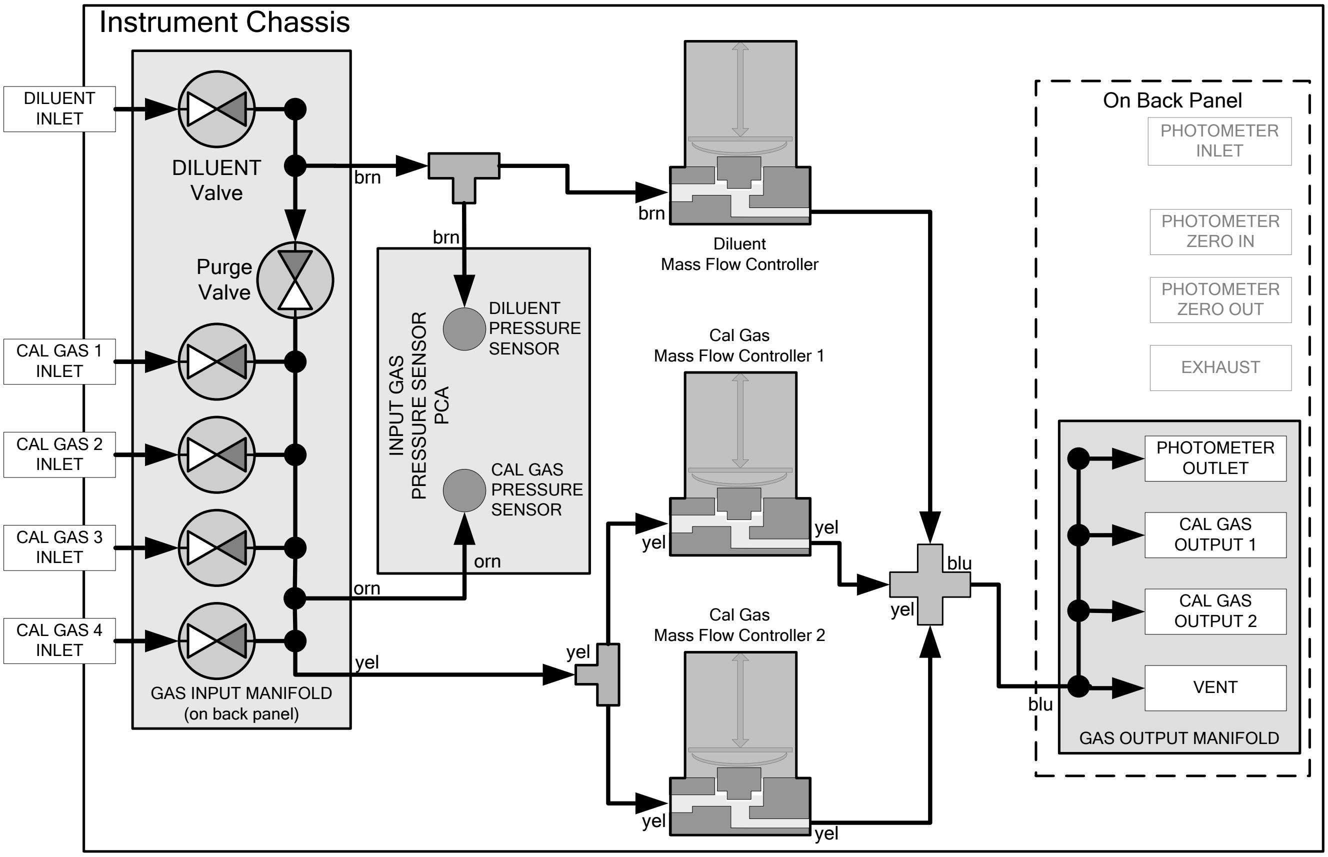
Instrument Chassis
DILUENT INLET
DILUENT Valve
Purge Valve
CAL GAS 1 INLET
CAL GAS 2 INLET
CAL GAS 3 INLET
CAL GAS 4 INLET
GAS INPUT MANIFOLD (on back panel)
brn
brn
brn
orn
orn
yel
yel
yel
yel
yel
yel
yel
INPUT GAS PRESSURE SENSOR PCA
DILUENT PRESSURE SENSOR
CAL GAS PRESSURE SENSOR
Diluent Mass Flow Controller
Cal Gas Mass Flow Controller 1
Cal Gas Mass Flow Controller 2
blu
blu
On Back Panel
PHOTOMETER INLET
PHOTOMETER ZERO IN
PHOTOMETER ZERO OUT
EXHAUST
PHOTOMETER OUTLET
CAL GAS OUTPUT 1
CAL GAS OUTPUT 2
VENT
GAS OUTPUT MANIFOLD

Figure 3-28: Basic T700 with Multiple Calibration Gas MFCs

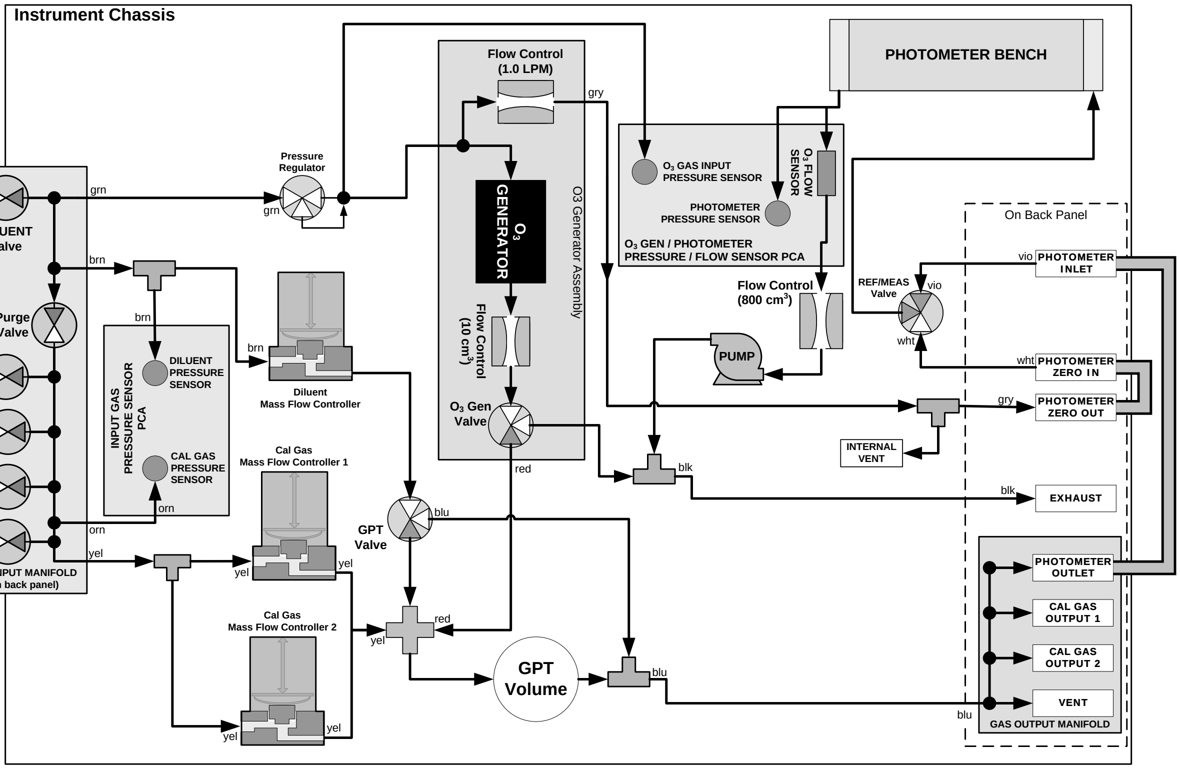
Instrument Chassis
DILUENT INLET
DILUENT Valve
Purge Valve
CAL GAS 1 INLET
CAL GAS 2 INLET
CAL GAS 3 INLET
CAL GAS 4 INLET
GAS INPUT MANIFOLD (on back panel)
grn
brn
orn
yel
Pressure Regulator
INPUT GAS PRESSURE SENSOR PCA
DILUENT PRESSURE SENSOR
CAL GAS PRESSURE SENSOR
Diluent Mass Flow Controller
Cal Gas Mass Flow Controller 1
Cal Gas Mass Flow Controller 2
GPT Valve
GPT Volume
Flow Control (1.0 LPM)
O3 GENERATOR
Flow Control (10 cm3)
O3 Gen Valve
O3 Generator Assembly
gry
red
blu
blk
O3 GAS INPUT PRESSURE SENSOR
PHOTOMETER PRESSURE SENSOR
O3 FLOW SENSOR
O3 GEN / PHOTOMETER PRESSURE / FLOW SENSOR PCA
PHOTOMETER BENCH
Flow Control (800 cm3)
PUMP
REF/MEAS Valve
vio
wht
INTERNAL VENT
On Back Panel
PHOTOMETER INLET
PHOTOMETER ZERO IN
PHOTOMETER ZERO OUT
EXHAUST
PHOTOMETER OUTLET
CAL GAS OUTPUT 1
CAL GAS OUTPUT 2
VENT
GAS OUTPUT MANIFOLD

Figure 3-29: T700 with Multiple Calibration Gas MFCs and O_3 Options 1A and 2A Installed

PERMEATION TUBE GAS GENERATOR PNEUMATICS AND SETUP

The permeation tube gas generator (see Figure 3-30) is an alternative method for producing known concentrations of stable gas such as SO_2, NO_2, etc. The generator consists of a temperature regulated permeation tube oven, a flow restrictor, an optional output desorber, and a user-supplied permeation tube. The optional desorber can improve the response time of the calibrator especially when operating with NO_2 tubes (when operating with sulfur based gases it MUST be removed).

The permeation tube consists of a small container of a liquefied gas, with a small window of PTFE through which the gas slowly permeates at a rate in the nanogram/min range. If the tube is kept at constant temperature, usually about 50°C, the device will provide a stable source of gas for a year or more. A pneumatic diagram of the T700 with this option is shown in Figure 3-31, including the generator.

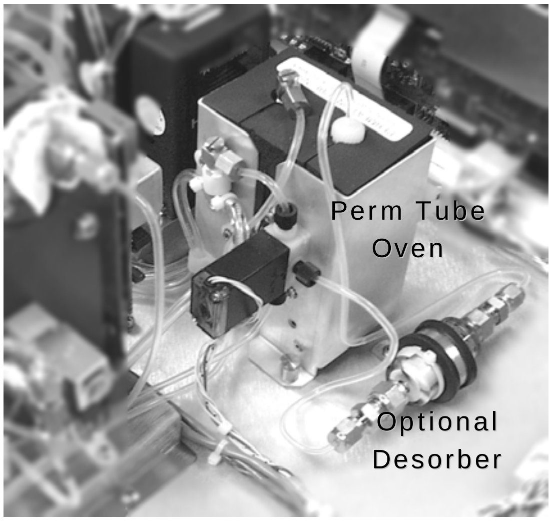
Perm Tube Oven
Optional Desorber

Figure 3-30: Permeation Tube Gas Generator Option

This page intentionally left blank.

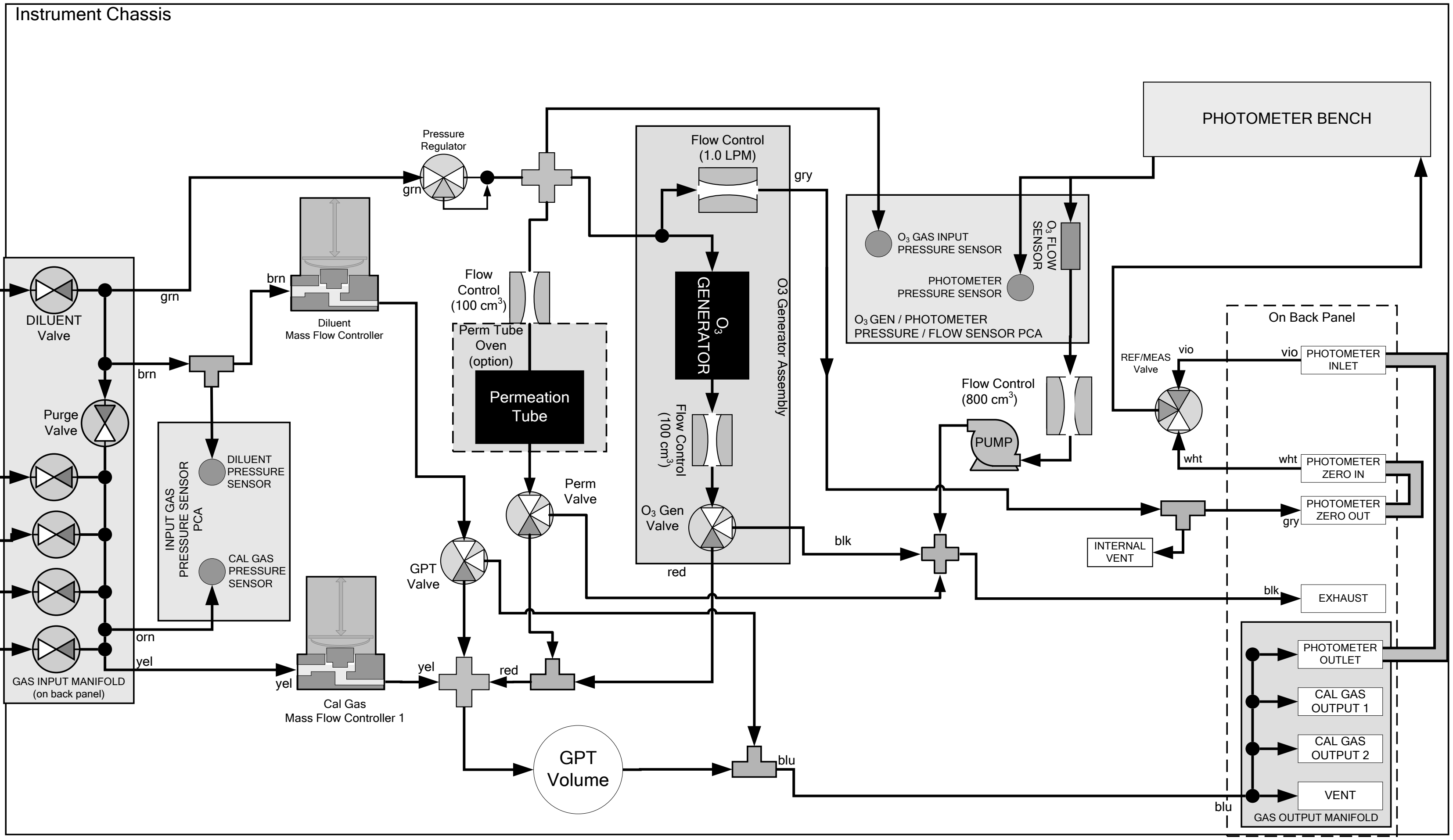
Instrument Chassis
PHOTOMETER BENCH
Pressure Regulator
grn
Flow Control (1.0 LPM)
gry
O3 GAS INPUT PRESSURE SENSOR
O3 FLOW SENSOR
PHOTOMETER PRESSURE SENSOR
O3 GEN / PHOTOMETER PRESSURE / FLOW SENSOR PCA
DILUENT INLET
DILUENT Valve
grn
brn
Diluent Mass Flow Controller
Flow Control (100 cm3)
O3 GENERATOR
O3 Generator Assembly
On Back Panel
REF/MEAS Valve
vio
vio
PHOTOMETER INLET
brn
Purge Valve
Perm Tube Oven (option)
Permeation Tube
Flow Control (100 cm3)
Flow Control (800 cm3)
PUMP
wht
wht
PHOTOMETER ZERO IN
CAL GAS 1 INLET
DILUENT PRESSURE SENSOR
INPUT GAS PRESSURE SENSOR PCA
Perm Valve
O3 Gen Valve
gry
PHOTOMETER ZERO OUT
CAL GAS 2 INLET
blk
INTERNAL VENT
CAL GAS 3 INLET
CAL GAS PRESSURE SENSOR
GPT Valve
red
blk
EXHAUST
CAL GAS 4 INLET
orn
yel
GAS INPUT MANIFOLD (on back panel)
yel
yel
red
PHOTOMETER OUTLET
Cal Gas Mass Flow Controller 1
CAL GAS OUTPUT 1
CAL GAS OUTPUT 2
GPT Volume
blu
VENT
blu
GAS OUTPUT MANIFOLD

Figure 3-31: Pneumatic Diagram of T700 with Permeation Generator

This page intentionally left blank.

Once installed and stabilized, generating a calibration gas from the T700 with a permeation generator is the same as if the gas was being produced using a gas cylinder as the source, with the following exceptions and note:

- If you need a particular flow and don't require a specific concentration, then use MANUAL mode. When generating in MANUAL mode, the output concentration is set by adjusting the DILUENT flow. The target and actual concentrations are displayed as test values.
- If you need a particular concentration but don't require a specific flow, then use AUTO mode. When generating in AUTO mode, the output concentration is set by entering the desired concentration. The TOTAL flow entry has no effect; the calibrator's output flow depends on the target concentration. Again, the target and actual concentrations as well as the target and actual flows will be indicated as test parameters.
- Please note that the name for the permeation tube gas MUST be different than any gas supplied to the calibrator from a bottle. For example if there is a H_2S permeation tube installed and a bottle of H_2S gas connected to the calibrator, one should be named H_2S, while the second should be named something like H_2S_2.

The generator is shipped WITHOUT a permeation tube installed. The tube MUST be removed during shipping or anytime that there is no diluent gas connected to the calibrator since there must be a continuous purge flow across the tube. Permeation tubes require 48 hours at 50°C to reach a stable output. We recommend waiting this long before any calibration checks, adjustments, or conclusions are reached about the permeation tube. Once the T700 has stabilized, the response to the permeation tube is not expected to change more than ± 5% if the zero air is provided for Teledyne API's M701 or other dry zero air source.

Teledyne API recommends that you purchase replacement permeation tubes from:

VICI METRONICS
2991 Corvin Drive
Santa Clara, CA 95051 USA
Phone 408-737-0550 Fax 408-737-0346

3.3.3. PERMEATION TUBE SETUP FOR THE T700

1. Press SETUP and GAS

```
SETUP X.X       PRIMARY SETUP MENU

  GAS    SEQ   CFG   CLK   PASS  MORE         EXIT
```

2. Press PERM

```
SETUP X.X       SOURCE GAS CONFIG

  CYL   PERM   USER                            EXIT
```

3. Enter the elution rate for the permeation tube and select the type of gas by pressing the gas button to scroll through the gas list until the desired gas is shown.

Note **The name of the gas produced by the permeation tube generator MUST be different from the name of any bottle connected to the calibrator.**

```
SETUP X.X      PERM TUBE 1:10.0 NGM NO2
  0    1    0    .0    NGM   NO2   ENTR   EXIT
```

4. Enter the gas flow through the permeation tube. This should be done with the flow standard connected at the outlet of the perm tube oven.

```
SETUP X.X      PERM TUBE 1:0.105   LPM
0    .1    0     5                ENTR     EXIT
```

3.3.4. PERMEATION TUBE CALCULATION

The permeation tube concentration is determined by the permeation tube’s specific output or elution rate (which is normally stated in ng/min), the permeation tube temperature (°C) and the air flow across it (slpm). The elution rate of the tube is normally stated at an operating temperature of 50°C and is usually printed on the tube's shipping container. By design, there is nominally 100 cm3/min of air flow across the tube and the tube is maintained at 50°C. The output of the calibrator is the product of the elution rate with the total of the 100 cm3/min through the generator and the flow of dilutant gas.

The temperature is set at 50.0°C. Check SETUP-MORE-VARS and scroll to the IZS-TEMP variable to verify that the temperature is properly set. It should be set to 50°C with over-and-under temperature warnings set at 49°C and 51°C. There is a 105 cm3/min flow across the permeation tube at all times to prevent build-up of the gas in the tubing.

This permeation tube source gas is diluted with zero air to generate desired concentration of the specific gas. The calibrator’s output concentration (gas concentration) can be calculated using the following equation:

$$C = \frac{P \times Km}{F}$$

Where:

P = permeation rate, ng/min @ 50°C.

Km = $\frac{24.46}{MW}$, where 24.46 is the molar volume in liters @ 25°C

and MW is the molecular weight.
760mmHg . Km for SO_2 = 0.382, NO_2 = 0.532, H_2S = 0.719, and NH_3 = 1.436.

F = total flow rate (sum of 100 cm^3/min and diluent flow), LPM.

C = concentration, ppm.

Thus, $$C = \frac{P}{F} \times \frac{24.46}{MW}$$

Where, Temperature at 50°C = 323

Temperature at 25°C = 298

DUAL GAS OUTPUT (NO$_Y$ – SPECIAL) (OPT 73)

The standard output manifold has been removed and replaced with 2 output fittings, labeled “Output A” and “Output B” (Figure 3-32). Output A is the primary calibration gas output, all calibration functions can be performed on this output. Output B is a secondary output, commonly used for NOy probe calibrations. This output cannot be used for ozone generation using the photometer feedback. It can be used for standard dilution calibrations as well as GPT using ozone.

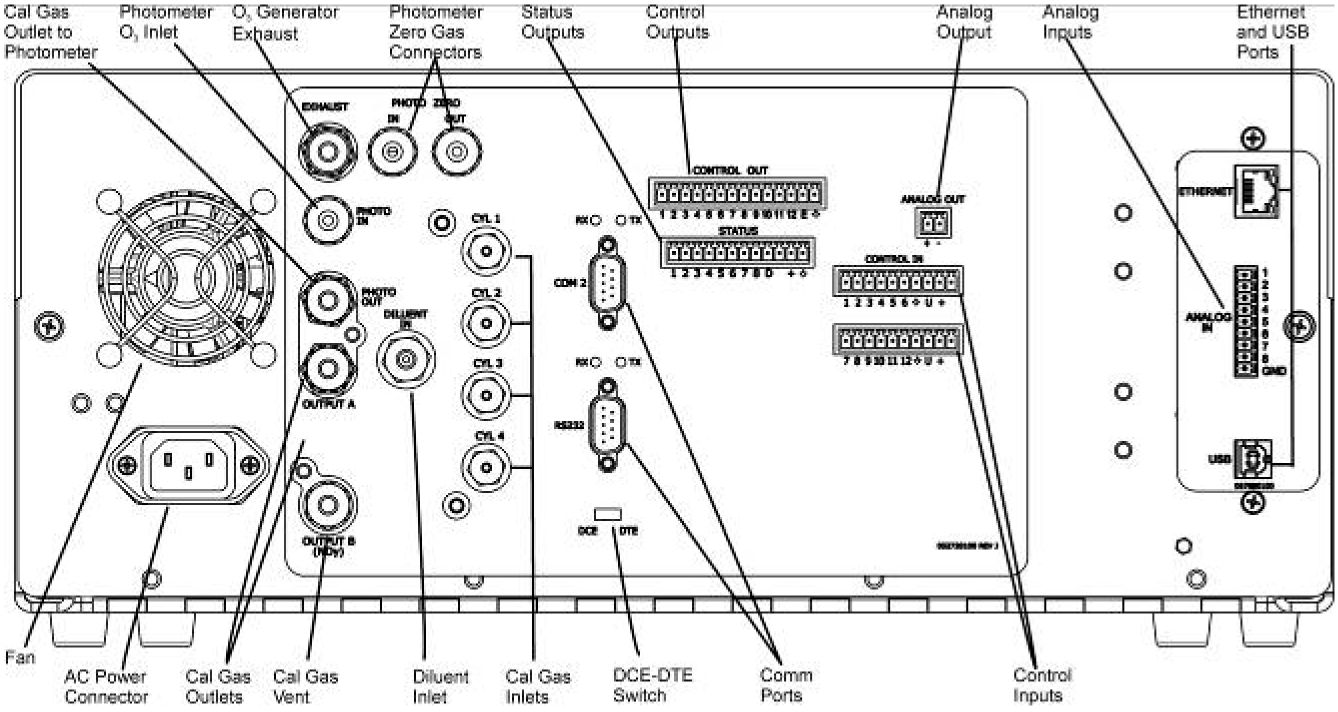
Cal Gas Outlet to Photometer
Photometer O$_3$ Inlet
O$_3$ Generator Exhaust
Photometer Zero Gas Connectors
Status Outputs
Control Outputs
Analog Output
Analog Inputs
Ethernet and USB Ports
EXHAUST
PHOTO IN
ZERO OUT
PHOTO IN
PHOTO OUT
OUTPUT A
OUTPUT B (NOy)
DILUENT IN
CYL 1
CYL 2
CYL 3
CYL 4
RX TX
COM 2
RX TX
RS232
DCE DTE
CONTROL OUT
1 2 3 4 5 6 7 8 9 10 11 12 E +
STATUS
1 2 3 4 5 6 7 8 D + 5
ANALOG OUT
+ -
CONTROL IN
1 2 3 4 5 6 + U +
7 8 9 10 11 12 + U +
ETHERNET
ANALOG IN
1 2 3 4 5 6 7 8 GND
USB
Fan
AC Power Connector
Cal Gas Outlets
Cal Gas Vent
Diluent Inlet
Cal Gas Inlets
DCE-DTE Switch
Comm Ports
Control Inputs

Figure 3-32: Rear Panel with Dual Output Option

When the dual gas output option is enabled, the output must be selected when generating gas. Use the following menu sequence: GEN>AUTO>[Select A or B]>ENTR. Your chosen output is now selected for calibration.

The following illustration depicts the pneumatic flow for the T700 Calibrator with the optional dual gas output at the output valve.

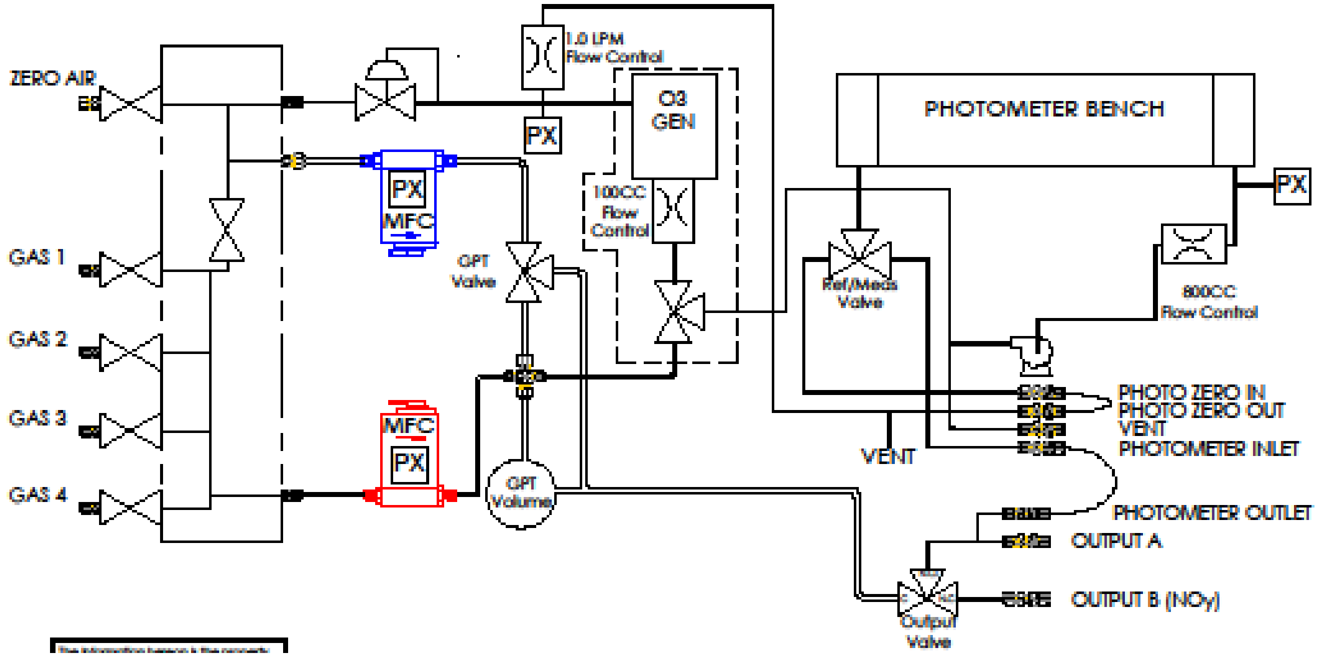
ZERO AIR
GAS 1
GAS 2
GAS 3
GAS 4
PX
MFC
PX
MFC
1.0 LPM Flow Control
PX
O3 GEN
100CC Flow Control
GPT Valve
GPT Volume
PHOTOMETER BENCH
PX
Ref/Meas Valve
800CC Flow Control
PHOTO ZERO IN
PHOTO ZERO OUT
VENT
PHOTOMETER INLET
VENT
PHOTOMETER OUTLET
OUTPUT A
OUTPUT B (NOy)
Output Valve

Figure 3-33: Internal Pneumatics for T700 Calibrator with Optional Dual Gas Output (NO_y – Special)

3.4. STARTUP, FUNCTIONAL CHECKS, AND INITIAL CALIBRATION

If you are unfamiliar with the T700 principles of operation, we recommend that you read Section 0.

For information on navigating the calibrator’s software menus, see the menu trees described in Appendix A.

3.4.1. START UP

After the electrical and pneumatic connections are made, an initial functional check is in order. Turn on the instrument. The exhaust fan (and pump if photometer option installed) should start immediately. The front panel display will show a splash screen and other information during the initialization process while the CPU loads the operating system, the firmware and the configuration data.

The calibrator should automatically switch to STANDBY mode after completing the brief boot-up sequence. However, the T700 dynamic dilution calibrator requires a minimum of 30 minutes for all of its internal components to reach a stable operating temperature. During the warm-up period, the front panel display may show messages in the Parameters field.

3.4.2. WARNING MESSAGES

Because internal temperatures and other conditions may be outside be specified limits during the calibrator’s warm-up period, the software will suppress most warning conditions for 30 minutes after power up. If warning messages persist after the 30 minutes warm up period is over, investigate their cause using the troubleshooting guidelines in Section 9 of this manual.

To view and clear warning messages, press:

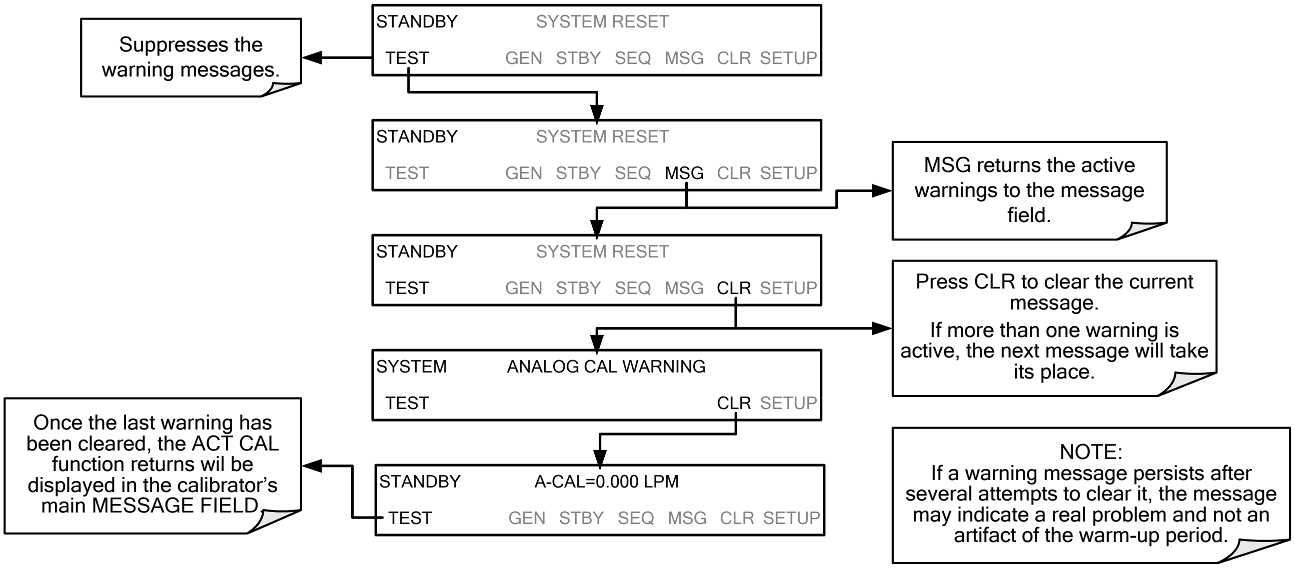
STANDBY SYSTEM RESET
TEST GEN STBY SEQ MSG CLR SETUP
STANDBY SYSTEM RESET
TEST GEN STBY SEQ MSG CLR SETUP
STANDBY SYSTEM RESET
TEST GEN STBY SEQ MSG CLR SETUP
SYSTEM ANALOG CAL WARNING
TEST CLR SETUP
STANDBY A-CAL=0.000 LPM
TEST GEN STBY SEQ MSG CLR SETUP

Suppresses the warning messages.

MSG returns the active warnings to the message field.

Press CLR to clear the current message.

If more than one warning is active, the next message will take its place.

Once the last warning has been cleared, the ACT CAL function returns wil be displayed in the calibrator’s main MESSAGE FIELD.

NOTE:
If a warning message persists after several attempts to clear it, the message may indicate a real problem and not an artifact of the warm-up period.

Table 3-17: Possible Warning Messages at Start-Up

MESSAGE	MEANING
ANALOG CAL WARNING	The calibrator’s A/D converter or at least one analog input channel has not been calibrated.
CONFIG INITIALIZED	Stored Configuration information has been reset to the factory settings or has been erased.
DATA INITIALIZED	The calibrator’s data storage was erased.
LAMP DRIVER WARN[1, 2]	The firmware is unable to communicate with either the O_3 generator or photometer lamp I^2C driver chips.[1, 2]
MFC CALIBRATION WARNING	The flow setting for one of the calibrator's mass flow controllers is less than 10% or greater than 100% of the flow rating for that controller.
MFC COMMUNICATION WARNING	Firmware is unable to communicate with any MFC.
MFC FLOW WARNING[3]	One of the calibrator’s mass flow controllers is being driven at less than 10% of full scale or greater than full scale.
MFC PRESSURE WARNING	One of the calibrator’s mass flow controllers internal gas pressure is outside of allowable limits.
O3 GEN LAMP TEMP WARNING[1]	The O_3 generator lamp temperature is outside of allowable limits.[1]
O3 PUMP WARNING[1]	The pump associated with the O_3 photometer has failed to turn on.[1]
PHOTO LAMP TEMP WARNING[2]	The photometer lamp temperature is outside of allowable limits.[2]
PHOTO LAMP STABILITY WARNING	Photometer lamp reference step changes occur more than 25% of the time.

MESSAGE	MEANING
PHOTO REFERENCE WARNING[2]	The photometer reference reading is outside of allowable limits.[2]
REAR BOARD NOT DET	The calibrator's motherboard was not detected during power up. - This warning only appears on Serial I/O COMM Port(s). - The front panel display will be frozen, blank or will not respond.
REGULATOR PRESSURE WARNING	The gas pressure regulator associated with the internal O_3 generator option is reporting a pressure outside of allowable limits.
RELAY BOARD WARN	The firmware is unable to communicate with the calibrator's relay PCA.
SYSTEM RESET	The calibrator has been turned off and on or the CPU was reset.
VALVE BOARD WARN	The firmware is unable to communicate with the valve controller board.

[1] Only applicable for calibrators with the optional the O_3 generator installed.

[2] Only applicable for calibrators with the optional photometer installed.

[3] On instruments with multiple Cal Gas MFCs installed, the **MFC FLOW WARNING** occurs when the flow rate requested is <10% of the range of the lowest rated MFC (i.e. all of the cal gas MFC are turned off).

3.4.3. FUNCTIONAL CHECKS

After the calibrator's components have warmed up for at least 30 minutes, verify that the software properly supports any hardware options that are installed.

Check to ensure that the calibrator is functioning within allowable operating parameters. Appendix C includes a list of test functions viewable from the calibrator's front panel as well as their expected values. These functions are also useful tools for diagnosing problems with your calibrator (Section 9.1.2). The enclosed Final Test and Validation Data sheet (P/N 05731) lists these values before the instrument left the factory.

To view the current values of these parameters press the following button sequence on the calibrator's front panel. Remember that until the unit has completed its warm-up, these parameters may not have stabilized.

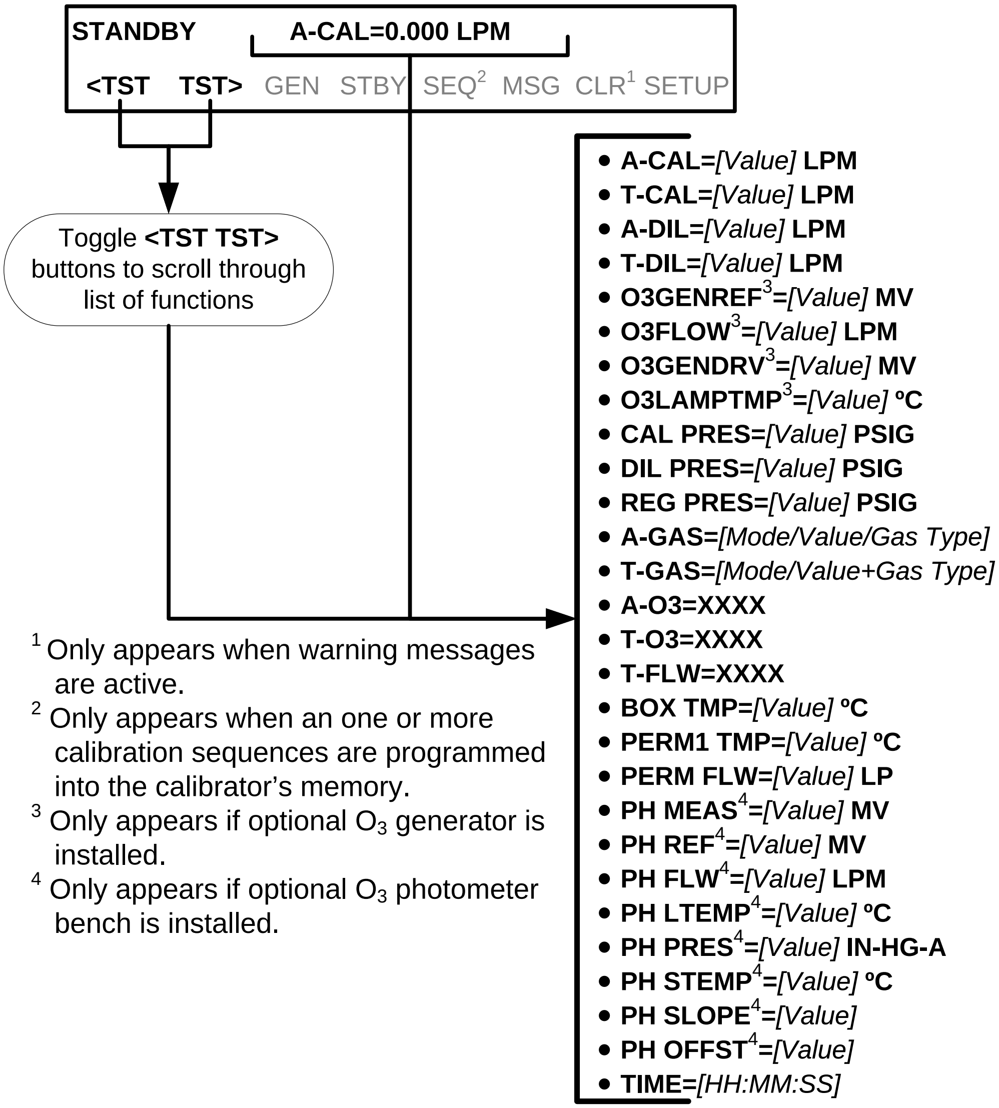
STANDBY
A-CAL=0.000 LPM
<TST TST> GEN STBY SEQ^2 MSG CLR^1 SETUP
Toggle <TST TST> buttons to scroll through list of functions

- **A-CAL=***[Value]* **LPM**
- **T-CAL=***[Value]* **LPM**
- **A-DIL=***[Value]* **LPM**
- **T-DIL=***[Value]* **LPM**
- **O3GENREF**^{3}**=***[Value]* **MV**
- **O3FLOW**^{3}**=***[Value]* **LPM**
- **O3GENDRV**^{3}**=***[Value]* **MV**
- **O3LAMPTMP**^{3}**=***[Value]* **ºC**
- **CAL PRES=***[Value]* **PSIG**
- **DIL PRES=***[Value]* **PSIG**
- **REG PRES=***[Value]* **PSIG**
- **A-GAS=***[Mode/Value/Gas Type]*
- **T-GAS=***[Mode/Value+Gas Type]*
- **A-O3=XXXX**
- **T-O3=XXXX**
- **T-FLW=XXXX**
- **BOX TMP=***[Value]* **ºC**
- **PERM1 TMP=***[Value]* **ºC**
- **PERM FLW=***[Value]* **LP**
- **PH MEAS**^{4}**=***[Value]* **MV**
- **PH REF**^{4}**=***[Value]* **MV**
- **PH FLW**^{4}**=***[Value]* **LPM**
- **PH LTEMP**^{4}**=***[Value]* **ºC**
- **PH PRES**^{4}**=***[Value]* **IN-HG-A**
- **PH STEMP**^{4}**=***[Value]* **ºC**
- **PH SLOPE**^{4}**=***[Value]*
- **PH OFFST**^{4}**=***[Value]*
- **TIME=***[HH:MM:SS]*

[1] Only appears when warning messages are active.

[2] Only appears when an one or more calibration sequences are programmed into the calibrator's memory.

[3] Only appears if optional O_3 generator is installed.

[4] Only appears if optional O_3 photometer bench is installed.

If your calibrator is operating via Ethernet and your network is running a dynamic host configuration protocol (DHCP) software package, the Ethernet will automatically configure its interface with your LAN. However, it is a good idea to check these settings to ensure that the DHCP has successfully downloaded the appropriate network settings from your network server (See Section 5.4.1).

If your network is not running DHCP or if you wish to establish a more permanent Ethernet connection, you will have to configure the calibrator's Ethernet interface manually (See Section 5.4.1.1).

3.4.4. SETTING UP THE CALIBRATION GAS INLET PORTS

The T700 Dynamic Dilution Calibrator generates calibration gases of various concentrations by precisely mixing component gases of known concentrations with diluent (zero air). When the instrument is equipped with the optional O_3 generator and photometer, it can also use the gas phase titration method for generating very precise concentrations of NO_2.

In either case, it is necessary to program the concentrations of the component gases being used into the T700's memory.

3.4.5. DEFAULT GAS TYPES

The T700 calibrator is programmed with the following default gas types corresponding to the most commonly used component gases:

Table 3-18: T700 Default Gas Types

NAME	GAS TYPE
NONE	Used for gas inlet ports where no gas bottle is attached
SO_2	sulfur dioxide
H_2S	hydrogen sulfide
N_2O	nitrous oxide
NO	nitric oxide
NO_2	nitrogen dioxide
NH_3	Ammonia[1]
CO	carbon monoxide, and;
CO_2	carbon dioxide
HC	General abbreviation for hydrocarbon
[1] It is not recommended that ammonia be used in the T700.	

3.4.6. USER DEFINED GAS TYPES

3.4.6.1. User Defined Gas Types – General

The T700 calibrator can accept up to four different user defined gases. This allows the use of:

- Less common component gases not included in the T700's default list;
- More than one bottle of the same gas but at different concentrations. In this case, different user-defined names are created for the different bottles of gas.

EXAMPLE: Two bottles of CO_2 are being used, allow the calibrator to create two different CO_2 calibration gases at the same flow rate.

Since identical names must not be assigned to two different bottles, one bottle can be programmed using the default name “CO2” and the other bottle programmed by assigning a user defined name such as “CO2A”.

Alternatively, both bottles can be assigned user defined names; e.g. CO2A and CO2B

User defined gas names are added to the T700’s gas library and will appear as choices during the various calibrator operations along with the default gas names listed in Section 3.4.5.

In its default state, the T700’s four user defined gases are named usr1, usr2, usr3 and usr4, each with a default MOLAR mass of 28.890 (the MOLAR mass of ambient air). All four are enabled.

To define a gas you must first define the GAS NAME and then set the MOLAR MASS.

3.4.6.2. **User Defined Gas Types – Defining the Gas Name**

In this example, we will be using PROPANE (C_2H_8). Press:

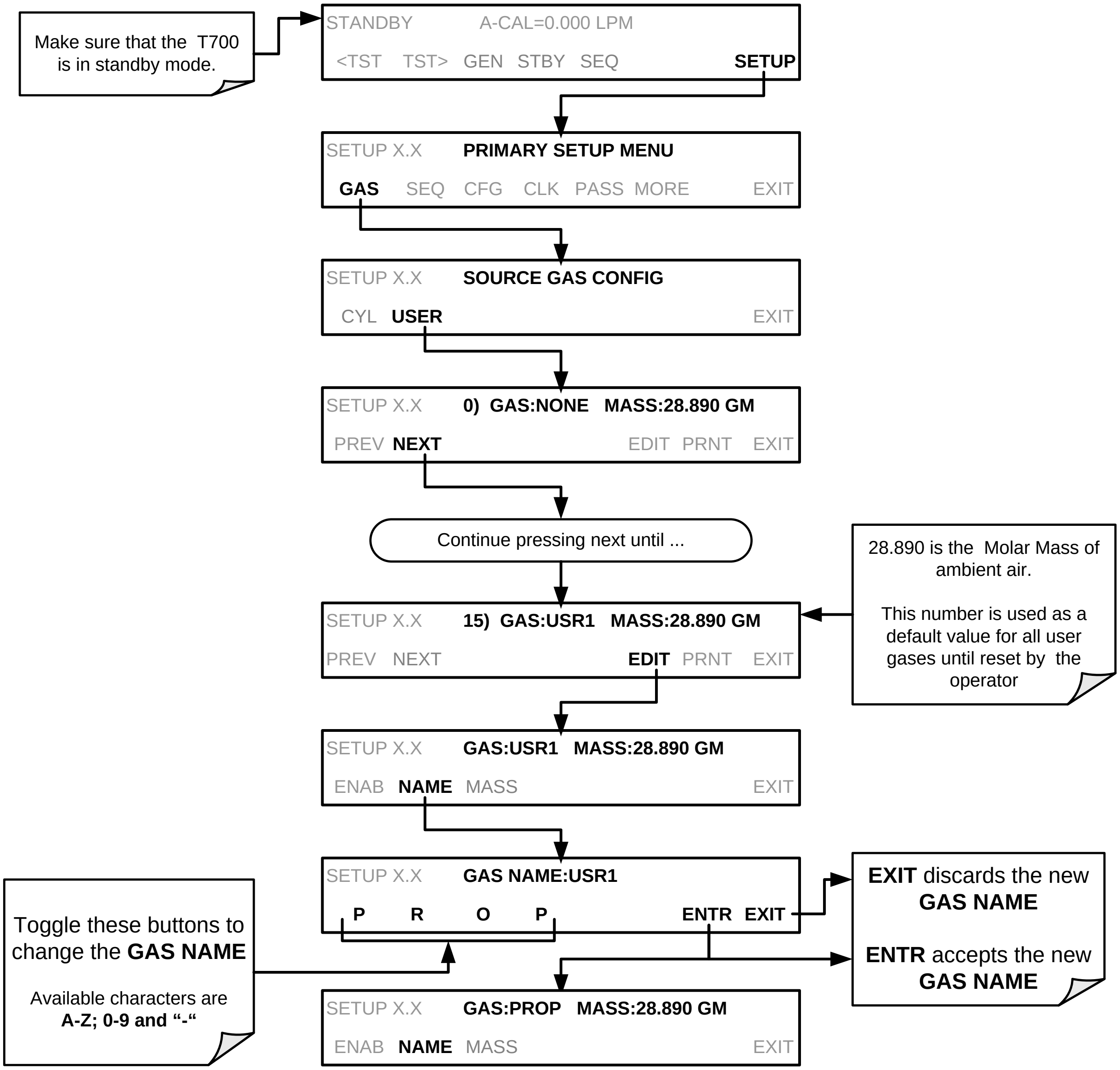

STANDBY A-CAL=0.000 LPM
<TST TST> GEN STBY SEQ SETUP
SETUP X.X PRIMARY SETUP MENU
GAS SEQ CFG CLK PASS MORE EXIT
SETUP X.X SOURCE GAS CONFIG
CYL USER EXIT
SETUP X.X 0) GAS:NONE MASS:28.890 GM
PREV NEXT EDIT PRNT EXIT
Continue pressing next until ...
SETUP X.X 15) GAS:USR1 MASS:28.890 GM
PREV NEXT EDIT PRNT EXIT
SETUP X.X GAS:USR1 MASS:28.890 GM
ENAB NAME MASS EXIT
SETUP X.X GAS NAME:USR1
P R O P ENTR EXIT
SETUP X.X GAS:PROP MASS:28.890 GM
ENAB NAME MASS EXIT

Make sure that the T700 is in standby mode.

28.890 is the Molar Mass of ambient air.

This number is used as a default value for all user gases until reset by the operator

Toggle these buttons to change the **GAS NAME**

Available characters are **A-Z; 0-9 and "-"**

EXIT discards the new **GAS NAME**

ENTR accepts the new **GAS NAME**

Alternatively, one could use the chemical formula for this gas, c_2h_8 or any other 4-letter name(e.g., PRPN, MY-1, etc.)

Note **If you have the same type of gas, but two different concentrations (for example, two concentrations of CO_2), assign the second concentration to one of the user defined gases (e.g. CO2 {default name} and CO2B {user defined}).**

3.4.6.3. **User Defined Gas Types – Setting the MOLAR MASS**

The molar mass of a substance is the mass, expressed in grams, of 1 mole of that specific substance. Conversely, one mole is the amount of the substance needed for the molar mass to be the same number in grams as the atomic mass of that substance.

EXAMPLE: The atomic weight of Carbon is 12.011 therefore the molar mass of Carbon is 12.011 grams, conversely, one mole of carbon equals the amount of carbon atoms that weighs 12.011 grams.

Atomic weights can be found on any Periodic Table of Elements.

To determine the Molar mass of a gas, add together the atomic weights of the elements that make up the gas.

EXAMPLE: The chemical formula for Propane is $\mathbf{C_2H_8}$. Therefore the molecular mass of propane is:

$$(12.011 \times 2) + (1.008 \times 8) = 24.022 + 8.064 = \mathbf{32.086}$$

To set the molar mass of a user defined gas, press:

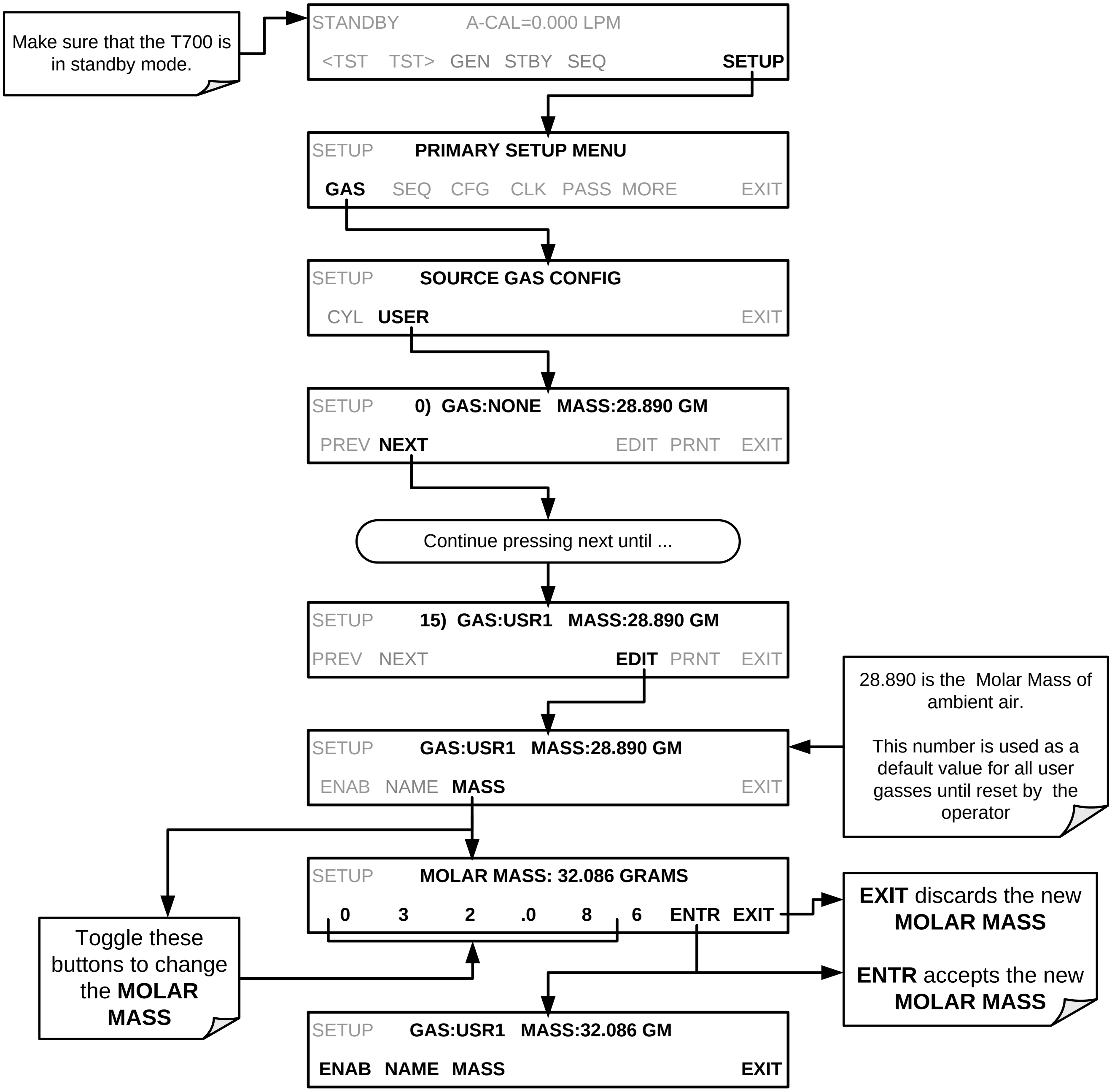
STANDBY A-CAL=0.000 LPM
<TST TST> GEN STBY SEQ SETUP
SETUP PRIMARY SETUP MENU
GAS SEQ CFG CLK PASS MORE EXIT
SETUP SOURCE GAS CONFIG
CYL USER EXIT
SETUP 0) GAS:NONE MASS:28.890 GM
PREV NEXT EDIT PRNT EXIT
SETUP 15) GAS:USR1 MASS:28.890 GM
PREV NEXT EDIT PRNT EXIT
SETUP GAS:USR1 MASS:28.890 GM
ENAB NAME MASS EXIT
SETUP MOLAR MASS: 32.086 GRAMS
0 3 2 .0 8 6 ENTR EXIT
SETUP GAS:USR1 MASS:32.086 GM
ENAB NAME MASS EXIT

Make sure that the T700 is in standby mode.

Continue pressing next until ...

28.890 is the Molar Mass of ambient air.

This number is used as a default value for all user gasses until reset by the operator

Toggle these buttons to change the **MOLAR MASS**

EXIT discards the new **MOLAR MASS**

ENTR accepts the new **MOLAR MASS**

Note **If the contents of the bottle are predominantly N_2, use the molar mass of N_2 (28.01).**

3.4.6.4. **Enabling and Disabling Gas Types**

By default, all of the gases listed in Section 3.4.5 and the four undefined **USER** gases are **ENABLED.** Any of these can be disabled. Disabling a gas type means that it does not appear in certain prompts during portions of the T700’s operation (e.g. setting up sequences) and is not figured into the calibrators calculating when determining calibration mixtures.

To disable a gas type, press:

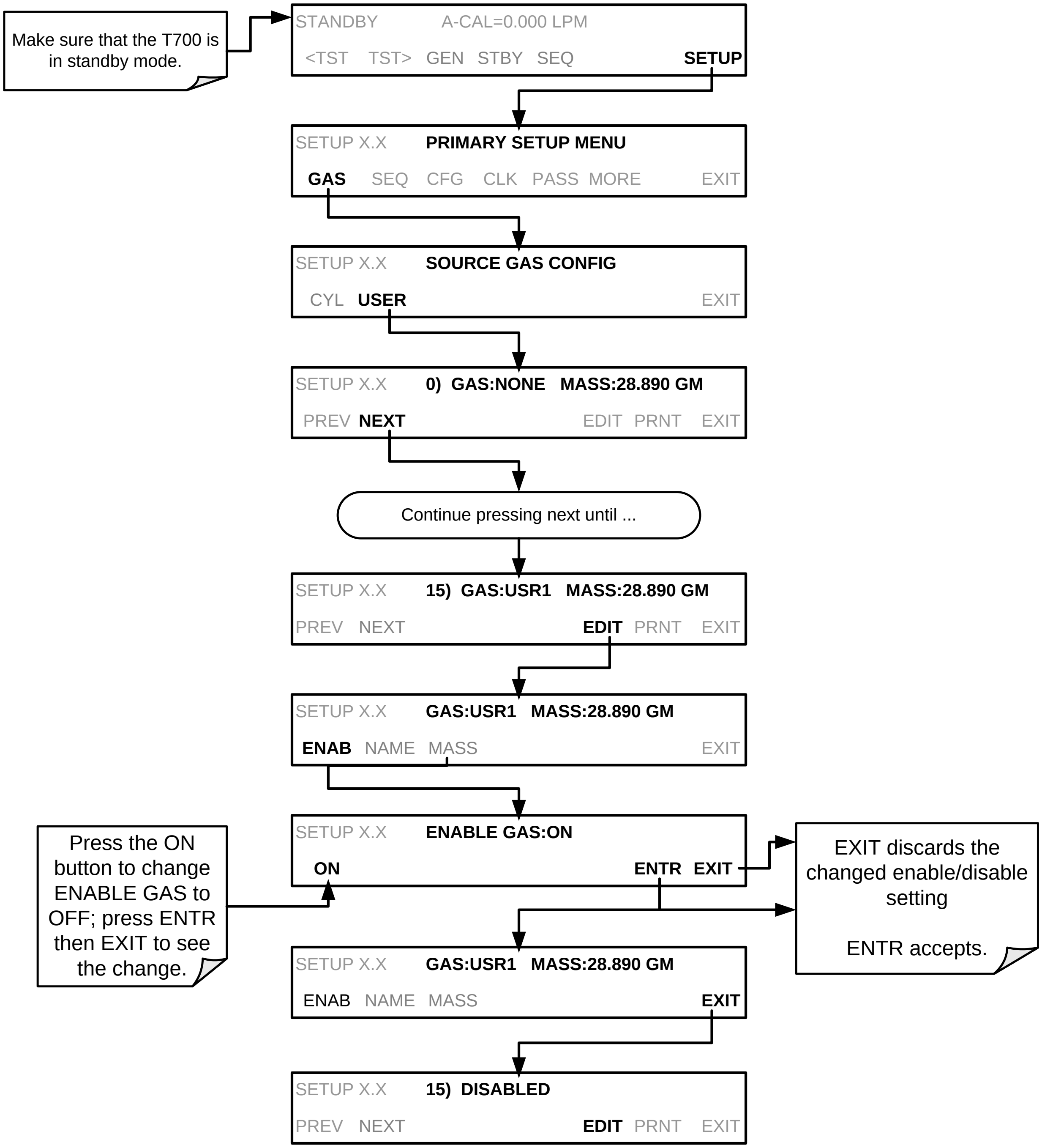

Make sure that the T700 is in standby mode.

Continue pressing next until ...

Press the ON button to change ENABLE GAS to OFF; press ENTR then EXIT to see the change.

EXIT discards the changed enable/disable setting

ENTR accepts.

STANDBY A-CAL=0.000 LPM
<TST TST> GEN STBY SEQ SETUP
SETUP X.X PRIMARY SETUP MENU
GAS SEQ CFG CLK PASS MORE EXIT
SETUP X.X SOURCE GAS CONFIG
CYL USER EXIT
SETUP X.X 0) GAS:NONE MASS:28.890 GM
PREV NEXT EDIT PRNT EXIT
SETUP X.X 15) GAS:USR1 MASS:28.890 GM
PREV NEXT EDIT PRNT EXIT
SETUP X.X GAS:USR1 MASS:28.890 GM
ENAB NAME MASS EXIT
SETUP X.X ENABLE GAS:ON
ON ENTR EXIT
SETUP X.X GAS:USR1 MASS:28.890 GM
ENAB NAME MASS EXIT
SETUP X.X 15) DISABLED
PREV NEXT EDIT PRNT EXIT

3.4.7. DEFINING CALIBRATION SOURCE GAS CYLINDERS

3.4.7.1. Setting Up the Ports with Single Gas Cylinders

To program the T700 calibrator's source gas input ports for a single gas cylinder, press:

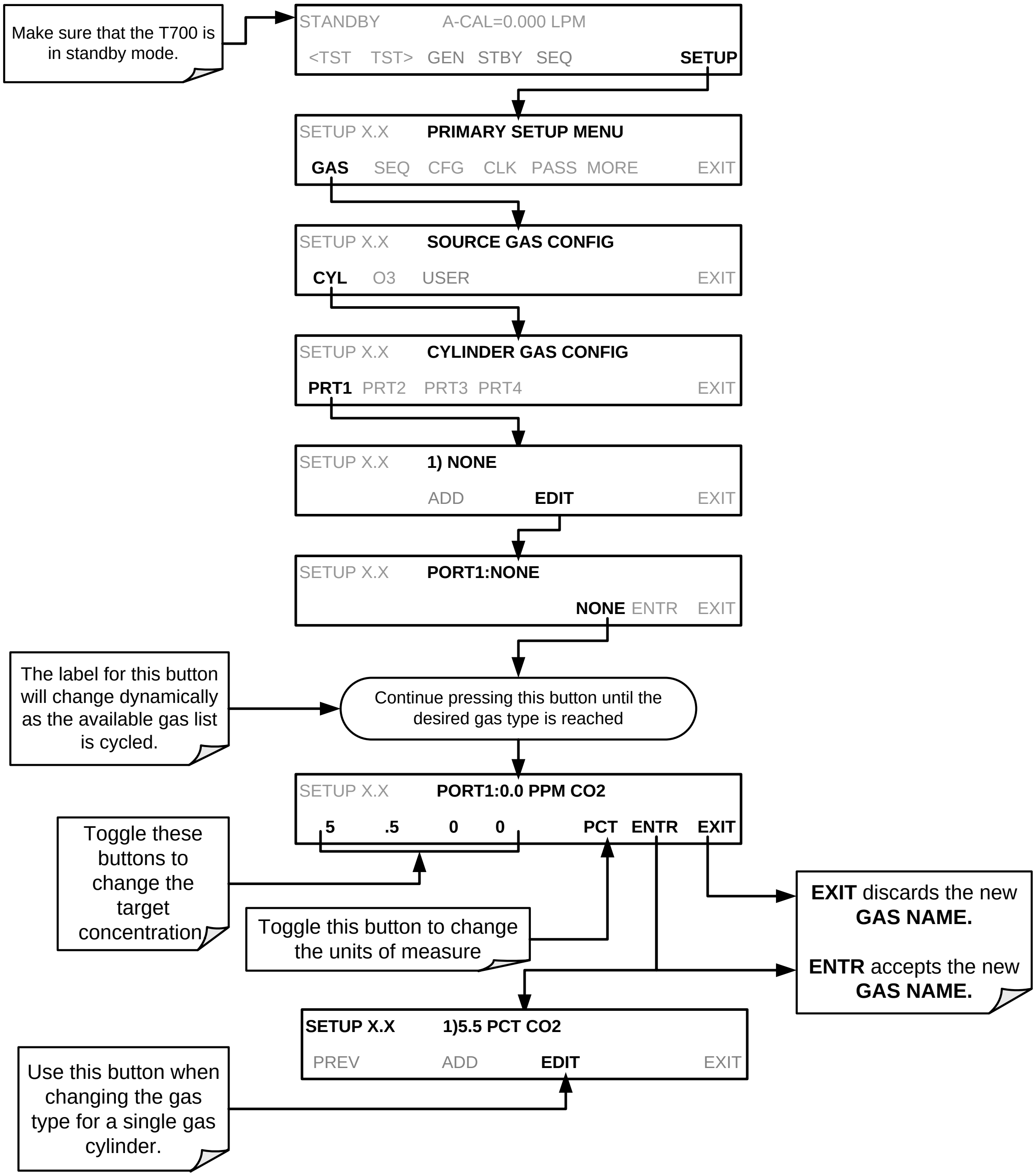
STANDBY A-CAL=0.000 LPM
<TST TST> GEN STBY SEQ SETUP
SETUP X.X PRIMARY SETUP MENU
GAS SEQ CFG CLK PASS MORE EXIT
SETUP X.X SOURCE GAS CONFIG
CYL O3 USER EXIT
SETUP X.X CYLINDER GAS CONFIG
PRT1 PRT2 PRT3 PRT4 EXIT
SETUP X.X 1) NONE
ADD EDIT EXIT
SETUP X.X PORT1:NONE
NONE ENTR EXIT
SETUP X.X PORT1:0.0 PPM CO2
5 .5 0 0 PCT ENTR EXIT
SETUP X.X 1)5.5 PCT CO2
PREV ADD EDIT EXIT

Make sure that the T700 is in standby mode.

The label for this button will change dynamically as the available gas list is cycled.

Continue pressing this button until the desired gas type is reached

Toggle these buttons to change the target concentration

Toggle this button to change the units of measure

EXIT discards the new **GAS NAME.**

ENTR accepts the new **GAS NAME.**

Use this button when changing the gas type for a single gas cylinder.

Table 3-19: T700 Units of Measure List

SYMBOL	UNITS	RESOLUTION
PPM	parts per million	000.0
PPB	parts per billion	000.0
MGM	milligrams per cubic meter	000.0
UGM	micrograms per cubic meter	000.0
PCT	percent	0.000
PPT	parts per thousand	00.00

Repeat the above steps for each of the T700 calibrator’s four gas inlet ports. If no gas is present on a particular port, leave it set at the default setting of **NONE.**

3.4.7.2. Setting Up the Ports with Multiple Gas Cylinders

When an application utilizes multiple gas cylinders, program as follows (note that the GENERATE>AUTO menu (Section 4.2.6) differs from that for a single gas (Section 4.2.1):

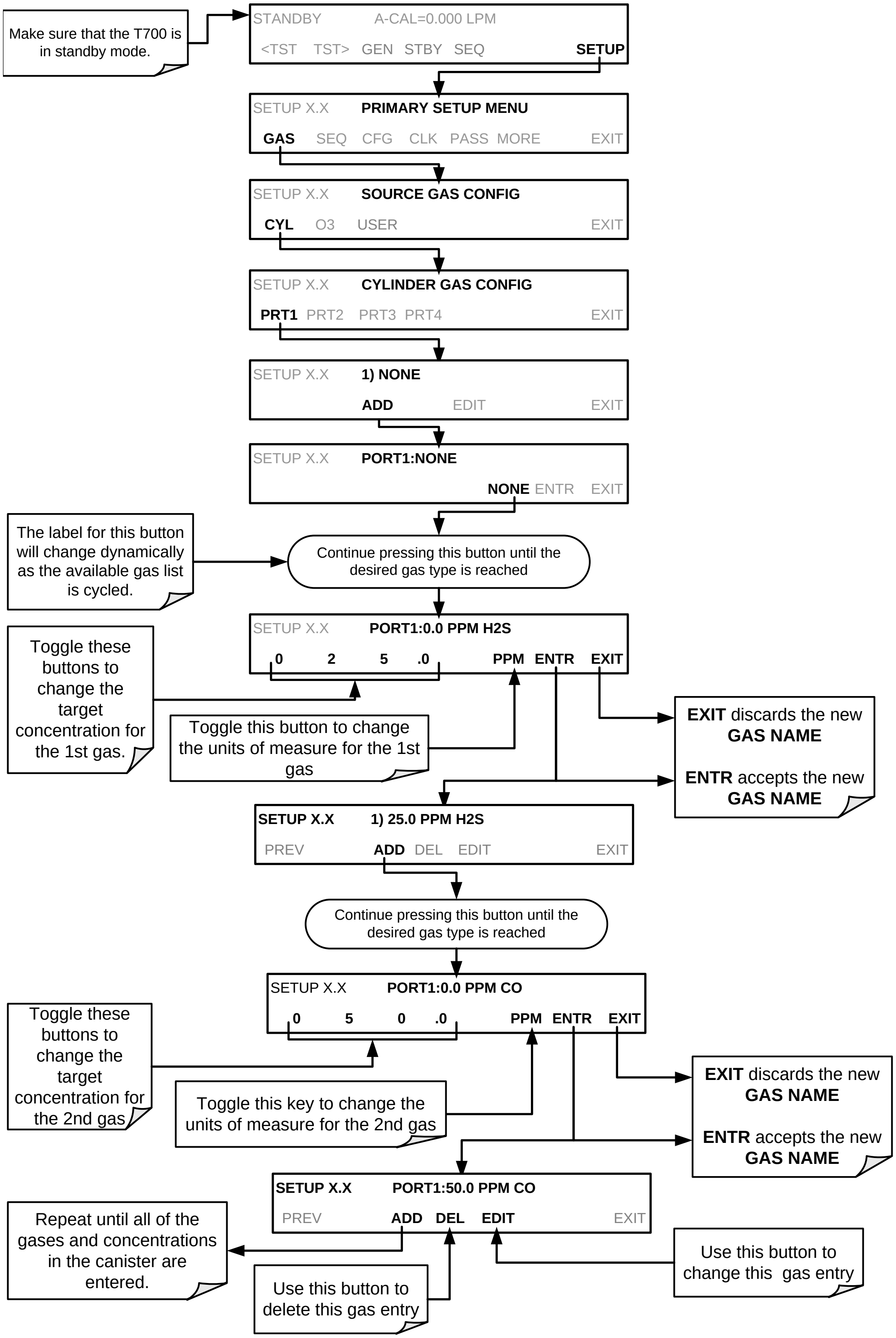
STANDBY A-CAL=0.000 LPM
<TST TST> GEN STBY SEQ SETUP
SETUP X.X PRIMARY SETUP MENU
GAS SEQ CFG CLK PASS MORE EXIT
SETUP X.X SOURCE GAS CONFIG
CYL O3 USER EXIT
SETUP X.X CYLINDER GAS CONFIG
PRT1 PRT2 PRT3 PRT4 EXIT
SETUP X.X 1) NONE
ADD EDIT EXIT
SETUP X.X PORT1:NONE
NONE ENTR EXIT
SETUP X.X PORT1:0.0 PPM H2S
0 2 5 .0 PPM ENTR EXIT
SETUP X.X 1) 25.0 PPM H2S
PREV ADD DEL EDIT EXIT
SETUP X.X PORT1:0.0 PPM CO
0 5 0 .0 PPM ENTR EXIT
SETUP X.X PORT1:50.0 PPM CO
PREV ADD DEL EDIT EXIT

Make sure that the T700 is in standby mode.

The label for this button will change dynamically as the available gas list is cycled.

Continue pressing this button until the desired gas type is reached

Toggle these buttons to change the target concentration for the 1st gas.

Toggle this button to change the units of measure for the 1st gas

EXIT discards the new **GAS NAME**

ENTR accepts the new **GAS NAME**

Continue pressing this button until the desired gas type is reached

Toggle these buttons to change the target concentration for the 2nd gas

Toggle this key to change the units of measure for the 2nd gas

EXIT discards the new **GAS NAME**

ENTR accepts the new **GAS NAME**

Repeat until all of the gases and concentrations in the canister are entered.

Use this button to delete this gas entry

Use this button to change this gas entry

3.4.8. SELECTING AN OPERATING MODE FOR THE O3 GENERATOR

The O_3 generator can be set to operate in two different modes: Constant and Bench.

3.4.8.1. CNST (CONSTANT)

In this mode, the O_3 output of the generator is based on a single, constant, drive voltage. There is no Feedback loop control by the T700's CPU in this mode.

3.4.8.2. BNCH (BENCH)

The O_3 concentration control loop will use the photometer's O_3 measurement as input. To select a default O_3 generator mode, press:

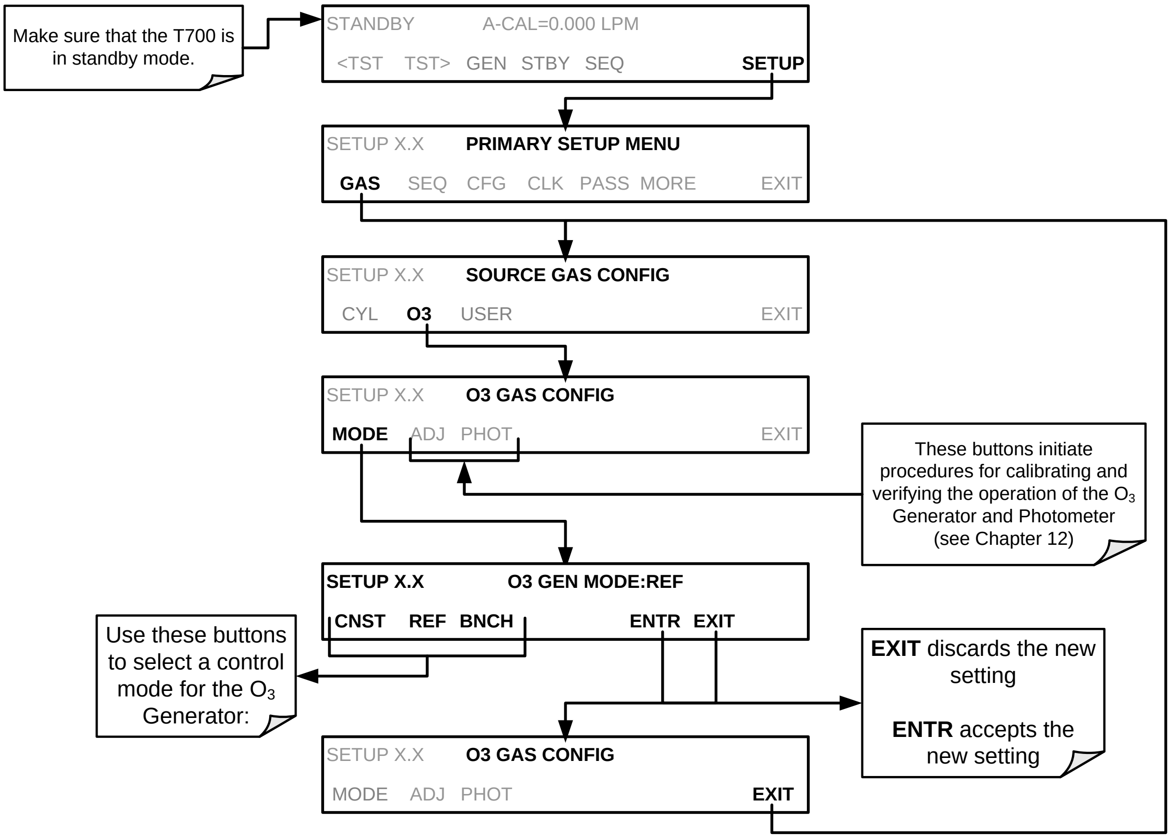
Make sure that the T700 is in standby mode.
STANDBY A-CAL=0.000 LPM
<TST TST> GEN STBY SEQ SETUP
SETUP X.X PRIMARY SETUP MENU
GAS SEQ CFG CLK PASS MORE EXIT
SETUP X.X SOURCE GAS CONFIG
CYL O3 USER EXIT
SETUP X.X O3 GAS CONFIG
MODE ADJ PHOT EXIT
These buttons initiate procedures for calibrating and verifying the operation of the O3 Generator and Photometer (see Chapter 12)
SETUP X.X O3 GEN MODE:REF
CNST REF BNCH ENTR EXIT
Use these buttons to select a control mode for the O3 Generator:
EXIT discards the new setting
ENTR accepts the new setting
SETUP X.X O3 GAS CONFIG
MODE ADJ PHOT EXIT

3.4.9. SETTING THE T700’S TOTAL GAS FLOW RATE

The default total gas flow rate for the T700 Dynamic Dilution Calibrator is 2 LPM. The calibrator uses this flow rate, along with the concentrations programmed into the calibrator for the component gas cylinders during set up, to compute individual flow rates for both diluent gas and calibration source gases in order to produce calibration mixtures that match the desired output concentrations.

This Total Flow rate may be changed to fit the users’ application. Once the flow is changed, then the new flow value becomes the total flow for all the gas concentration generated and computes again the individual flow rates of the component gases and diluent accordingly.

Note

- **The minimum total flow should equal 150% of the flow requirements of all of the instruments to which the T700 will be supplying calibration gas.**
- **Example: If the T700 is will be expected to supply calibration gas mixtures simultaneously to a system in composed of three analyzers each requiring 2 LPM , the proper Total Flow output should be set at:**

(2 + 2 + 2) x 1.5 = 9.000 LPM

To set the **TOTAL FLOW** of the of the T700 Dynamic Dilution Calibrator, press:

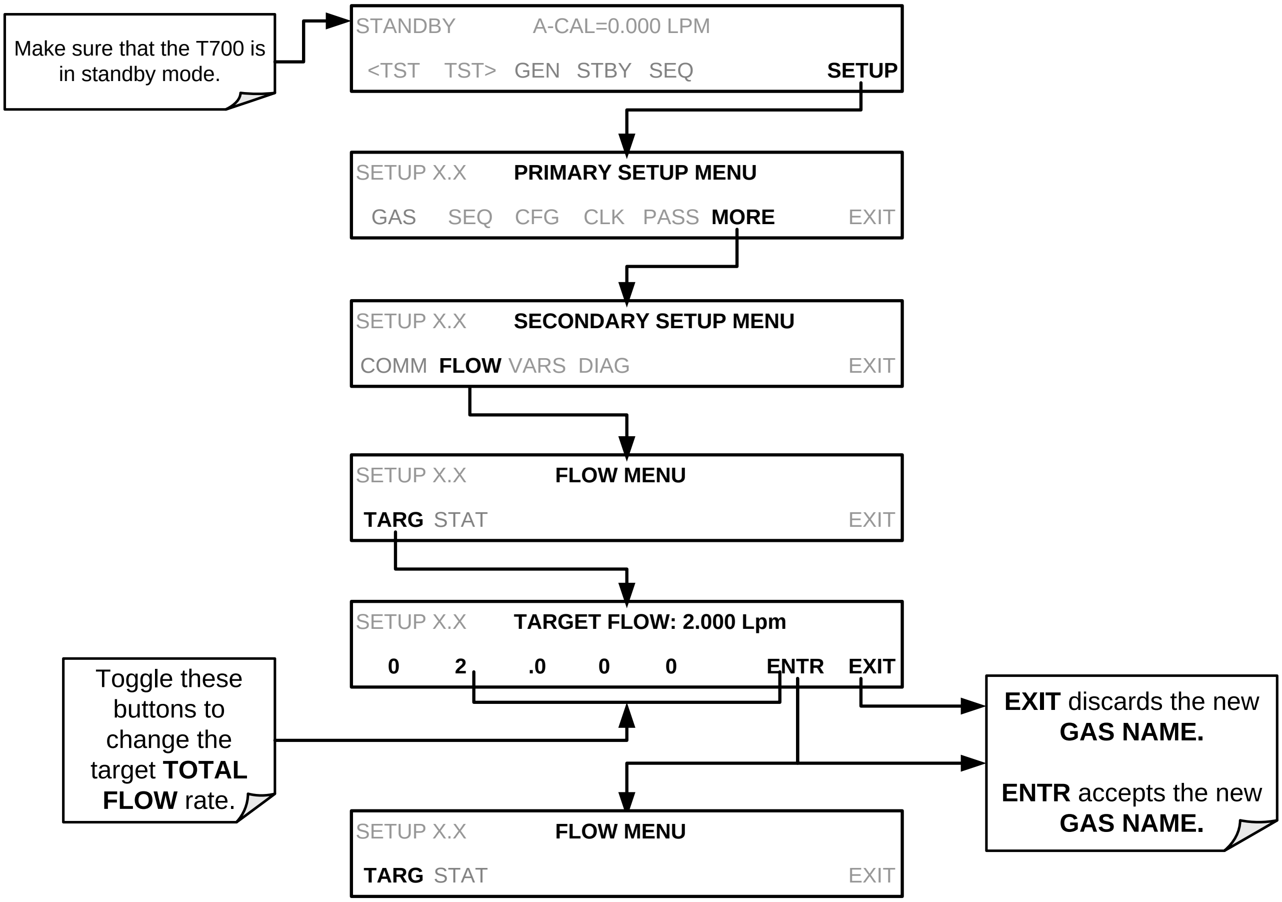
Make sure that the T700 is in standby mode.

Toggle these buttons to change the target **TOTAL FLOW** rate.

EXIT discards the new **GAS NAME.**

ENTR accepts the new **GAS NAME.**

STANDBY A-CAL=0.000 LPM
<TST TST> GEN STBY SEQ SETUP
SETUP X.X PRIMARY SETUP MENU
GAS SEQ CFG CLK PASS MORE EXIT
SETUP X.X SECONDARY SETUP MENU
COMM FLOW VARS DIAG EXIT
SETUP X.X FLOW MENU
TARG STAT EXIT
SETUP X.X TARGET FLOW: 2.000 Lpm
0 2 .0 0 0 ENTR EXIT
SETUP X.X FLOW MENU
TARG STAT EXIT

Note

It is not recommended that you set the TOTAL FLOW rate to be <10% or >100% of the full scale rating of the diluent MFC

The **TOTAL FLOW** is also affected by the following:

- The **GENERATE > AUTO** menu (see Section 4.2.1) or;
- As part of a **GENERATE** step when programming a sequence (see Section 4.3.2.1).

The operator can individually set both the diluent flow rate and flow rates for the component gas cylinders as part of the following:

- The **GENERATE > MANUAL** menu (see Section 4.2.2) or;
- As part of a **MANUAL** step when programming a sequence (see Section 4.3.2.9).

Note **When calculating total required flow for T700's with O_3 photometers installed ensure to account for the 800 cc/min flow it requires.**

This page intentionally left blank..

4. OVERVIEW OF OPERATING MODES AND BASIC OPERATION

The T700 calibrator is a micro-computer-controlled calibrator with a dynamic menu interface for easy and yet powerful and flexible operation. All major operations are controlled from the front panel touch screen control.

To assist in navigating the system's software, a series of menu trees can be found in Appendix A of this manual.

Note **The flowcharts in this section depict the manner in which the front panel touch screen is used to operate the T700 Dynamic Dilution Calibrator. They depict typical representations of the display during the various operations being described. They are not intended to be exact and may differ slightly from the actual display of your system.**

Note **The ENTR button may disappear if you select a setting that is invalid or out of the allowable range for that parameter, such as trying to set the 24-hour clock to 25:00:00. Once you adjust the setting to an allowable value, the ENTR button will reappear.**

The T700 calibrator software has a variety of operating modes, which are controlled from the front panel touch screen. (Remote operation is described in Section 6). The most common mode that the calibrator will be operating in is the **STANDBY** mode. In this mode, the calibrator and all of its subsystems are inactive (no LED lit on front panel display), although **TEST** functions and **WARNING** messages are still updated and can be examined via the front panel display.

The second most important operating mode is **SETUP** mode. This mode is used for performing certain configuration operations, such as programming the concentration of source gases, setting up automatic calibration sequences and configuring the analog/digital inputs and outputs. The **SETUP** mode is also used for accessing various diagnostic tests and functions during troubleshooting.

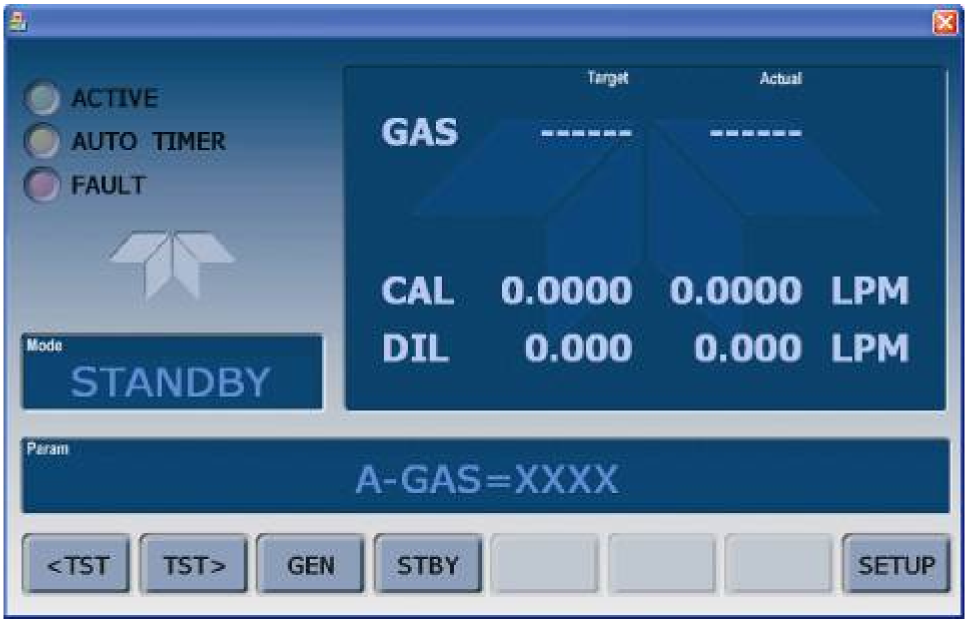

Mode
STANDBY

	Target	Actual	
GAS	-------	------	
CAL	0.0000	0.0000	LPM
DIL	0.000	0.000	LPM

Param
A-GAS=XXXX

Figure 4-1: Front Panel Display

The mode field of the front panel display indicates to the user which operating mode the unit is currently running.

Besides **STANDBY** and **SETUP**, other modes the calibrator can be operated in are listed in Table 4-1:

Table 4-1: Calibrator Operating Modes

MODE	DESCRIPTION	
STANDBY	The calibrator and all of its subsystems are inactive.	
GENERATE	In this mode, the instrument is engaged in producing calibration gas mixtures.	
	MANUAL	In this mode, the instrument is engaged in producing calibration gas mixtures.
	PURGE	The calibrator is using diluent (zero air) to purge its internal pneumatics of all source gas and previously created calibration mixtures.
	GPT[1]	The calibrator is using the O_3 generator and source gas inputs to mix and generate calibration gas using the gas phase titration method.
	GPTPS[2]	Stands for Gas Phase Titration Preset. In this mode the T700 determines the precise performance characteristics of the O_3 generator at the target values for an upcoming GPT calibration.
SETUP[3]	**SETUP** mode is being used to configure the calibrator.	
	DIAG	One of the calibrator's diagnostic modes is being utilized. When the diagnostic functions that have the greatest potential to conflict with generating concentrations are active, the instrument is automatically placed into standby mode.

[1] This mode is not available in units without O_3 generators installed.

[2] This mode is not available in units without internal photometers installed.

[3] The revision of the Teledyne API software installed in this calibrator will be displayed following the word **SETUP**. E.g. "**SETUP G.4**"

4.1. STANDBY MODE

When the T700 Dynamic Dilution Calibrator is in standby mode, it is at rest. All internal valves are closed except the diluent inlet valve. The mass flow controllers are turned off. On units with O_3 generator and photometer options installed, these subsystems are inactive.

- The **SETUP > GAS** submenu is only available when the instrument is in **STANDBY** mode.
- Some functions under the **SETUP > MORE > DIAG** submenu, those which conflict with accurate creation of calibration gas mixtures (e.g. **ANALOG OUTPUT STEP TEST**) automatically place the calibrator into **STANDBY** mode when activated.
- The MFC pressures are not monitored in standby mode since the MFCs are turned OFF. This prevents erroneous **MASS FLOW WARNING** messages from appearing.

Note **The T700 calibrator should always be placed in STANDBY mode when not needed to produce calibration gas. The last step of any calibration sequences should always be the STANDY instruction.**

Table 4-2 shows the status of the T700's various pneumatic components when the calibrator is in **STANDBY** mode.

Table 4-2: Status of Internal Pneumatics During STANDBY Mode

VALVES (X = Closed; O = Open)									MFCs			PHOT PUMP
CYL1	CYL2	CYL3	CYL4	PURGE	DILUENT	GPT	O_3 GEN	PHOT M/R[1]	CAL1	CAL2[1]	DILUENT	
X	X	X	X	X	O	X	X	Reference Phase	OFF	OFF	OFF	OFF

[1] Only present if multiple cal gas MFC option is installed.

In instruments with optional O_3 generators installed, airflow is maintained during **STANDBY** mode so that the generator can continue to operate at its most efficient temperature.

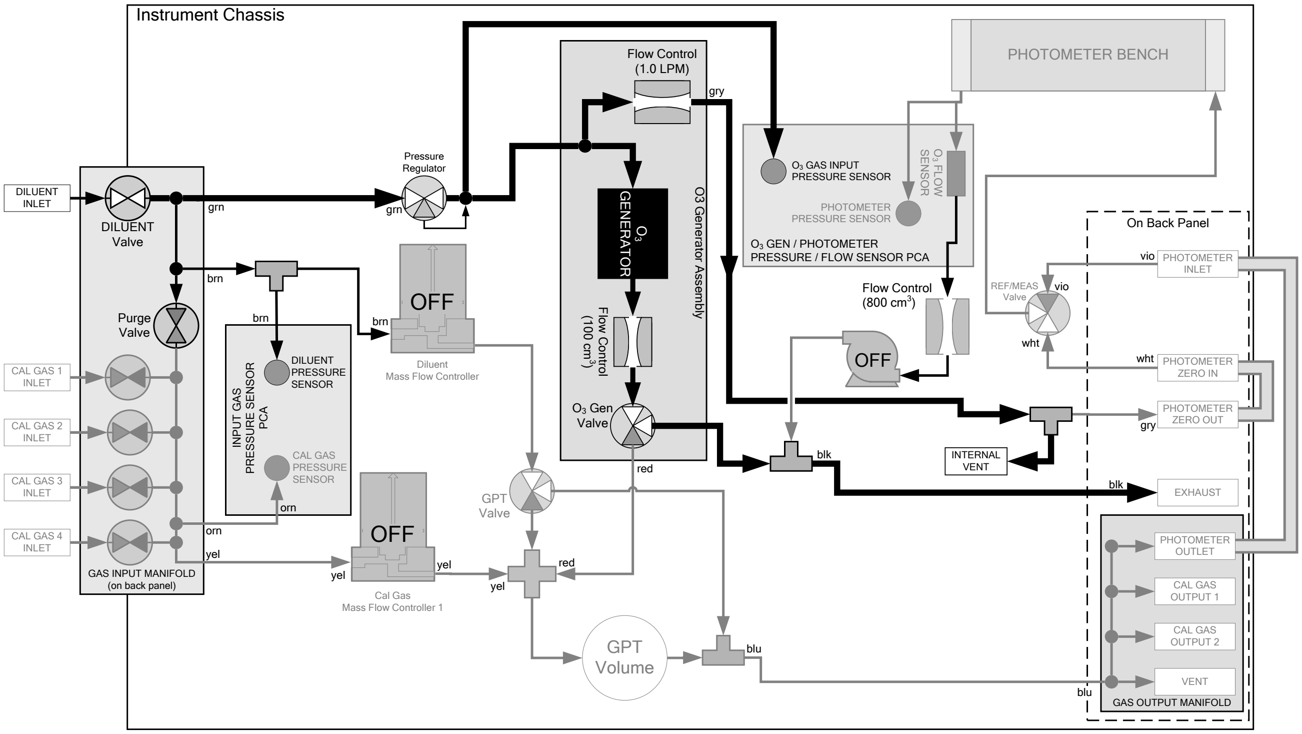
Instrument Chassis
PHOTOMETER BENCH
Flow Control (1.0 LPM)
gry
Pressure Regulator
grn
DILUENT INLET
DILUENT Valve
grn
O_3 GENERATOR
O3 Generator Assembly
Flow Control (100 cm^3)
O_3 Gen Valve
red
O_3 GAS INPUT PRESSURE SENSOR
PHOTOMETER PRESSURE SENSOR
O_3 FLOW SENSOR
O_3 GEN / PHOTOMETER PRESSURE / FLOW SENSOR PCA
Flow Control (800 cm^3)
OFF
REF/MEAS Valve
vio
wht
On Back Panel
vio
PHOTOMETER INLET
wht
PHOTOMETER ZERO IN
PHOTOMETER ZERO OUT
gry
INTERNAL VENT
blk
blk
EXHAUST
brn
Purge Valve
brn
brn
OFF
Diluent Mass Flow Controller
INPUT GAS PRESSURE SENSOR PCA
DILUENT PRESSURE SENSOR
CAL GAS PRESSURE SENSOR
orn
CAL GAS 1 INLET
CAL GAS 2 INLET
CAL GAS 3 INLET
CAL GAS 4 INLET
orn
yel
GAS INPUT MANIFOLD (on back panel)
GPT Valve
OFF
yel
yel
Cal Gas Mass Flow Controller 1
yel
red
GPT Volume
blu
blu
PHOTOMETER OUTLET
CAL GAS OUTPUT 1
CAL GAS OUTPUT 2
VENT
GAS OUTPUT MANIFOLD

Figure 4-2: Gas Flow through T700 with O_3 Generator and Photometer Options during STANDBY

4.1.1. TEST FUNCTIONS

A variety of **TEST** functions are available for viewing at the front panel whenever the calibrator is in STANDBY Mode. These functions provide information about the present operating status of the calibrator and are useful during troubleshooting (see Section 9). Table 4-3 lists the available **TEST** functions.

To view these **TEST** functions, press:

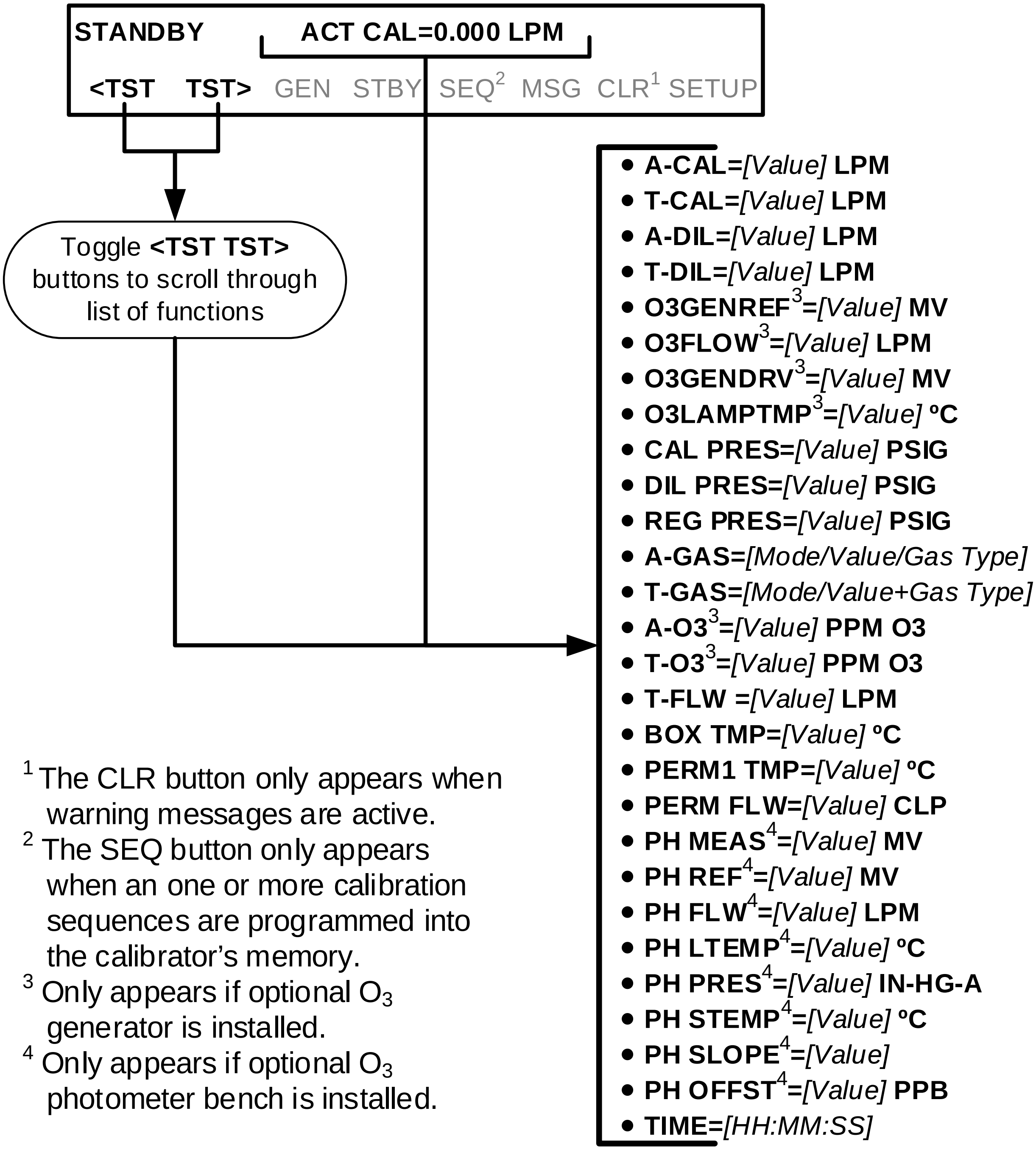
STANDBY
ACT CAL=0.000 LPM
<TST TST> GEN STBY SEQ2 MSG CLR1 SETUP
Toggle <TST TST> buttons to scroll through list of functions
A-CAL=[Value] LPM
T-CAL=[Value] LPM
A-DIL=[Value] LPM
T-DIL=[Value] LPM
O3GENREF3=[Value] MV
O3FLOW3=[Value] LPM
O3GENDRV3=[Value] MV
O3LAMPTMP3=[Value] ºC
CAL PRES=[Value] PSIG
DIL PRES=[Value] PSIG
REG PRES=[Value] PSIG
A-GAS=[Mode/Value/Gas Type]
T-GAS=[Mode/Value+Gas Type]
A-O33=[Value] PPM O3
T-O33=[Value] PPM O3
T-FLW =[Value] LPM
BOX TMP=[Value] ºC
PERM1 TMP=[Value] ºC
PERM FLW=[Value] CLP
PH MEAS4=[Value] MV
PH REF4=[Value] MV
PH FLW4=[Value] LPM
PH LTEMP4=[Value] ºC
PH PRES4=[Value] IN-HG-A
PH STEMP4=[Value] ºC
PH SLOPE4=[Value]
PH OFFST4=[Value] PPB
TIME=[HH:MM:SS]

[1] The CLR button only appears when warning messages are active.

[2] The SEQ button only appears when an one or more calibration sequences are programmed into the calibrator's memory.

[3] Only appears if optional O_3 generator is installed.

[4] Only appears if optional O_3 photometer bench is installed.

Figure 4-3: Viewing T700 Test Functions

Table 4-3: Test Functions Defined

DISPLAY	UNITS	DESCRIPTION
A-CAL	LPM	The actual gas flow rate of source gas being output by the calibrator.
T-CAL	LPM	Target source gas flow rate for which the calibrator output is set.
A-DIL	LPM	The actual gas flow rate of diluent (zero) gas being output by the calibrator.
T-DIL	LPM	Target diluent (zero) gas flow rate for which the calibrator output is set.
O3FLOW[1]	LPM	The gas flow rate for which the O_3 generator is set.
O3GENDRV[1]	mV	The drive voltage of the O_3 generator UV lamp.
O3LAMPTMP[1]	°C	O_3 generator UV lamp temperature.
CAL PRES	PSIG	The gas pressure of the source gas being supplied to the calibrator.
DIL PRES	PSIG	The gas pressure of the Diluent gas being supplied to the calibrator Diluent pressure.
REG PRES[2]	PSIG	The gas pressure at the pressure regulator on the O_3 generator supply line.
A-GAS		Actual concentration, and in some modes the actual flow rate, of the source gas in the calibration mixture being generated is displayed.
T-GAS		The Target concentration, and in some modes the target flow rate, of the source gas in the calibration mixture being generated is displayed.
BOX TMP	°C	Internal chassis temperature.
PH MEAS[2]	mV	The average UV Detector output during the SAMPLE PORTION of the optional photometer’s measurement cycle.
PH REF[2]	mV	The average UV Detector output during the REFERENCE portion of the optional photometer’s measurement cycle.
PH FLW[2]	LPM	The gas flow rate as measured by the flow sensor located between the optical bench and the internal pump.
PH LTEMP[2]	°C	The temperature of the UV lamp in the photometer bench.
PH PRES[2]	In-hg-A	The pressure of the gas inside the photometer’s sample chamber as measured by a solid-state pressure sensor located downstream of the photometer.
PH STEMP[2]	°C	The temperature of the gas inside the sample chamber of the photometer.
PH SLOPE[2]	1.000	Photometer slope computed when the photometer was calibrated at the factory.
PH OFFST[2]	ppb	Photometer offset computed when the photometer was calibrated at the factory.
TEST[3]	mV	Displays the analog signal level of the **TEST** analog output channel.
TIME	HH:MM:SS	Current time as determined by the calibrator’s internal clock.

[1] Only appears when the optional O_3 generator is installed.

[2] Only appears when the optional O_3 photometer is installed.

[3] Only appears when the **TEST** channel has been activated.

4.2. GENERATE MODE

The Generate Mode allows the user to generate the desired calibration gas mixtures. The types of gas include NO, NO_2, SO_2, CO, HC or ZERO gas based on the source gas concentration entered during initial setup (see Section 3.4.7). If the unit has an optional O_3 generator installed, various concentrations of O_3 can be generated as well.

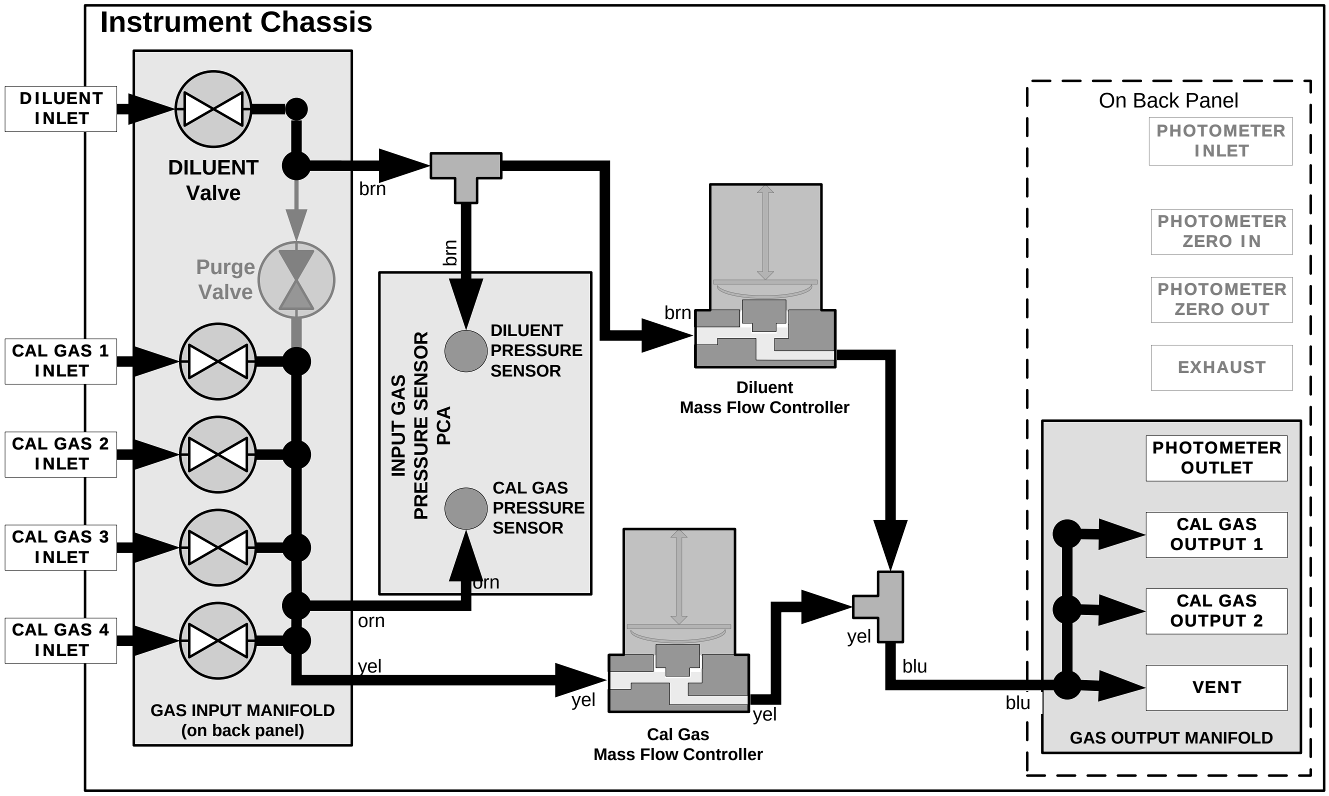
Instrument Chassis
DILUENT INLET
DILUENT Valve
Purge Valve
CAL GAS 1 INLET
CAL GAS 2 INLET
CAL GAS 3 INLET
CAL GAS 4 INLET
GAS INPUT MANIFOLD (on back panel)
brn
brn
INPUT GAS PRESSURE SENSOR PCA
DILUENT PRESSURE SENSOR
CAL GAS PRESSURE SENSOR
orn
orn
yel
yel
brn
Diluent Mass Flow Controller
Cal Gas Mass Flow Controller
yel
yel
blu
blu
On Back Panel
PHOTOMETER INLET
PHOTOMETER ZERO IN
PHOTOMETER ZERO OUT
EXHAUST
PHOTOMETER OUTLET
CAL GAS OUTPUT 1
CAL GAS OUTPUT 2
VENT
GAS OUTPUT MANIFOLD

Figure 4-4: Gas Flow through Basic T700 in GENERATE Mode

Table 4-4 shows the status of the T700's various pneumatic components when the calibrator is in **GENERATE** mode:

Table 4-4: Status of Internal Pneumatics During GENERATE Mode

GAS TYPE	VALVES (X = Closed; O = Open)									MFCs			PHOT PUMP
	CYL 1	CYL 2	CYL 3	CYL 4	PURGE	DILUENT	GPT	O_3 GEN	PHOT M/R	CAL1	CAL2[1]	DILUENT	
Generate Source Gas	**O**[2]	**O**[2]	**O**[2]	**O**[2]	**X**	**O**	**X**	**X**	Reference Phase	**ON**[3]	**ON**[3]	**ON**	**OFF**
Generate O_3	**X**	**X**	**X**	**X**	**X**	**O**	**X**	**O**	Switching	**OFF**	**OFF**	**OFF**	**ON**

[1] Only present if multiple cal gas MFC option is installed.

[2] The valve associated with the cylinder containing the chosen source gas is open.

[3] In instrument with multiple MFCs the CPU chooses which MFC to use depending on the target gas flow requested.

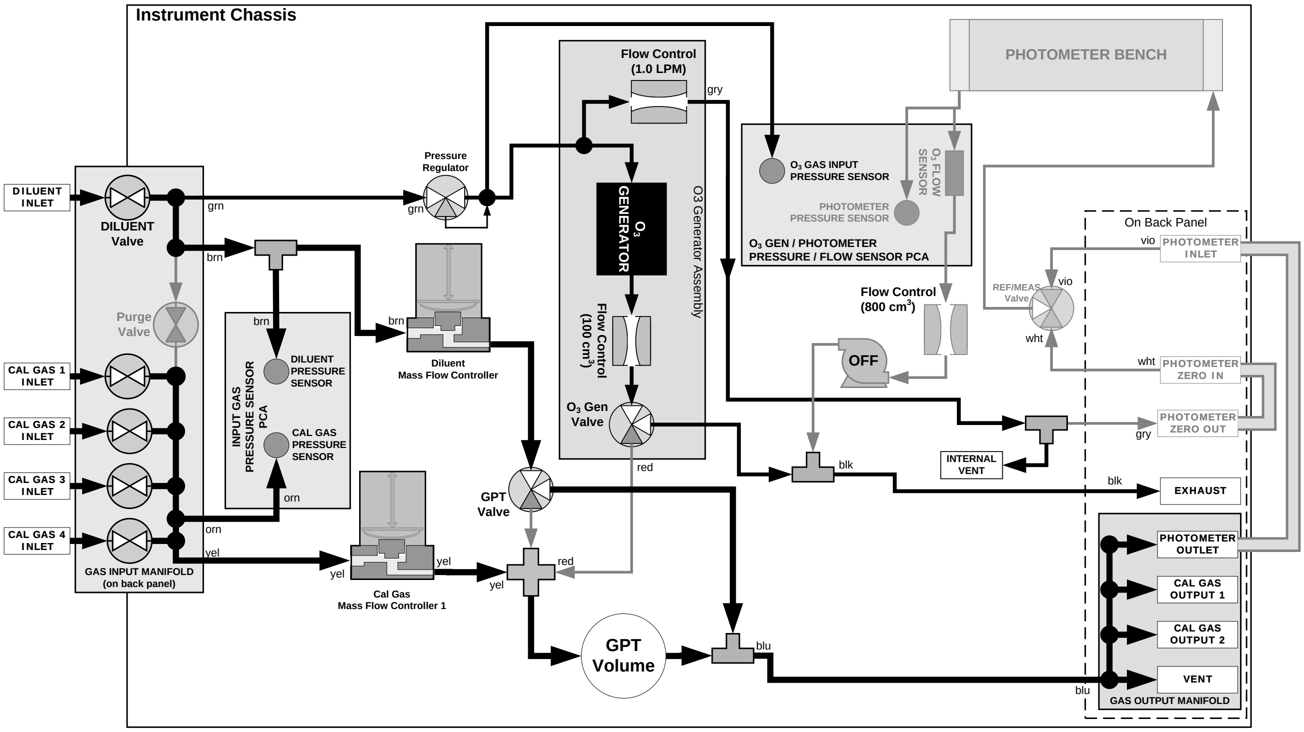
Instrument Chassis
PHOTOMETER BENCH
Flow Control (1.0 LPM)
gry
O_3 GAS INPUT PRESSURE SENSOR
O_3 FLOW SENSOR
PHOTOMETER PRESSURE SENSOR
O_3 GEN / PHOTOMETER PRESSURE / FLOW SENSOR PCA
On Back Panel
vio
PHOTOMETER INLET
REF/MEAS Valve
vio
wht
Flow Control (800 cm^3)
OFF
wht
PHOTOMETER ZERO IN
PHOTOMETER ZERO OUT
gry
INTERNAL VENT
blk
blk
EXHAUST
PHOTOMETER OUTLET
CAL GAS OUTPUT 1
CAL GAS OUTPUT 2
VENT
blu
GAS OUTPUT MANIFOLD
Pressure Regulator
grn
grn
O_3 GENERATOR
O3 Generator Assembly
Flow Control (100 cm^3)
O_3 Gen Valve
red
red
GPT Valve
GPT Volume
blu
DILUENT INLET
DILUENT Valve
brn
brn
brn
Purge Valve
CAL GAS 1 INLET
CAL GAS 2 INLET
CAL GAS 3 INLET
CAL GAS 4 INLET
GAS INPUT MANIFOLD (on back panel)
INPUT GAS PRESSURE SENSOR PCA
DILUENT PRESSURE SENSOR
CAL GAS PRESSURE SENSOR
orn
orn
yel
yel
yel
yel
Diluent Mass Flow Controller
Cal Gas Mass Flow Controller 1

Figure 4-5: Gas Flow through T700 with O_3 Options when Generating Non-O_3 Source Gas

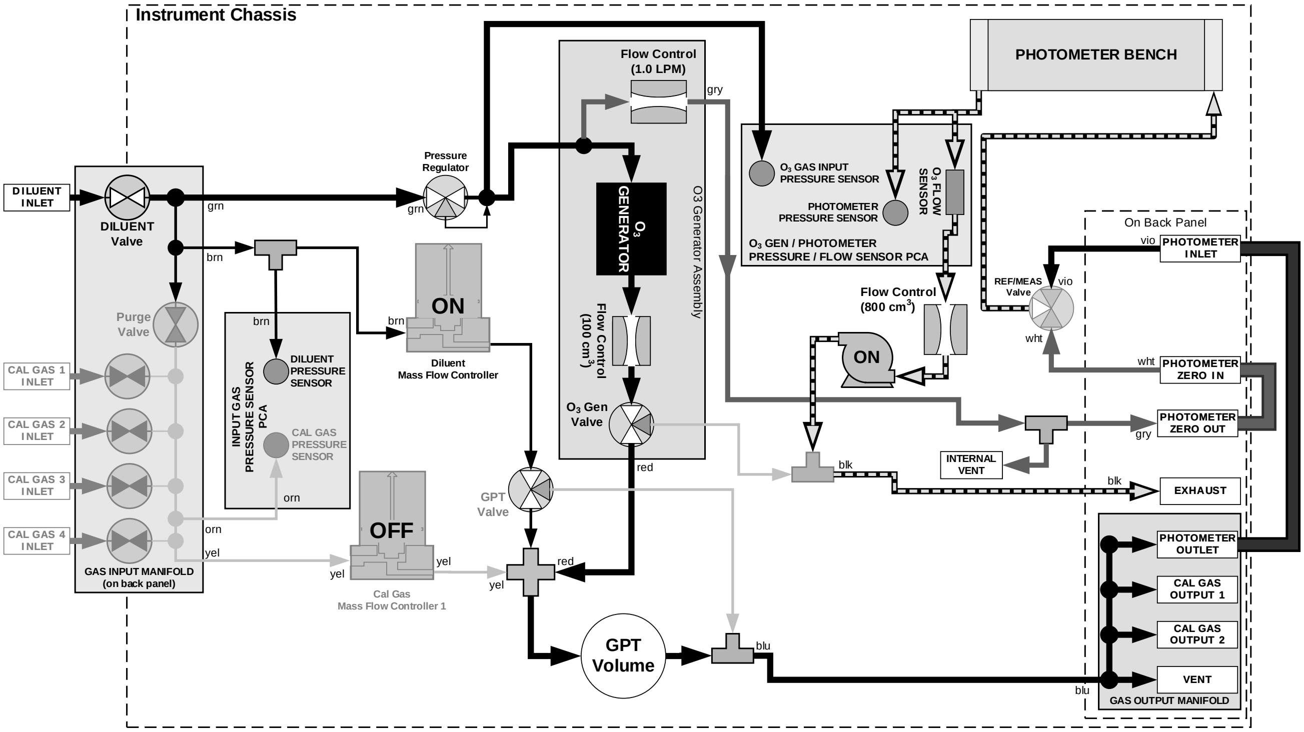
Instrument Chassis
PHOTOMETER BENCH
Flow Control (1.0 LPM)
gry
O_3 GAS INPUT PRESSURE SENSOR
O_3 FLOW SENSOR
PHOTOMETER PRESSURE SENSOR
O_3 GEN / PHOTOMETER PRESSURE / FLOW SENSOR PCA
On Back Panel
vio
PHOTOMETER INLET
REF/MEAS Valve
vio
wht
Flow Control (800 cm^3)
ON
wht
PHOTOMETER ZERO IN
PHOTOMETER ZERO OUT
gry
INTERNAL VENT
blk
blk
EXHAUST
PHOTOMETER OUTLET
CAL GAS OUTPUT 1
CAL GAS OUTPUT 2
VENT
blu
GAS OUTPUT MANIFOLD
Pressure Regulator
grn
grn
ON
O_3 GENERATOR
O3 Generator Assembly
Flow Control (100 cm^3)
O_3 Gen Valve
red
red
GPT Valve
GPT Volume
blu
DILUENT INLET
DILUENT Valve
brn
brn
brn
Purge Valve
CAL GAS 1 INLET
CAL GAS 2 INLET
CAL GAS 3 INLET
CAL GAS 4 INLET
GAS INPUT MANIFOLD (on back panel)
INPUT GAS PRESSURE SENSOR PCA
DILUENT PRESSURE SENSOR
CAL GAS PRESSURE SENSOR
orn
orn
yel
yel
yel
yel
OFF
Diluent Mass Flow Controller
Cal Gas Mass Flow Controller 1

Figure 4-6: Gas Flow through T700 with O_3 Options when Generating O_3

4.2.1. GENERATE > AUTO: BASIC GENERATION OF CALIBRATION MIXTURES

This is the simplest procedure for generating calibration gas mixtures. In this mode, the user makes three choices:

- The type of component gas to be used from the list of gases input during initial set up (see Section 3.4.7);
- The target concentration, and;
- The **TOTAL FLOW** to be output by the T700.

Using this information, the T700 calibrator automatically calculates and sets the individual flow rates for the Diluent and chosen component gases to create the desired calibration mixture.

Note **This menu, which shows the SEQ (sequence) button, differs from the GENERATE>AUTO menu for cylinders of multiple gases (Section 4.2.6).**

To use the **GENERATE** > **AUTO** feature, press:

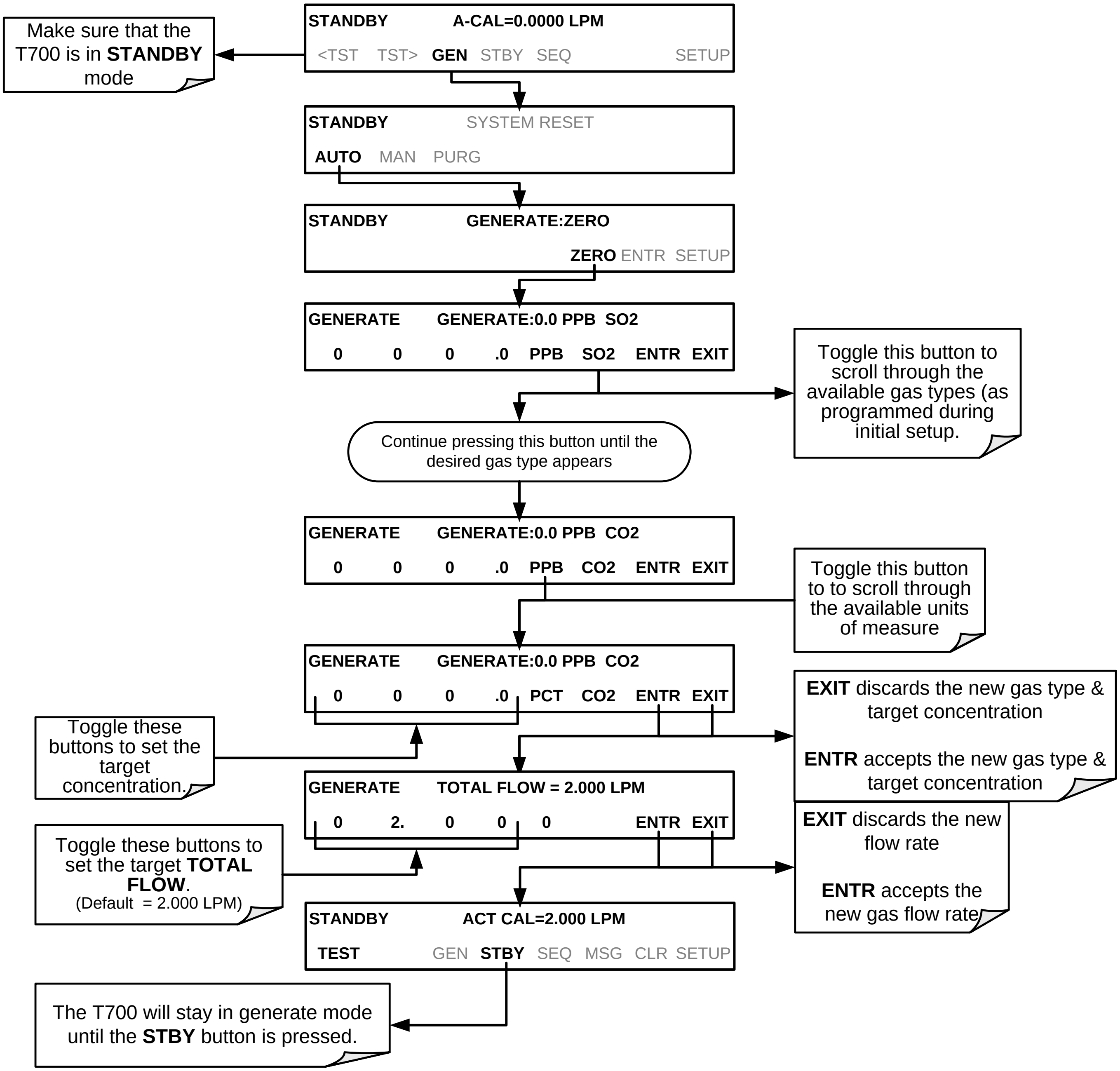
STANDBY A-CAL=0.0000 LPM
<TST TST> GEN STBY SEQ SETUP
STANDBY SYSTEM RESET
AUTO MAN PURG
STANDBY GENERATE:ZERO
ZERO ENTR SETUP
GENERATE GENERATE:0.0 PPB SO2
0 0 0 .0 PPB SO2 ENTR EXIT
GENERATE GENERATE:0.0 PPB CO2
0 0 0 .0 PPB CO2 ENTR EXIT
GENERATE GENERATE:0.0 PPB CO2
0 0 0 .0 PCT CO2 ENTR EXIT
GENERATE TOTAL FLOW = 2.000 LPM
0 2. 0 0 0 ENTR EXIT
STANDBY ACT CAL=2.000 LPM
TEST GEN STBY SEQ MSG CLR SETUP

Make sure that the T700 is in **STANDBY** mode

Toggle this button to scroll through the available gas types (as programmed during initial setup.

Continue pressing this button until the desired gas type appears

Toggle this button to to scroll through the available units of measure

Toggle these buttons to set the target concentration.

EXIT discards the new gas type & target concentration

ENTR accepts the new gas type & target concentration

Toggle these buttons to set the target **TOTAL FLOW**.
(Default = 2.000 LPM)

EXIT discards the new flow rate

ENTR accepts the new gas flow rate

The T700 will stay in generate mode until the **STBY** button is pressed.

4.2.2. GENERATE > MAN: GENERATING CALIBRATION MIXTURES MANUALLY

This mode provides complete the user with more complete control of the gas mixture process. Unlike the **AUTO** mode, **MAN** mode requires the user set the both the component gas flow rate and diluent airflow rate. This allows the user control over the mixing ratio and total calibration gas flow rate.

In addition, if the T700 calibrator is equipped with the optional O_3 generator and O_3 is to be included in the calibration mixture (e.g. using the GPT or GPTPS features), the user also needs to set the ozone generator mode and set point.

The **TOTAL FLOW** is defined by the user depending on system requirements.

Note

- **The minimum total flow should equal 150% of the flow requirements of all of the instruments to which the T700 will be supplying calibration gas.**
- **Example: If the T700 is will be expected to supply calibration gas mixtures simultaneously to a system in composed of three analyzers each requiring 2 LPM , the proper Total Flow output should be set at:**

(2 + 2 + 2) x 1.5 = 9.000 LPM

4.2.2.1. Determining the Source Gas Flow Rate

To determine the required flow rate of the component source gas use the following formula

Equation 4-1

$$GAS_{flow} = \frac{C_f \times Totalflow}{C_i}$$

WHERE:

C_f = target concentration of diluted gas
C_i = concentration of the source gas
GAS_{flow} = source gas flow rate

EXAMPLE:

- A target concentration of 200 ppm of SO_2 is needed.
- The Concentration of the SO_2 Source is 600 ppm
- The requirement of the system are 9.000 LPM
- The required source gas flow rate would be:

GAS_{flow} = (200 ppm x 9.000 LPM) ÷ 600 ppm
GAS_{flow} = 1800.000 ppm/LPM) ÷ 600 ppm
GAS_{flow} = 3.000 LPM

4.2.2.2. **Determining the Diluent Gas Flow Rate**

To determine the required flow rate of the diluent gas use the following formula:

Equation 4-2

$$DIL_{flow} = Totalflow - GAS_{flow}$$

WHERE:

GAS_{flow} = source gas flow rate (from Equation 6-1)
Totalflow = total gas flow requirements of the system
DIL_{flow} = required diluent gas flow

EXAMPLE:

- If the requirement of the system is 9.000 LPM,
- The source gas flow rate is set at 3.00 LPM.
- The required source gas flow rate would be:

DIL_{flow} = 9.0 LPM – 3.0 LPM
DIL_{flow} = 6.0 LPM

4.2.2.3. **Determining the Diluent Gas Flow Rate with the Optional O_3 Generator Installed**

If the optional O_3 generator is installed and in use, Equation 6.2 will be slightly different, since the O_{3flow} is a constant value and is displayed as a **TEST** function on the T700's front panel. A typical value for O_{3flow} is 105 cm^3/min.

Equation 4-3

$$DIL_{flow} = Totalflow - O_{3flow}$$

WHERE:

GAS_{flow} = source gas flow rate (from Equation 6-1)
Totalflow = total gas flow requirements of the system.
$O_{3\ flow}$ = the flow rate set for the O_3 generator; a constant value (typically about 0.105 LPM)
DIL_{flow} = required diluent gas flow

EXAMPLE:

- If the requirement of the system are 9.000 LPM,
- The source gas flow rate is set at 3.00 LPM.
- The required source gas flow rate would be:

DIL_{flow} = 9.0 LPM – 0.105 LPM
DIL_{flow} = 8.895 LPM

Note

It is not recommended to set any flow rate to <10% or >100% of the full scale rating of that associated mass flow controller.

WITH MULTIPLE CALIBRATIONS MASS FLOW CONTROLLERS INSTALLED:

- **The combined flow potential of both mass flow controllers is available with the following limits: The limits are <10% of the lowest rated MFC or >100% of the combined full-scale ratings for both mass flow controllers.**
- **The T700 will automatically select the MFC with the lowest flow rate that can accommodate the requested flow, thereby affording the most precise flow control.**
- **If no single MFC can accommodate the requested flow rate, multiple mass flow controllers are used.**

4.2.2.4. **Setting Source Gas and Diluent Flow Rates Using the GENERATE > MAN Menu**

In the following demonstration we will be using the values from the examples given with Equations 6-1 and 6-2 above and assume a T700 calibrator with at least one source gas mass flow controller capable of 3.0 LPM output.

Using the example from Equations 6-1 and 6-2 above, press:

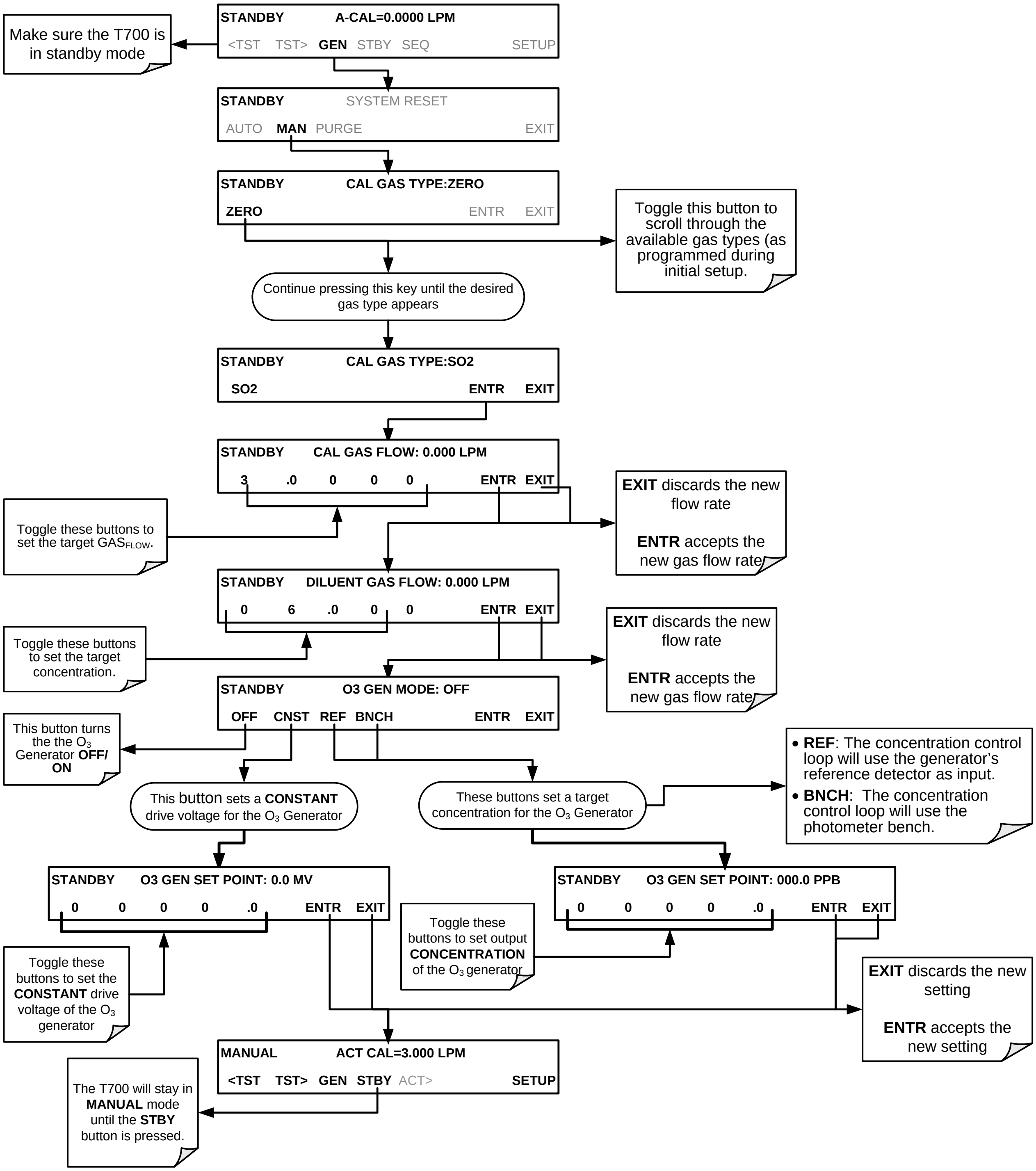
STANDBY A-CAL=0.0000 LPM
<TST TST> GEN STBY SEQ SETUP
STANDBY SYSTEM RESET
AUTO MAN PURGE EXIT
STANDBY CAL GAS TYPE:ZERO
ZERO ENTR EXIT
STANDBY CAL GAS TYPE:SO2
SO2 ENTR EXIT
STANDBY CAL GAS FLOW: 0.000 LPM
3 .0 0 0 0 ENTR EXIT
STANDBY DILUENT GAS FLOW: 0.000 LPM
0 6 .0 0 0 ENTR EXIT
STANDBY O3 GEN MODE: OFF
OFF CNST REF BNCH ENTR EXIT
STANDBY O3 GEN SET POINT: 0.0 MV
0 0 0 0 .0 ENTR EXIT
STANDBY O3 GEN SET POINT: 000.0 PPB
0 0 0 0 .0 ENTR EXIT
MANUAL ACT CAL=3.000 LPM
<TST TST> GEN STBY ACT> SETUP

Make sure the T700 is in standby mode

Toggle this button to scroll through the available gas types (as programmed during initial setup.

Continue pressing this key until the desired gas type appears

Toggle these buttons to set the target GAS_{FLOW}.

EXIT discards the new flow rate

ENTR accepts the new gas flow rate

Toggle these buttons to set the target concentration.

EXIT discards the new flow rate

ENTR accepts the new gas flow rate

This button turns the the O_3 Generator **OFF/ ON**

This button sets a **CONSTANT** drive voltage for the O_3 Generator

These buttons set a target concentration for the O_3 Generator

- **REF**: The concentration control loop will use the generator's reference detector as input.
- **BNCH**: The concentration control loop will use the photometer bench.

Toggle these buttons to set the **CONSTANT** drive voltage of the O_3 generator

Toggle these buttons to set output **CONCENTRATION** of the O_3 generator

EXIT discards the new setting

ENTR accepts the new setting

The T700 will stay in **MANUAL** mode until the **STBY** button is pressed.

4.2.3. GENERATE > GPT: PERFORMING A GAS PHASE TITRATION CALIBRATION

4.2.3.1. GPT Theory

The principle of GPT is based on the rapid gas phase reaction between NO and O_3, which produces quantities of NO_2 as shown by the following equation:

Equation 4-4

$$NO + O_3 \longrightarrow NO_2 + O_2 + h\nu_{(light)}$$

It has been empirically determined that under controlled circumstances the NO-O_3 reaction is very efficient (<1% residual O_3), therefore the concentration of NO_2 resulting from the mixing of NO and O_3 can be precisely predicted and controlled as long as the following conditions are met:

- The amount of O_3 used in the mixture is known.
- The amount of NO used in the mixture is **AT LEAST** 10% greater than the amount O_3 in the mixture.
- The volume of the mixing chamber is known.
- The NO and O_3 flow rates (from which the time the two gases are in the mixing chamber) are low enough to give a residence time of the reactants in the mixing chamber of >2.75 ppm min.

Given the above conditions, the amount of NO_2 being output by the T700 will be equal to (at a 1:1 ratio) to the amount of O_3 added.

Since the O_3 flow rate of the T700’s O_3 generator is a set fixed value (typically about 0.105 LPM) and the GPT chamber’s volume is known, once the **TOTAL GAS FLOW** requirements, the source concentration of NO, and the target concentration for the O_3 generator are entered into the calibrator’s software. The T700 adjusts the NO flow rate and diluent (zero air) flow rate to create the appropriate NO_2 concentration at the output.

4.2.3.2. Choosing an Input Concentration for the NO

It is important to ensure that there is enough NO in the GPT chamber to use up all of the O_3. Excess O_3 will react with the resulting NO_2 to produce NO_3. Since NO_3 is undetectable by most NO_x analyzers, this will result in false low readings.

The EPA requires that the NO content of a GPT mixture be at least 10% higher than the O_3 content. Since there is no negative effect to having too much NO in the GPT chamber, Teledyne API recommends that the NO concentration be chosen to be some value higher (as much as twice as high) as the highest intended target NO_2 value and kept constant.

As long as the flow rate is also kept constant three of the four conditions listed in Section 4.2.3.1 above are therefore constant and the NO_2 output can be easily and reliably varied by simply changing the O_3 concentration.

EXAMPLE:

- Calibration values of NO_2 from 200 ppb to 450 ppb will be needed.
- The NO gas input concentration should be no lower than 495 ppb and can be as high as 900 ppb.

4.2.3.3. Determining the TOTAL FLOW for GPT Calibration Mixtures

The total flow rate is defined by the user depending on system requirements.

The minimum total flow should equal 150% of the flow requirements of all of the instruments to which the T700 will be supplying calibration gas.

EXAMPLE:

- If the T700 is will be expected to supply calibration gas mixtures simultaneously to a system in composed of three analyzers each requiring 2 LPM, the proper Total Flow output should be set at:
- (2 + 2 + 2) x 1.5 = 9.000 LPM

Note

It is not recommended to set any flow rate to <10% or >100% of the full scale rating of that associated mass flow controller.

WITH MULTIPLE CALIBRATIONS MASS FLOW CONTROLLERS INSTALLED:

- **The full combined flow potential of both mass flow controllers is available to use with the following limits: The limits are <10% of the lowest rated MFC or >100% of the combined full-scale ratings for both mass flow controllers.**
- **The T700 will automatically select the MFC with the lowest flow rate that can accommodate the requested flow, thereby affording the most precise flow control.**
- **If no single MFC can accommodate the requested flow rate, multiple mass flow controllers are used.**

Given this information, the T700 calibrator determines the NO gas flow by the formula:

Equation 4-5

$$NO\ GAS_{flow} = \frac{C_{NO_2} \times Totalflow}{C_{NO}}$$

WHERE:

C_{NO2} = target concentration for the NO_2 output

C_{NO} = concentration of the NO gas input

$NO\ GAS_{flow}$ = NO source gas flow rate

And the diluent (zero air) gas flow by the formula:

Equation 4-6

$$DIL_{flow} = Totalflow - NO\ GAS_{flow} - O_{3\,flow}$$

WHERE:

GAS_{flow} = source gas flow rate (from Equation 6-1)

Totalflow = total gas flow requirements of the system.

$O_{3\ flow}$ = the flow rate set for the O_3 generator; a constant value (typically about 0.105 LPM)

DIL_{flow} = required diluent gas flow

4.2.3.4. T700 Calibrator GPT Operation

The following table and figures show the status of the T700's internal pneumatic components and internal gas flow when the instrument is in **GPT** generating modes.

Table 4-5: Status of Internal Pneumatics During GENERATE > GPT Mode

MODE	VALVES (X = Closed; O = Open)									MFCs			PHOT PUMP
	CYL 1	CYL 2	CYL 3	CYL 4	PURGE	DILUENT	GPT	O_3 GEN	PHOT M/R	CAL1	CAL2[1]	DILUENT	
GPT	O[2]	O[2]	O[2]	O[2]	X	O	O	O	Reference Phase	ON[3]	ON[3]	ON	OFF

[1] Only present if multiple cal gas MFC option is installed.

[2] The valve associated with the cylinder containing NO source gas is open.

[3] In instrument with multiple MFCs the CPU chooses which MFC to use depending on the target gas flow requested.

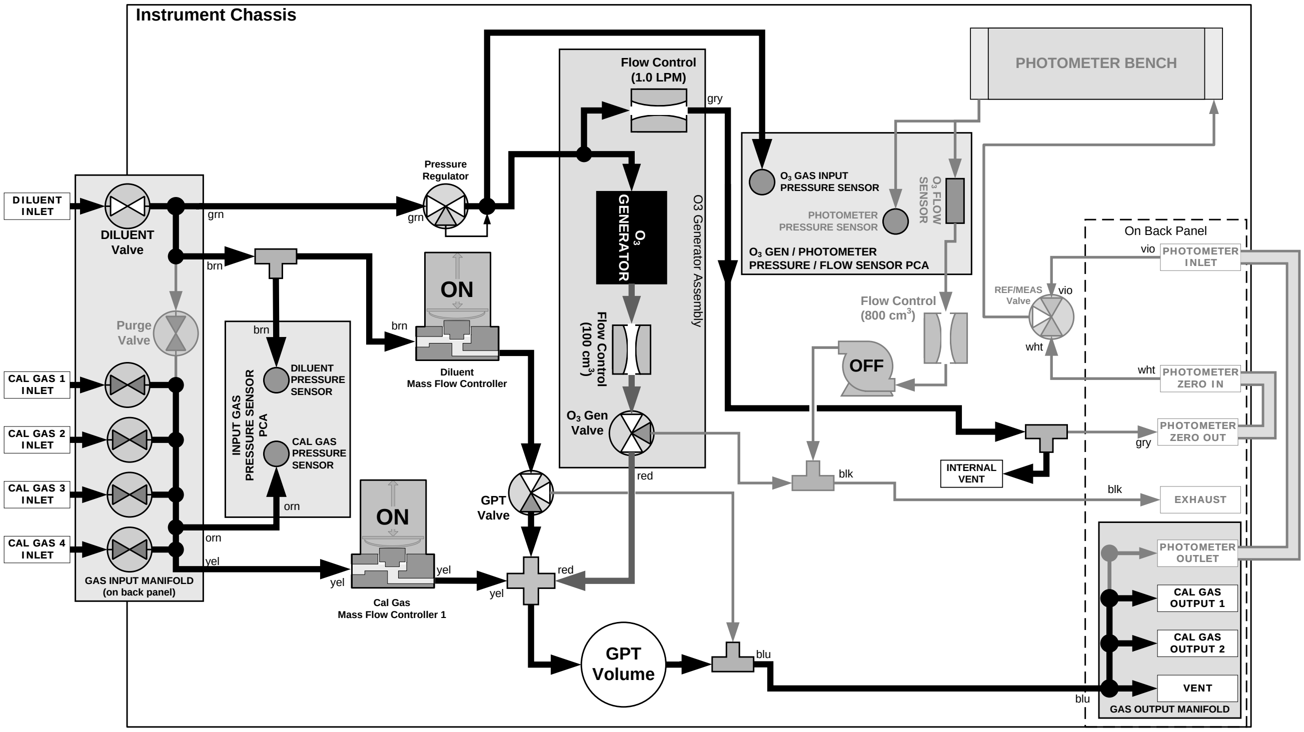
Instrument Chassis
DILUENT INLET
DILUENT Valve
Purge Valve
CAL GAS 1 INLET
CAL GAS 2 INLET
CAL GAS 3 INLET
CAL GAS 4 INLET
GAS INPUT MANIFOLD (on back panel)
grn
brn
orn
yel
INPUT GAS PRESSURE SENSOR PCA
DILUENT PRESSURE SENSOR
CAL GAS PRESSURE SENSOR
Pressure Regulator
ON
Diluent Mass Flow Controller
Cal Gas Mass Flow Controller 1
Flow Control (1.0 LPM)
gry
O3 GENERATOR
O3 Generator Assembly
Flow Control (100 cm3)
O3 Gen Valve
red
GPT Valve
GPT Volume
blu
PHOTOMETER BENCH
O3 GAS INPUT PRESSURE SENSOR
PHOTOMETER PRESSURE SENSOR
O3 FLOW SENSOR
O3 GEN / PHOTOMETER PRESSURE / FLOW SENSOR PCA
Flow Control (800 cm3)
OFF
REF/MEAS Valve
vio
wht
blk
INTERNAL VENT
On Back Panel
PHOTOMETER INLET
PHOTOMETER ZERO IN
PHOTOMETER ZERO OUT
EXHAUST
PHOTOMETER OUTLET
CAL GAS OUTPUT 1
CAL GAS OUTPUT 2
VENT
GAS OUTPUT MANIFOLD

Figure 4-7: Gas Flow through T700 with O_3 Options when in GPT Mode

4.2.3.5. Initiating a GPT Calibration Gas Generation

Note **It is highly recommended to perform a GPT Pre-Set before initiating any GPT gas generation (Section 4.2.4).**

To initiate GPT gas generation you will need to know:

- The **TOTAL GAS FLOW** for the mixture output;
- The Target O_3 concentration (equal to the target NO_2 concentration to be generated), and;
- The NO source gas concentration.

Then, press:

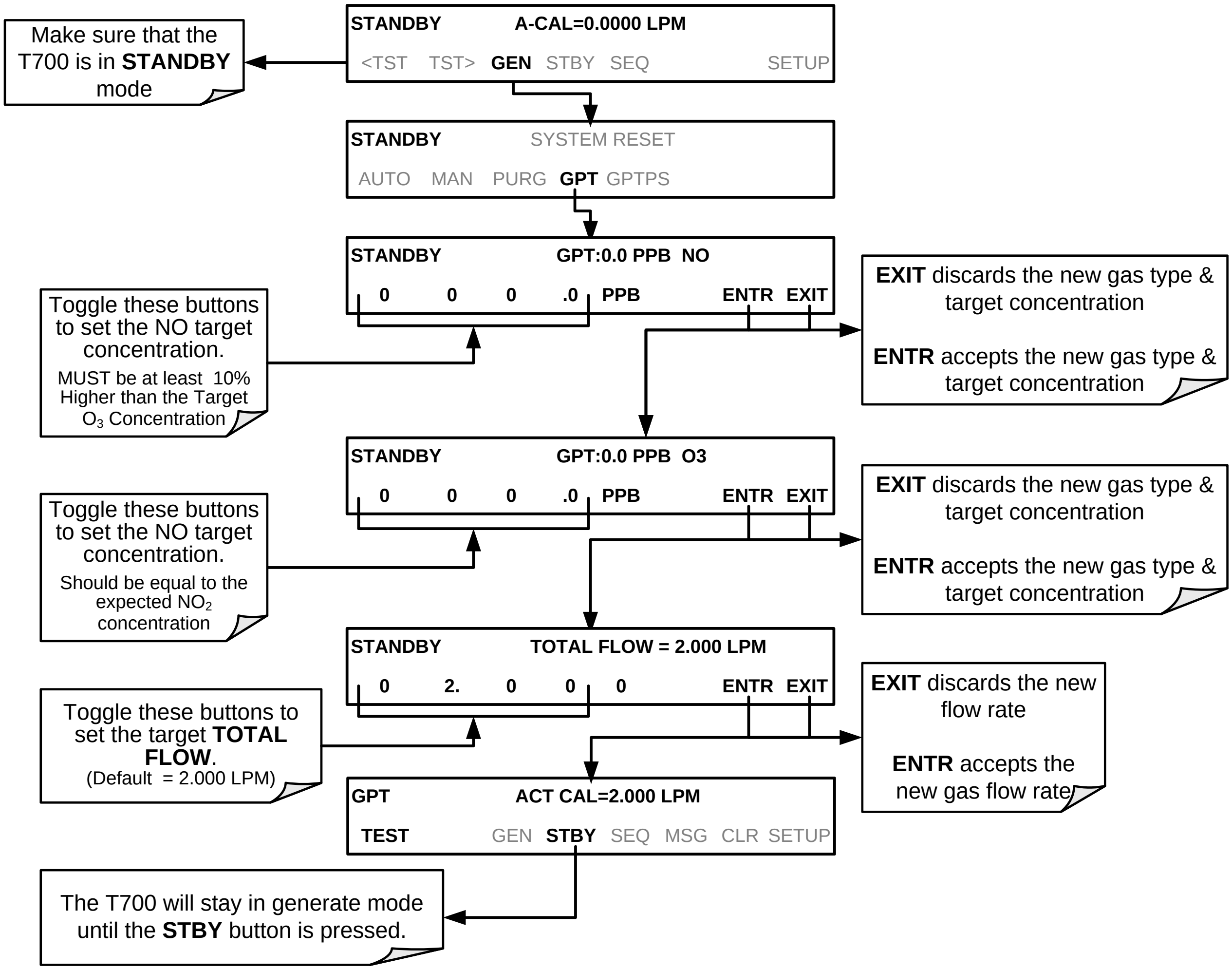
Make sure that the T700 is in STANDBY mode
STANDBY A-CAL=0.0000 LPM
<TST TST> GEN STBY SEQ SETUP
STANDBY SYSTEM RESET
AUTO MAN PURG GPT GPTPS
STANDBY GPT:0.0 PPB NO
0 0 0 .0 PPB ENTR EXIT
Toggle these buttons to set the NO target concentration.
MUST be at least 10% Higher than the Target O3 Concentration
EXIT discards the new gas type & target concentration
ENTR accepts the new gas type & target concentration
STANDBY GPT:0.0 PPB O3
0 0 0 .0 PPB ENTR EXIT
Toggle these buttons to set the NO target concentration.
Should be equal to the expected NO2 concentration
EXIT discards the new gas type & target concentration
ENTR accepts the new gas type & target concentration
STANDBY TOTAL FLOW = 2.000 LPM
0 2. 0 0 0 ENTR EXIT
Toggle these buttons to set the target TOTAL FLOW.
(Default = 2.000 LPM)
EXIT discards the new flow rate
ENTR accepts the new gas flow rate
GPT ACT CAL=2.000 LPM
TEST GEN STBY SEQ MSG CLR SETUP
The T700 will stay in generate mode until the STBY button is pressed.

4.2.4. GENERATE > GPTPS: PERFORMING A GAS PHASE TITRATION PRE-SET

The GPT Pre-Set feature simulates a **GPT** mixing operation in order to determine the exact output of the calibrators O_3 generator. As described in Section 4.2.3.1, all other things being equal, the concentration of the NO_2 being generated using the GPT feature will be equal to the amount of O_3 used. Therefore, the more accurately the O_3 generator performs the more accurate the NO_2 output will be.

When operating in **GPTPS** mode diluent gas (zero air) is substituted for the NO gas that would be mixed with the O_3 in normal GPT mode. The resulting unaffected O_3 output of the O_3 generator is shunted through the T700's internal photometer, which measures the ACTUAL O_3 concentration in the gas.

Once the exact O_3 concentration being output by the generator is determined, the calibrator's software adjusts the O_3 drive voltage up or down so that the output of the generator matches as closely as possible, the target concentration requested. This adjusted generator setting will be used during any subsequent real GPT operation.

Note **The T700 has a learning algorithm during the O_3 generation (see Section 4.2) or Gas Phase Titration Pre-Set Mode (GPTPS) (Sections 4.2.3.5 and 4.2.4). It may take up to one hour for each new concentration/flow (point) that is entered into the instrument. Once the instrument has several points memorized in its cache, any new point that is entered will automatically be estimated within ±1% error (with photometer) and ±10% error (with O_3 generator and GPTPS).**

Note **This adjustment is only valid for the O_3 concentration used during the Pre-Set operation. GPT Presets must be re-run for each different target NO_2 value.**

In order to keep the resulting concentration of O_3 consistent with the GPT mixture being simulated, the instrument's software adjust the flow rate of the diluent gas to substitutes an amount of diluent gas equal to the amount of NO gas that would normally be used.

4.2.4.1. T700 Calibrator GPTPS Operation

The following table and figures show the status of the T700's internal pneumatic components and internal gas flow when the instrument is in **GPTPS** generating modes.

Table 4-6: Status of Internal Pneumatics During GENERATE > GPTPS Mode

MODE	VALVES (X = Closed; O = Open)									MFCs			PHOT PUMP
	CYL 1	CYL 2	CYL 3	CYL 4	PURGE	DILUENT	GPT	O_3 GEN	PHOT M/R	CAL1	CAL2[1]	DILUENT	
GPTPS	X	X	X	X	X	O	O	O	Switching	OFF	OFF	ON	ON

[1] Only present if multiple cal gas MFC option is installed.

[2] The valve associated with the cylinder containing NO source gas is open.

[3] In instrument with multiple MFCs the CPU chooses which MFC to use depending on the target gas flow requested.

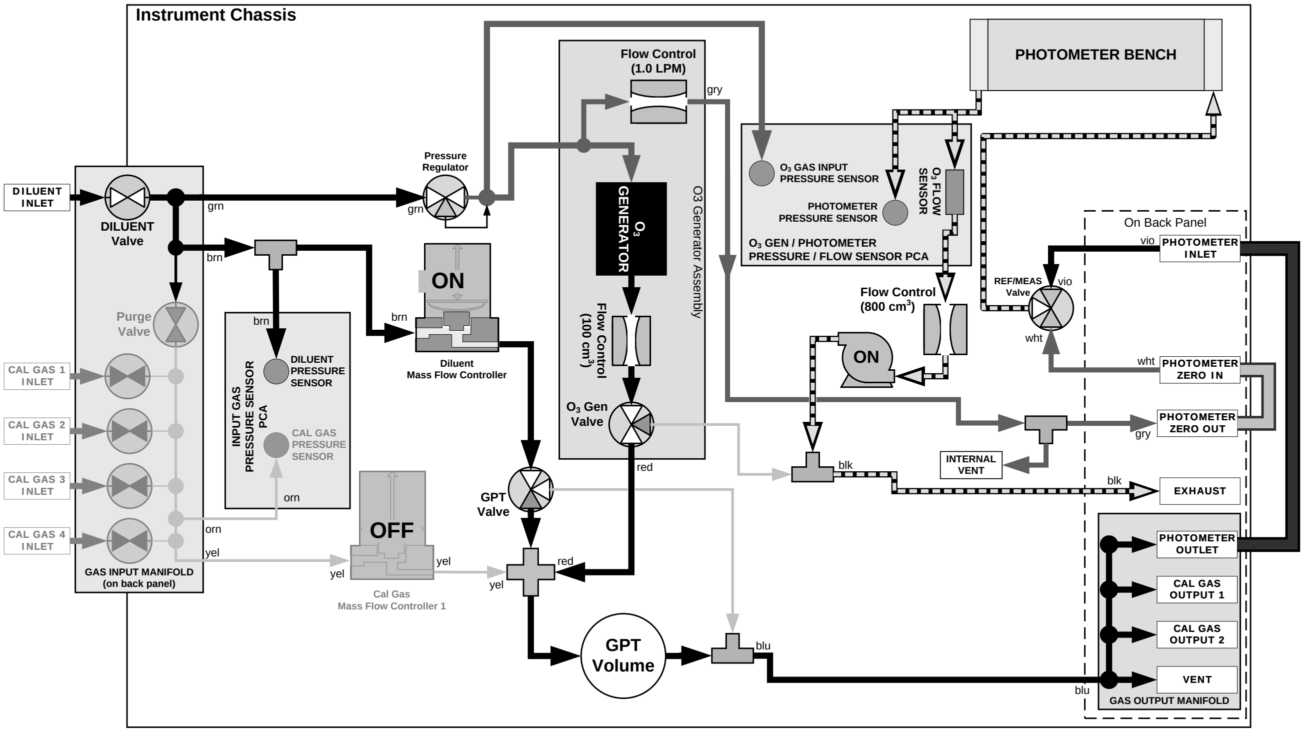
Instrument Chassis
DILUENT INLET
DILUENT Valve
grn
brn
Purge Valve
CAL GAS 1 INLET
CAL GAS 2 INLET
CAL GAS 3 INLET
CAL GAS 4 INLET
orn
yel
GAS INPUT MANIFOLD (on back panel)
brn
INPUT GAS PRESSURE SENSOR PCA
DILUENT PRESSURE SENSOR
CAL GAS PRESSURE SENSOR
orn
Pressure Regulator
grn
ON
brn
Diluent Mass Flow Controller
OFF
yel
yel
Cal Gas Mass Flow Controller 1
yel
GPT Valve
red
GPT Volume
blu
Flow Control (1.0 LPM)
gry
O3 GENERATOR
Flow Control (100 cm3)
O3 Generator Assembly
O3 Gen Valve
red
PHOTOMETER BENCH
O3 GAS INPUT PRESSURE SENSOR
PHOTOMETER PRESSURE SENSOR
O3 FLOW SENSOR
O3 GEN / PHOTOMETER PRESSURE / FLOW SENSOR PCA
Flow Control (800 cm3)
ON
blk
INTERNAL VENT
On Back Panel
vio
PHOTOMETER INLET
REF/MEAS Valve
vio
wht
wht
PHOTOMETER ZERO IN
gry
PHOTOMETER ZERO OUT
blk
EXHAUST
PHOTOMETER OUTLET
CAL GAS OUTPUT 1
CAL GAS OUTPUT 2
VENT
blu
GAS OUTPUT MANIFOLD

Figure 4-8: Gas Flow through T700 with O_3 Options when in GPTPS Mode

4.2.4.2. **Initiating a GPT Pre-Set**

To activate the **GPTPS** feature you will need to know:

- The **TOTAL GAS FLOW** for the mixture output;
- The Target O_3 concentration (equal to the target NO_2 concentration being simulated), and;
- The NO source gas concentration.

Then, press:

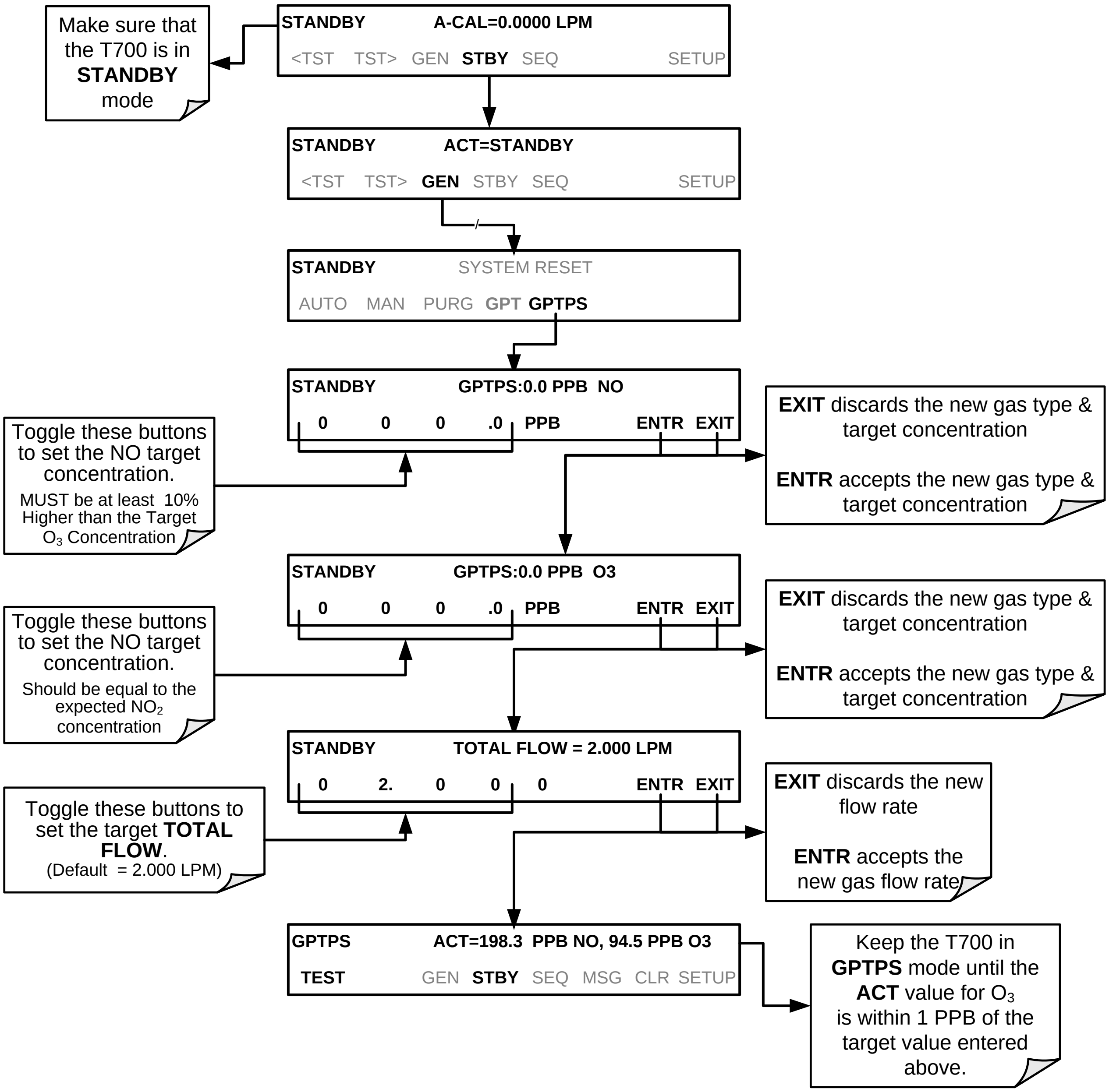
STANDBY A-CAL=0.0000 LPM
<TST TST> GEN STBY SEQ SETUP
STANDBY ACT=STANDBY
<TST TST> GEN STBY SEQ SETUP
STANDBY SYSTEM RESET
AUTO MAN PURG GPT GPTPS
STANDBY GPTPS:0.0 PPB NO
0 0 0 .0 PPB ENTR EXIT
STANDBY GPTPS:0.0 PPB O3
0 0 0 .0 PPB ENTR EXIT
STANDBY TOTAL FLOW = 2.000 LPM
0 2. 0 0 0 ENTR EXIT
GPTPS ACT=198.3 PPB NO, 94.5 PPB O3
TEST GEN STBY SEQ MSG CLR SETUP

Make sure that the T700 is in **STANDBY** mode

Toggle these buttons to set the NO target concentration.
MUST be at least 10% Higher than the Target O_3 Concentration

EXIT discards the new gas type & target concentration

ENTR accepts the new gas type & target concentration

Toggle these buttons to set the NO target concentration.
Should be equal to the expected NO_2 concentration

EXIT discards the new gas type & target concentration

ENTR accepts the new gas type & target concentration

Toggle these buttons to set the target **TOTAL FLOW**.
(Default = 2.000 LPM)

EXIT discards the new flow rate

ENTR accepts the new gas flow rate

Keep the T700 in **GPTPS** mode until the **ACT** value for O_3 is within 1 PPB of the target value entered above.

4.2.5. **GENERATE > PURGE: ACTIVATING THE T700’S PURGE FEATURE**

The T700 calibrator’s PURGE feature clears residual source gases and calibration mixtures gases from the previous generated steps from the instruments internal pneumatics as well as any external pneumatic lines downstream from the calibrator.

When activated, the **PURGE** feature:

- Opens the Diluent (zero air) inlet valve allowing zero air to flow into the calibrator form its external, pressurized source;
- Adjusts the diluent air mass flow controller (MFC1) to maximum flow;
- Adjusts all of the component gas mass flow controllers installed in the calibrator to maximum flows, 10 SLPM and 100 SCCPM accordingly, to flush out the pneumatic system of the T700.

The **PURGE** air is vented through the VENT port of the rear panel of the instrument (see Figure 3-4).

Table 4-7: Internal Pneumatics During Purge Mode

MODE	VALVES (X = Closed; O = Open)									MFCs			PHOT PUMP
	CYL 1	CYL 2	CYL 3	CYL 4	PURGE	DILUENT	GPT	O_3 GEN	PHOT M/R	CAL1	CAL2[1]	DILUENT	
PURGE	X	X	X	X	O	O	O	O	Switching	ON[3]	ON[3]	ON	ON

[1] Only present if multiple cal gas MFC option is installed.

[2] The valve associated with the cylinder containing the chosen source gas is open.

[3] In instrument with multiple MFCs the CPU chooses which MFC to use depending on the target gas flow requested.

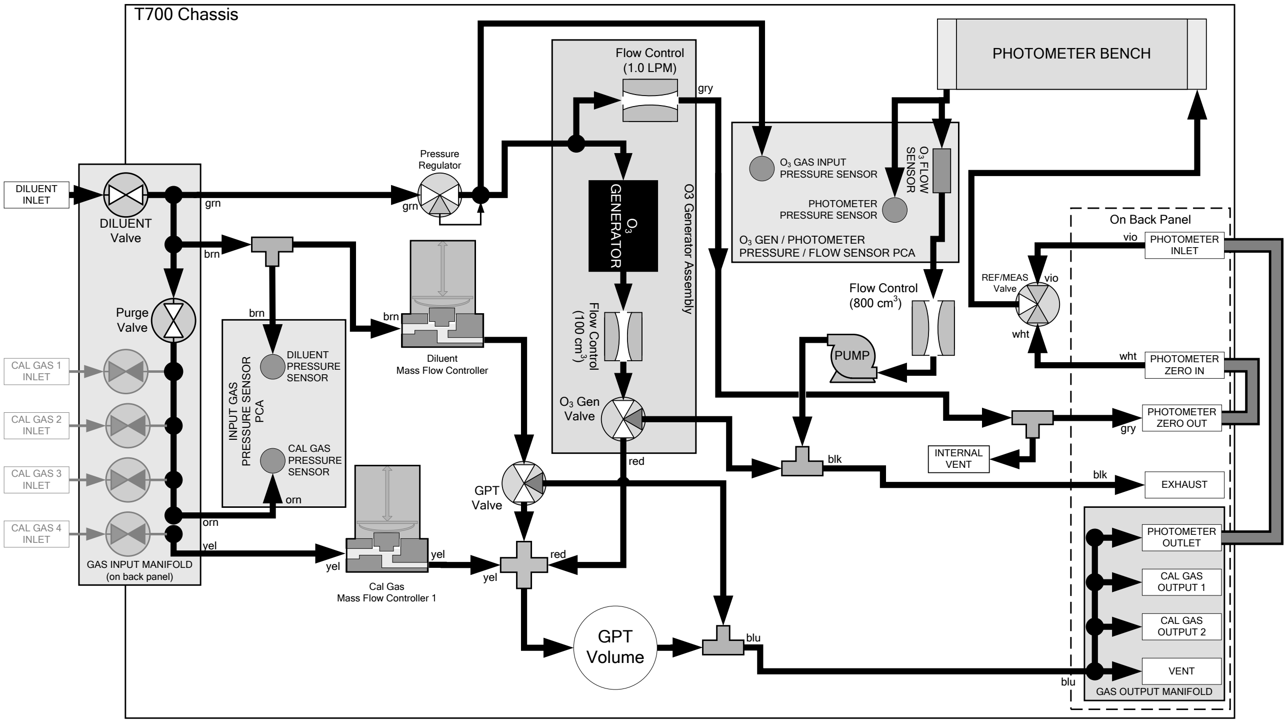
T700 Chassis
DILUENT INLET
DILUENT Valve
Purge Valve
CAL GAS 1 INLET
CAL GAS 2 INLET
CAL GAS 3 INLET
CAL GAS 4 INLET
GAS INPUT MANIFOLD (on back panel)
grn
brn
orn
yel
INPUT GAS PRESSURE SENSOR PCA
DILUENT PRESSURE SENSOR
CAL GAS PRESSURE SENSOR
Pressure Regulator
Diluent Mass Flow Controller
Cal Gas Mass Flow Controller 1
Flow Control (1.0 LPM)
gry
O3 GENERATOR
O3 Generator Assembly
Flow Control (100 cm3)
O3 Gen Valve
red
GPT Valve
GPT Volume
blu
O3 GAS INPUT PRESSURE SENSOR
PHOTOMETER PRESSURE SENSOR
O3 FLOW SENSOR
O3 GEN / PHOTOMETER PRESSURE / FLOW SENSOR PCA
PHOTOMETER BENCH
Flow Control (800 cm3)
PUMP
blk
INTERNAL VENT
REF/MEAS Valve
vio
wht
On Back Panel
PHOTOMETER INLET
PHOTOMETER ZERO IN
PHOTOMETER ZERO OUT
EXHAUST
PHOTOMETER OUTLET
CAL GAS OUTPUT 1
CAL GAS OUTPUT 2
VENT
GAS OUTPUT MANIFOLD

Figure 4-9: Gas Flow through T700 with O_3 Options when in PURGE mode

To activate the **PURGE** feature, press:

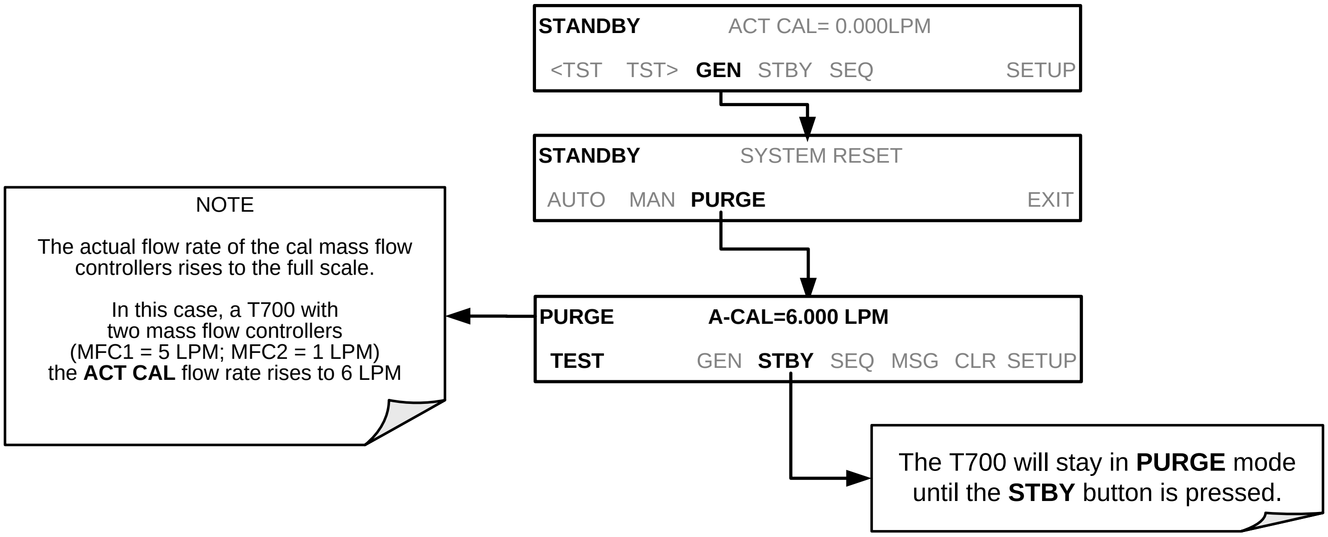
STANDBY ACT CAL= 0.000LPM
<TST TST> GEN STBY SEQ SETUP
STANDBY SYSTEM RESET
AUTO MAN PURGE EXIT
PURGE A-CAL=6.000 LPM
TEST GEN STBY SEQ MSG CLR SETUP

NOTE

The actual flow rate of the cal mass flow controllers rises to the full scale.

In this case, a T700 with two mass flow controllers (MFC1 = 5 LPM; MFC2 = 1 LPM) the **ACT CAL** flow rate rises to 6 LPM

The T700 will stay in **PURGE** mode until the **STBY** button is pressed.

IMPORTANT

IMPACT ON READINGS OR DATA

This PURGE feature does not stop automatically. Manually press the STBY button to stop the purging process..

4.2.6. GENERATE >ACT>: VIEWING CONCENTRATIONS GENERATED FROM MULTI-GAS CYLINDERS

When a concentration mixture is being generated, using a multiple-gas cylinder as a source the software uses the Diluent and Cal gas flow rates to calculate the actual concentration for each gas in the cylinder so that it is possible to see the concentrations of all of the gases being output by the T700 calibrator.

EXAMPLE: For a cylinder containing a blend of CH_4, NO and NO_2, a common contaminant is present in small quantities in bottles containing NO: This will display the actual concentration being generated for each gas in the multiple-gas cylinder.

When generating a concentration of one of the two primary gases in the cylinder (e.g. NO or CH4) using the GEN > AUTO, GEN > MANUAL buttons or a preprogrammed calibration SEQUENCE, press:

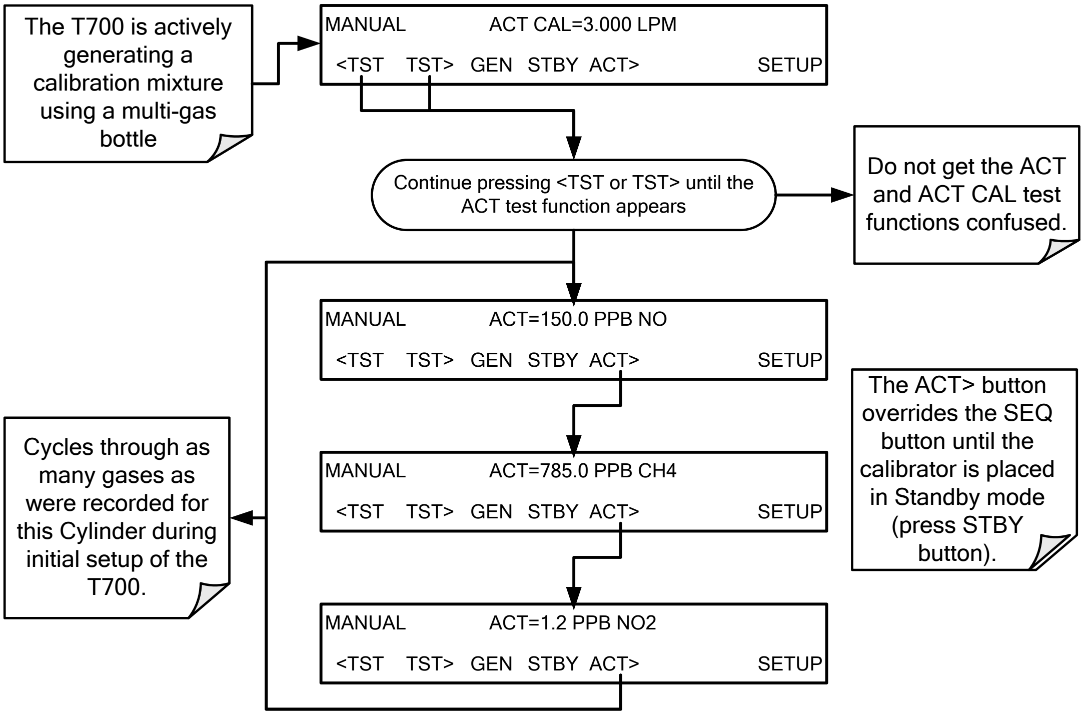
The T700 is actively generating a calibration mixture using a multi-gas bottle
MANUAL ACT CAL=3.000 LPM
<TST TST> GEN STBY ACT> SETUP
Continue pressing <TST or TST> until the ACT test function appears
Do not get the ACT and ACT CAL test functions confused.
MANUAL ACT=150.0 PPB NO
<TST TST> GEN STBY ACT> SETUP
The ACT> button overrides the SEQ button until the calibrator is placed in Standby mode (press STBY button).
Cycles through as many gases as were recorded for this Cylinder during initial setup of the T700.
MANUAL ACT=785.0 PPB CH4
<TST TST> GEN STBY ACT> SETUP
MANUAL ACT=1.2 PPB NO2
<TST TST> GEN STBY ACT> SETUP

Note

The ACT> button only appears if the T700 is generating gas from a multiple-gas cylinder. To start any preprogrammed calibration SEQuences, first place the calibrator in STANDBY mode (the SEQ button replaces the ACT> button)

For NO cylinders, the instrument will only display the amount of NO_2 in the calibration mixture if the concentration of NO_2 present in the bottle is known and was programmed into the bottle's definition (see Section 3.4.7).

4.2.6.1. Using the T700 Calibrator as an O_3 Photometer

If the T700 calibrator is equipped with the optional O_3 photometer the **ACT>** test function allows it to be used as an O_3 photometer to measure external sources of O_3.

4.3. AUTOMATIC CALIBRATION SEQUENCES

The T700 calibrator can be set up to perform automatic calibration sequences of multiple steps. These sequences can perform all of the calibration mixture operations available for manual operation and can be initiated by one of the following methods:

- front panel touch screen buttons
- internal timer,
- external digital control inputs
- RS-232 interface
- Ethernet interface
- sub-processes in another sequence

4.3.1. SETUP > SEQ: PROGRAMMING CALIBRATION SEQUENCES

A sequence is a database of single or multiple steps where each single step is an instruction that causes the instrument to perform an operation. These steps are grouped under a user defined SEQUENCE NAME.

For each sequence, there are seven attributes that must be programmed. They attributes are listed in Table 4-8.

Table 4-8: Automatic Calibration SEQUENCE Set Up Attributes

ATTRIBUTE NAME	DESCRIPTION
NAME	Allows the user to create a text string of up to 10 characters identifying the sequence.
REPEAT COUNT	Number of times, between 0 and 100, to execute the same sequence. A value of 0 (zero) causes the sequence to execute indefinitely.
CC INPUT	Specifies which of the T700's Digital Control Inputs will initiate the sequence.
CC OUTPUT	Specifies which of the T700's Digital Control Outputs will be set when the sequence is active.
TIMER ENABLE	Enables or disables an internal automatic timer that can initiate sequences using the T700's built in clock.
STEPS	A series of submenus for programming the activities and instructions that make up the calibration sequence.
PROGRESS MODE	Allows the user to select the reporting style the calibrator uses to report the progress of the sequences , on the front panels display, as it runs.

The types of instruction steps available for creating calibration sequences are listed in Table 4-9.

Table 4-9: Calibration SEQUENCE Step Instruction

INSTRUCTION NAME	DESCRIPTION
GENERATE	Puts the instrument into **GENERATE** mode. Similar in operation and effect to the **GENERATE** > **AUTO** function used at the front panel.
GPT	Initiates a Gas Phase Titration operation.
GPTPS	Initiates a Gas Phase Titration Preset procedure.
PURGE	Puts the calibrator into **PURGE** mode.
DURATION	Adds a period of time between the previous instruction and the next
EXECSEQ	Calls another sequence to be executed at this time. The calling sequence will resume running when the called sequence is completed. Up to 5 levels of nested sequences can be programmed.
SETCCOUTPUT	Allows the sequence to activate the T700's digital control outputs. Similar to the CC OUPUT attribute, but can be set and reset by individual steps.
MANUAL	Puts the instrument into **GENERATE** mode. Similar in operation and effect to the **GENERATE** > **MAN** function used at the front panel.

Note

It is generally a good idea to end each calibration sequence with a PURGE instruction followed by an instruction to return the instrument to STANDBY mode.

Even if a PURGE is not included, the last instruction in a sequence should always be to place the T700 in STANDBY mode.

To create a sequence, use the instructions in the following sections to name the sequence, set its associated parameters and define the steps to be included.

4.3.1.1. Activating a Sequence from the T700 Front Panel

To activate an already programmed sequence from the front panel, press:

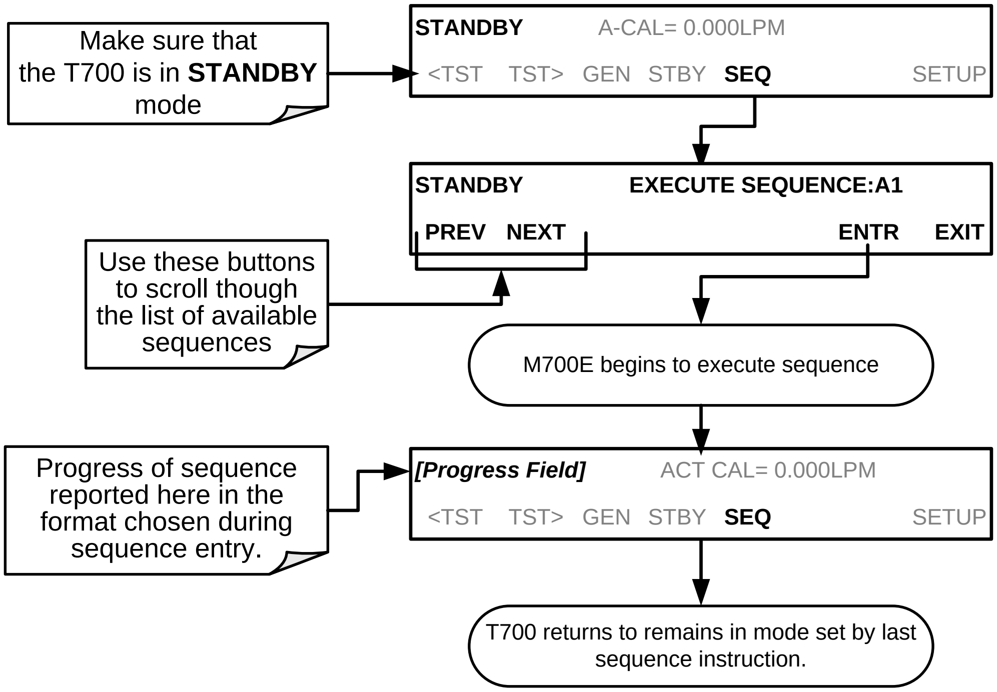
Make sure that the T700 is in STANDBY mode
STANDBY A-CAL= 0.000LPM
<TST TST> GEN STBY SEQ SETUP
STANDBY EXECUTE SEQUENCE:A1
PREV NEXT ENTR EXIT
Use these buttons to scroll though the list of available sequences
M700E begins to execute sequence
[Progress Field] ACT CAL= 0.000LPM
<TST TST> GEN STBY SEQ SETUP
Progress of sequence reported here in the format chosen during sequence entry.
T700 returns to remains in mode set by last sequence instruction.

4.3.1.2. **Naming a Sequence**

The first step of creating a calibration sequence is to assign it a name. The name can be up to 10 characters and can be comprised of any alpha character (A to Z), and numeral (0 to 9) or the underscore character ("_").

Note **All sequences should be assigned a unique name.**

To assign a name to a sequence, press:

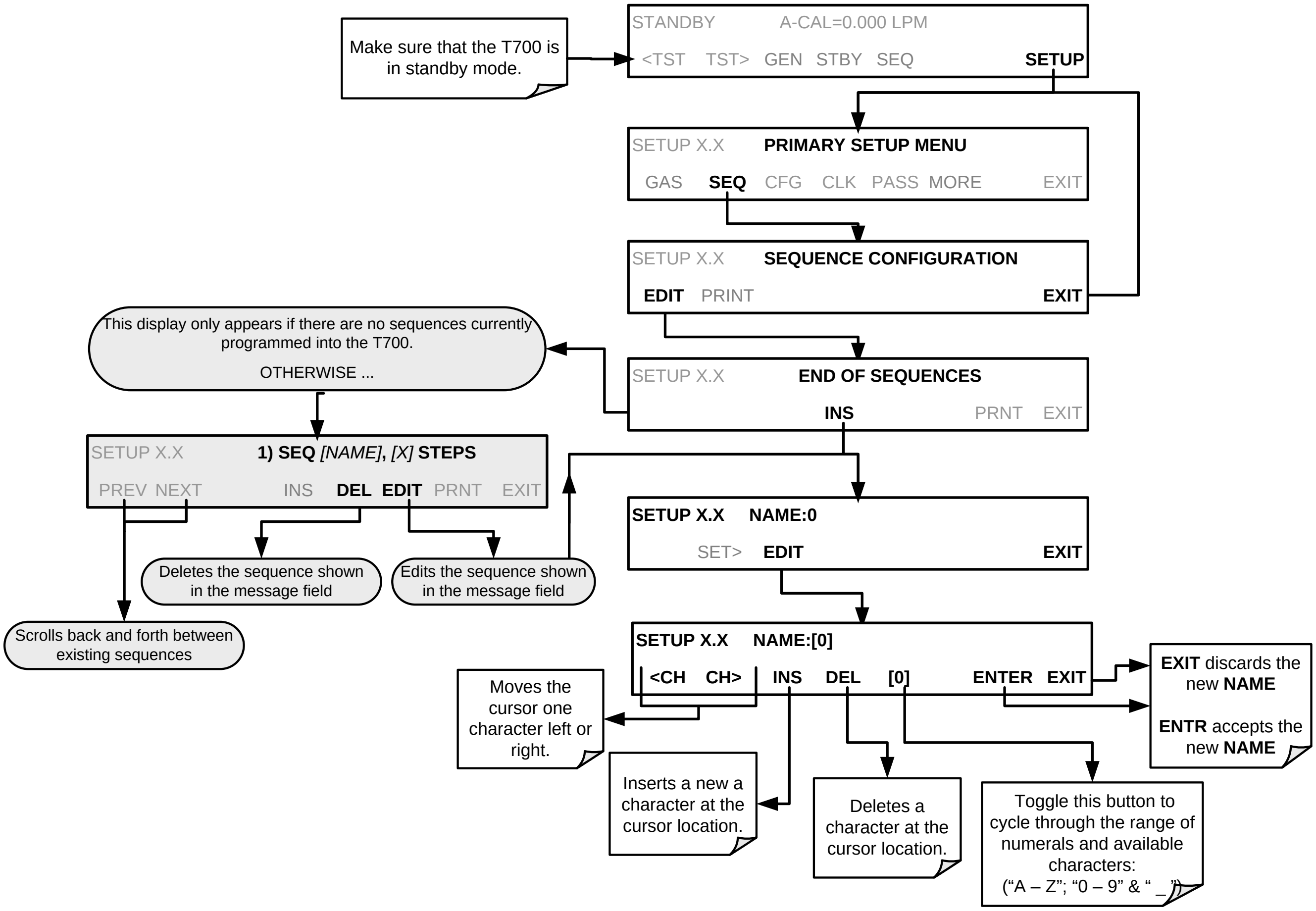

Make sure that the T700 is in standby mode.
STANDBY A-CAL=0.000 LPM
<TST TST> GEN STBY SEQ SETUP
SETUP X.X PRIMARY SETUP MENU
GAS SEQ CFG CLK PASS MORE EXIT
SETUP X.X SEQUENCE CONFIGURATION
EDIT PRINT EXIT
This display only appears if there are no sequences currently programmed into the T700.
OTHERWISE ...
SETUP X.X END OF SEQUENCES
INS PRNT EXIT
SETUP X.X 1) SEQ [NAME], [X] STEPS
PREV NEXT INS DEL EDIT PRNT EXIT
Deletes the sequence shown in the message field
Edits the sequence shown in the message field
Scrolls back and forth between existing sequences
SETUP X.X NAME:0
SET> EDIT EXIT
SETUP X.X NAME:[0]
<CH CH> INS DEL [0] ENTER EXIT
EXIT discards the new NAME
ENTR accepts the new NAME
Moves the cursor one character left or right.
Inserts a new a character at the cursor location.
Deletes a character at the cursor location.
Toggle this button to cycle through the range of numerals and available characters:
("A – Z"; "0 – 9" & " _")

4.3.1.3. **Setting the Repeat Count for a Sequence**

The sequence can be set to repeat a certain number of times, from 1 to 100. It can also be set to repeat indefinitely by inputting a zero (0) into the **REPEAT COUNTER**.

To set the **REPEAT COUNTER**, press:

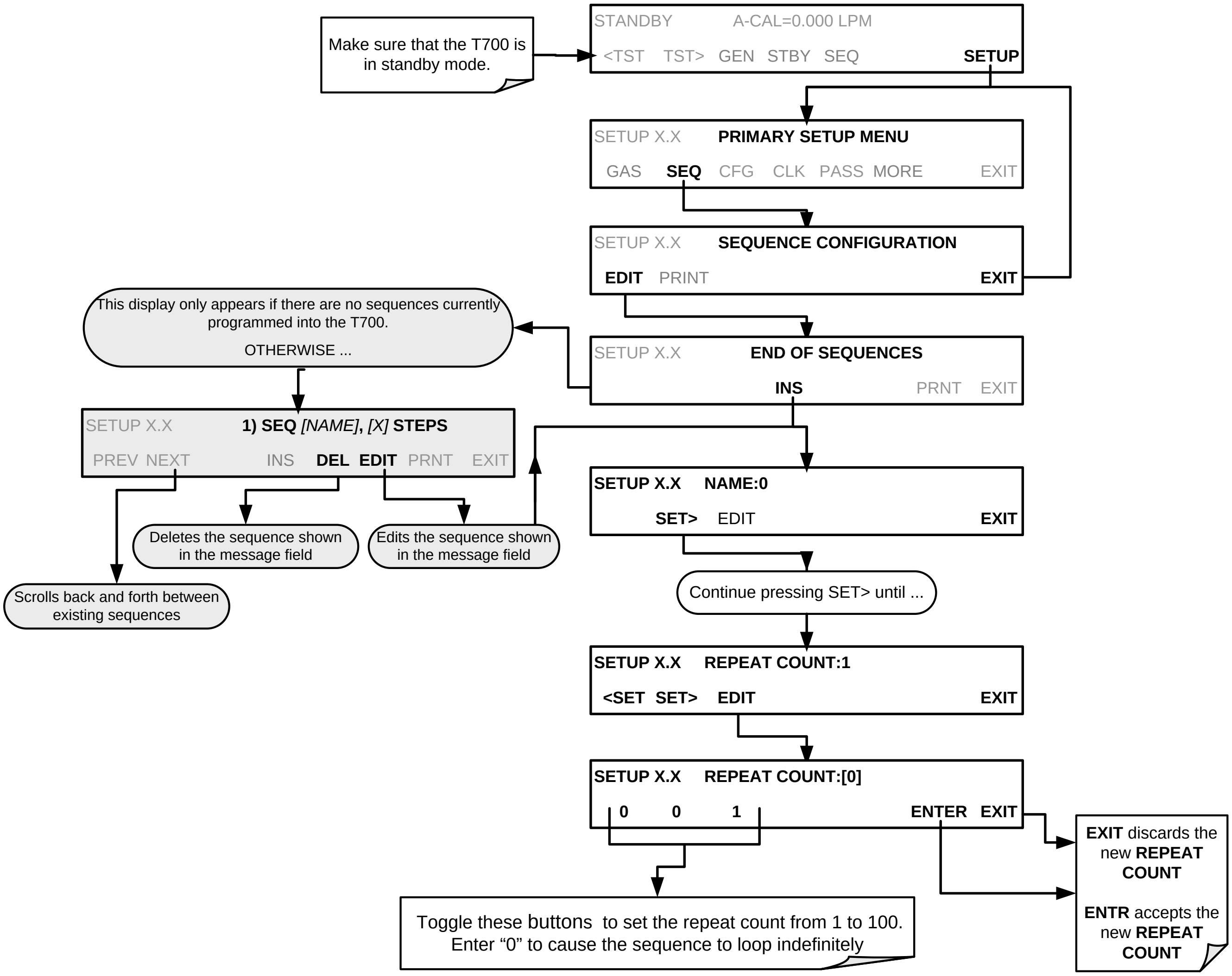
STANDBY A-CAL=0.000 LPM
<TST TST> GEN STBY SEQ SETUP
SETUP X.X PRIMARY SETUP MENU
GAS SEQ CFG CLK PASS MORE EXIT
SETUP X.X SEQUENCE CONFIGURATION
EDIT PRINT EXIT
SETUP X.X END OF SEQUENCES
INS PRNT EXIT
SETUP X.X 1) SEQ [NAME], [X] STEPS
PREV NEXT INS DEL EDIT PRNT EXIT
SETUP X.X NAME:0
SET> EDIT EXIT
SETUP X.X REPEAT COUNT:1
<SET SET> EDIT EXIT
SETUP X.X REPEAT COUNT:[0]
0 0 1 ENTER EXIT

Make sure that the T700 is in standby mode.

This display only appears if there are no sequences currently programmed into the T700.

OTHERWISE ...

Deletes the sequence shown in the message field

Edits the sequence shown in the message field

Scrolls back and forth between existing sequences

Continue pressing SET> until ...

Toggle these buttons to set the repeat count from 1 to 100. Enter “0” to cause the sequence to loop indefinitely

EXIT discards the new **REPEAT COUNT**

ENTR accepts the new **REPEAT COUNT**

4.3.1.4. **Using the T700's Internal Clock to Trigger Sequences**

Sequences can be set to trigger based on the T700's internal clock. The sequence can be set up to start at a predetermined date and time. It can also be set to repeat after a predetermined delay time.

So activate and sequence timer, press:

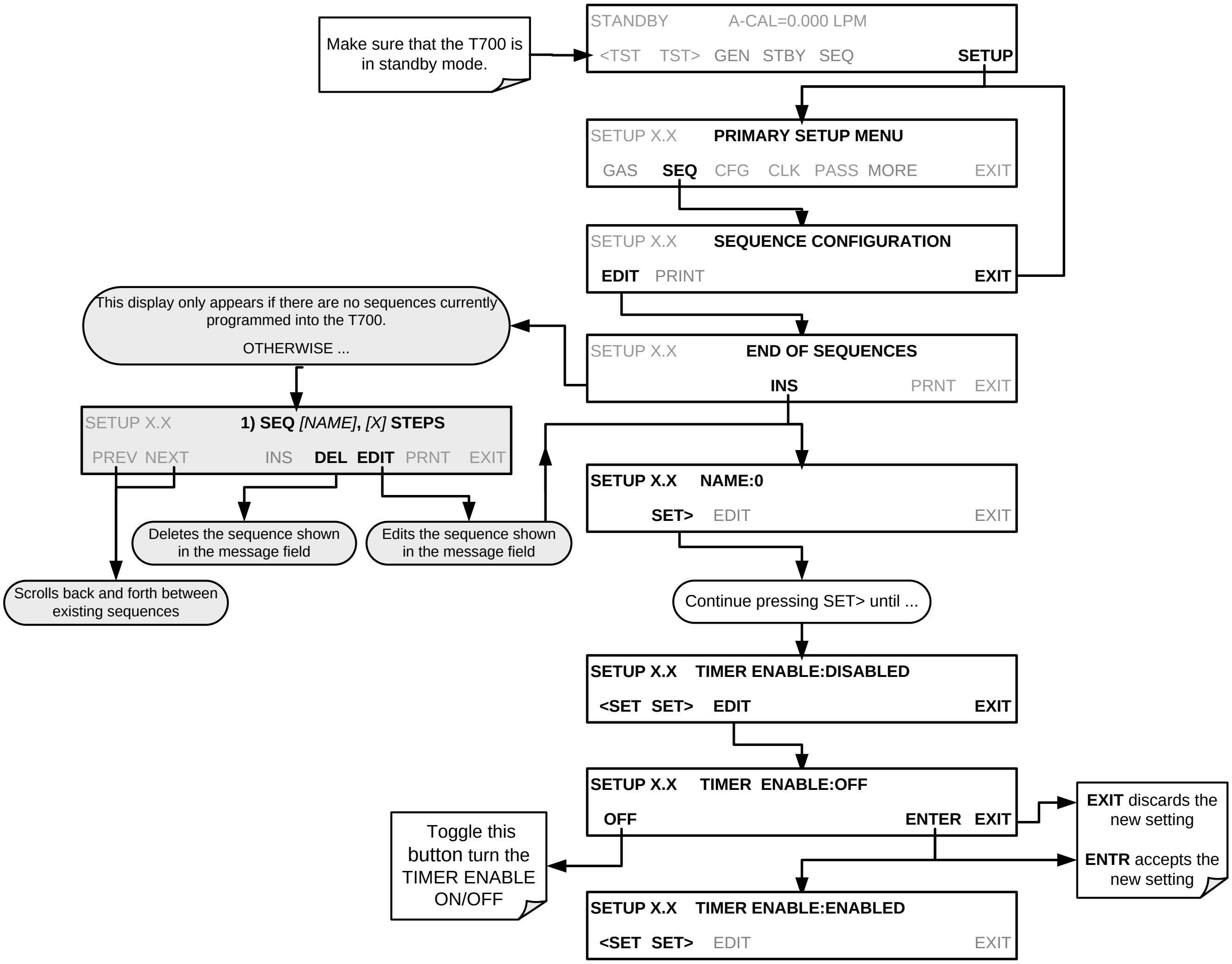
Make sure that the T700 is in standby mode.
STANDBY A-CAL=0.000 LPM
<TST TST> GEN STBY SEQ SETUP
SETUP X.X PRIMARY SETUP MENU
GAS SEQ CFG CLK PASS MORE EXIT
SETUP X.X SEQUENCE CONFIGURATION
EDIT PRINT EXIT
This display only appears if there are no sequences currently programmed into the T700.
OTHERWISE ...
SETUP X.X END OF SEQUENCES
INS PRNT EXIT
SETUP X.X 1) SEQ [NAME], [X] STEPS
PREV NEXT INS DEL EDIT PRNT EXIT
Deletes the sequence shown in the message field
Edits the sequence shown in the message field
Scrolls back and forth between existing sequences
SETUP X.X NAME:0
SET> EDIT EXIT
Continue pressing SET> until ...
SETUP X.X TIMER ENABLE:DISABLED
<SET SET> EDIT EXIT
SETUP X.X TIMER ENABLE:OFF
OFF ENTER EXIT
EXIT discards the new setting
ENTR accepts the new setting
Toggle this button turn the TIMER ENABLE ON/OFF
SETUP X.X TIMER ENABLE:ENABLED
<SET SET> EDIT EXIT

To specify a starting date and time for the sequence, press:

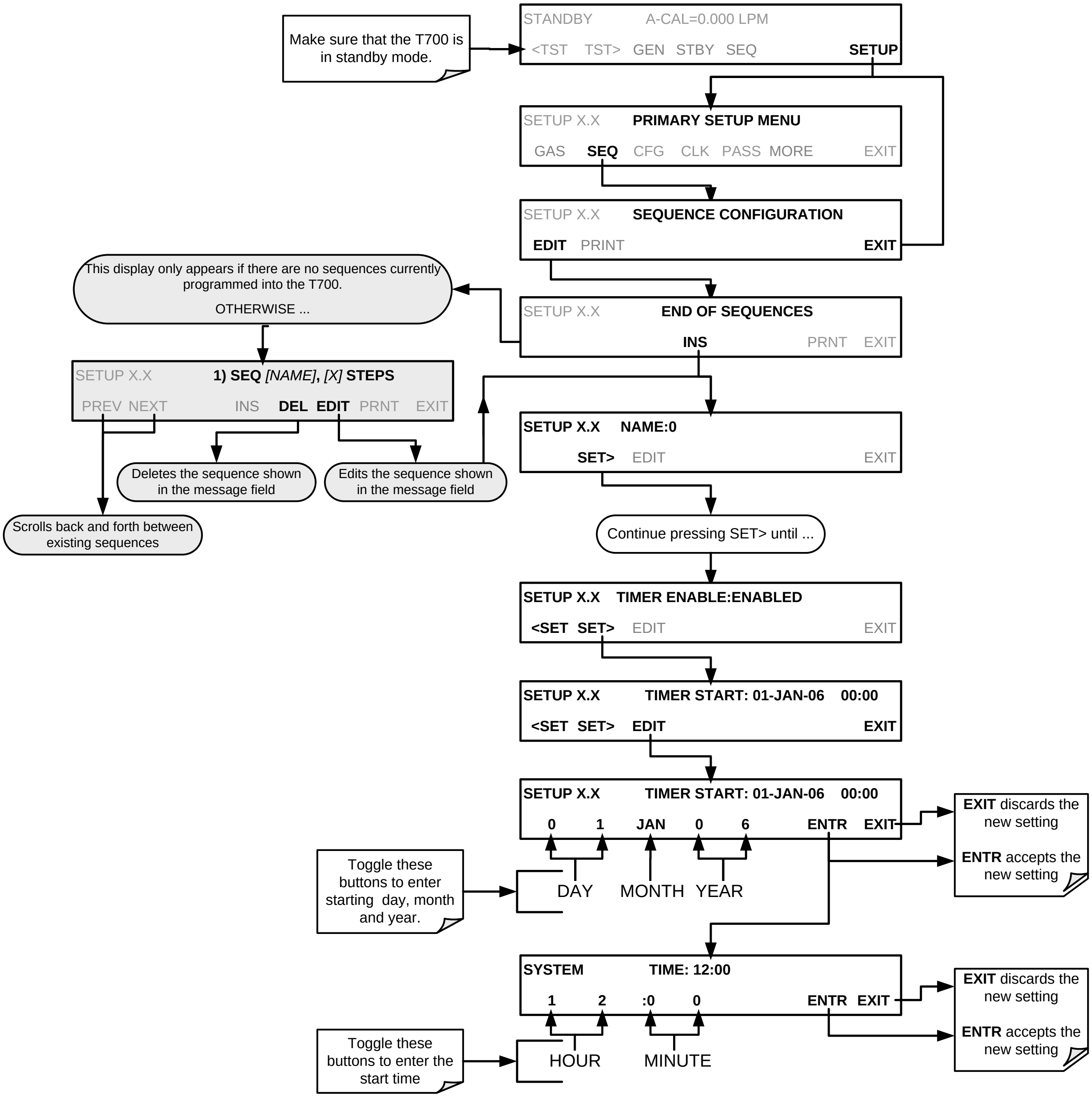
Make sure that the T700 is in standby mode.
STANDBY A-CAL=0.000 LPM
<TST TST> GEN STBY SEQ SETUP
SETUP X.X PRIMARY SETUP MENU
GAS SEQ CFG CLK PASS MORE EXIT
SETUP X.X SEQUENCE CONFIGURATION
EDIT PRINT EXIT
This display only appears if there are no sequences currently programmed into the T700.
OTHERWISE ...
SETUP X.X END OF SEQUENCES
INS PRNT EXIT
SETUP X.X 1) SEQ [NAME], [X] STEPS
PREV NEXT INS DEL EDIT PRNT EXIT
Deletes the sequence shown in the message field
Edits the sequence shown in the message field
Scrolls back and forth between existing sequences
SETUP X.X NAME:0
SET> EDIT EXIT
Continue pressing SET> until ...
SETUP X.X TIMER ENABLE:ENABLED
<SET SET> EDIT EXIT
SETUP X.X TIMER START: 01-JAN-06 00:00
<SET SET> EDIT EXIT
SETUP X.X TIMER START: 01-JAN-06 00:00
0 1 JAN 0 6 ENTR EXIT
Toggle these buttons to enter starting day, month and year.
DAY MONTH YEAR
EXIT discards the new setting
ENTR accepts the new setting
SYSTEM TIME: 12:00
1 2 :0 0 ENTR EXIT
Toggle these buttons to enter the start time
HOUR MINUTE
EXIT discards the new setting
ENTR accepts the new setting

Note **When the start time is set for a date/time that has passed, the sequence will properly calculate the next run time based on that past date/time.**

To set the delta timer, press:

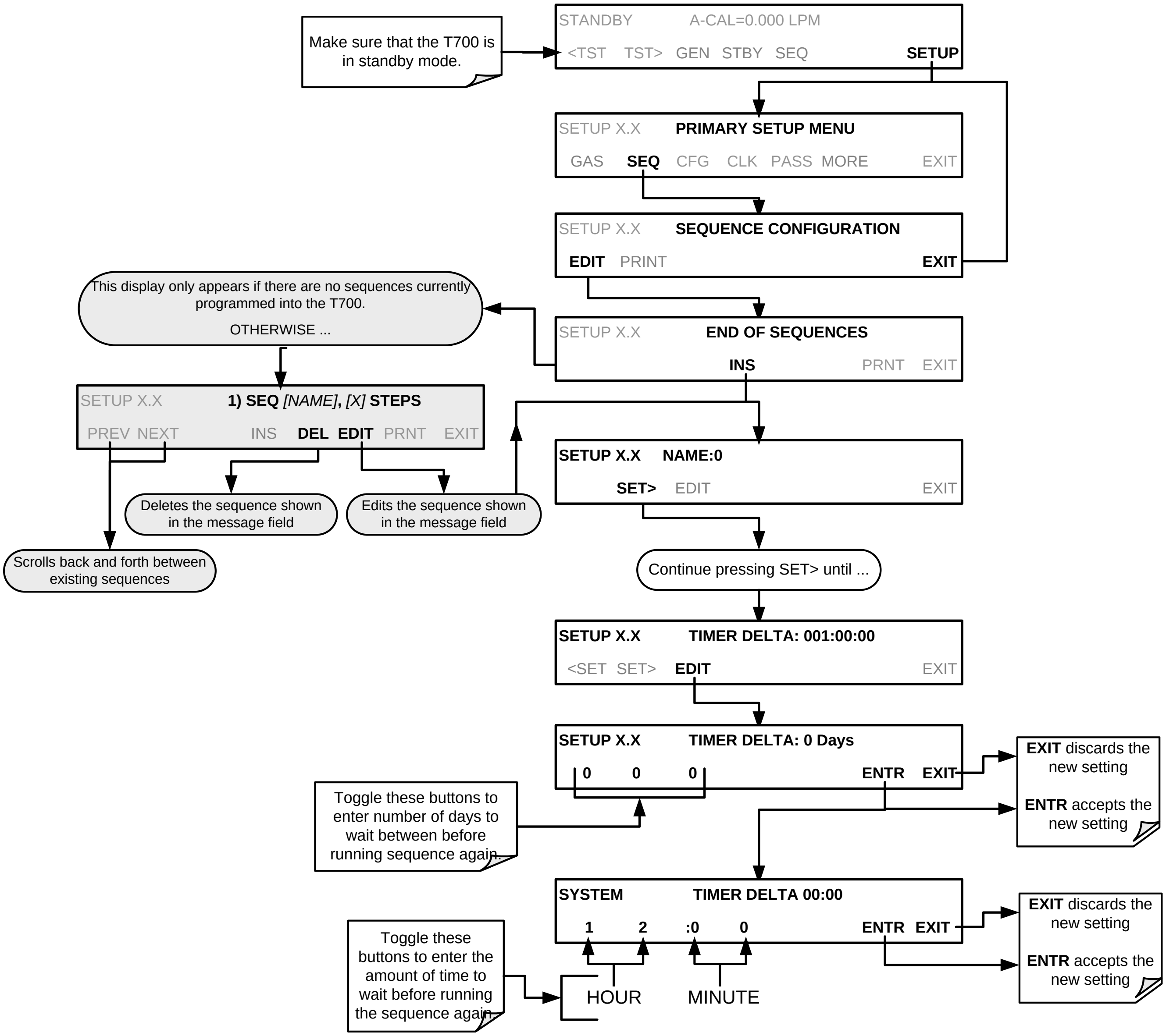
STANDBY A-CAL=0.000 LPM
<TST TST> GEN STBY SEQ SETUP
SETUP X.X PRIMARY SETUP MENU
GAS SEQ CFG CLK PASS MORE EXIT
SETUP X.X SEQUENCE CONFIGURATION
EDIT PRINT EXIT
SETUP X.X END OF SEQUENCES
INS PRNT EXIT
SETUP X.X 1) SEQ [NAME], [X] STEPS
PREV NEXT INS DEL EDIT PRNT EXIT
SETUP X.X NAME:0
SET> EDIT EXIT
SETUP X.X TIMER DELTA: 001:00:00
<SET SET> EDIT EXIT
SETUP X.X TIMER DELTA: 0 Days
0 0 0 ENTR EXIT
SYSTEM TIMER DELTA 00:00
1 2 :0 0 ENTR EXIT
HOUR
MINUTE

Make sure that the T700 is in standby mode.

This display only appears if there are no sequences currently programmed into the T700.

OTHERWISE ...

Deletes the sequence shown in the message field

Edits the sequence shown in the message field

Scrolls back and forth between existing sequences

Continue pressing SET> until ...

Toggle these buttons to enter number of days to wait between before running sequence again.

EXIT discards the new setting

ENTR accepts the new setting

Toggle these buttons to enter the amount of time to wait before running the sequence again.

EXIT discards the new setting

ENTR accepts the new setting

4.3.1.5. **Setting Up Control Inputs for a Sequence**

The T700 calibrator's control inputs allow the entire sequence to be triggered from an external source. This feature allows the calibrator to operate in a slave mode so that external control sources, such as a data logger can initiate the calibration sequences.

Each of the T700 calibrator's control outputs is located on the back of the instrument (see Figure 3-4).

- 12 separate ON/OFF switches assigned to separate calibration sequences or;
- A 12-bit wide bus allowing the user to define activation codes for up to 4095 separate calibration sequences.

To assign a **CC INPUT** pattern/code to a particular sequence, press:

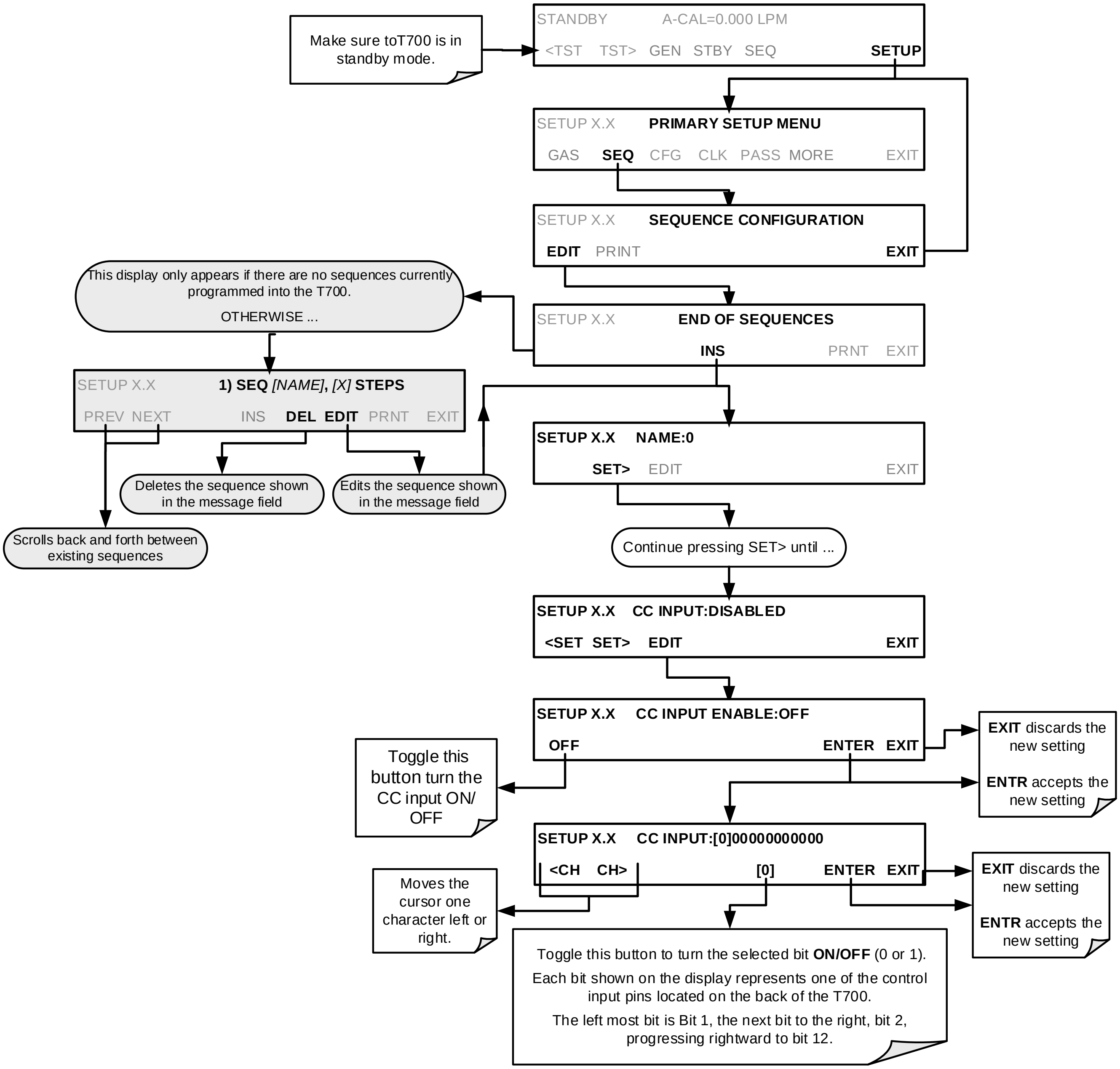
STANDBY A-CAL=0.000 LPM
<TST TST> GEN STBY SEQ SETUP
SETUP X.X PRIMARY SETUP MENU
GAS SEQ CFG CLK PASS MORE EXIT
SETUP X.X SEQUENCE CONFIGURATION
EDIT PRINT EXIT
SETUP X.X END OF SEQUENCES
INS PRNT EXIT
SETUP X.X 1) SEQ [NAME], [X] STEPS
PREV NEXT INS DEL EDIT PRNT EXIT
SETUP X.X NAME:0
SET> EDIT EXIT
SETUP X.X CC INPUT:DISABLED
<SET SET> EDIT EXIT
SETUP X.X CC INPUT ENABLE:OFF
OFF ENTER EXIT
SETUP X.X CC INPUT:[0]00000000000
<CH CH> [0] ENTER EXIT

Make sure toT700 is in standby mode.

This display only appears if there are no sequences currently programmed into the T700.

OTHERWISE ...

Deletes the sequence shown in the message field

Edits the sequence shown in the message field

Scrolls back and forth between existing sequences

Continue pressing SET> until ...

Toggle this button turn the CC input ON/ OFF

EXIT discards the new setting

ENTR accepts the new setting

Moves the cursor one character left or right.

Toggle this button to turn the selected bit **ON/OFF** (0 or 1).

Each bit shown on the display represents one of the control input pins located on the back of the T700.

The left most bit is Bit 1, the next bit to the right, bit 2, progressing rightward to bit 12.

EXIT discards the new setting

ENTR accepts the new setting

4.3.1.6. **Setting Up Control Outputs for a Sequence**

The T700 calibrator's control outputs allow the calibrator to control devices that accept logic-level digital inputs, such as programmable logic controllers (PLCs), data loggers, or digital relays/valve drivers.

They can be used as:

- 12 separate ON/OFF switches assigned to separate calibration sequences, or;
- A 12-bit wide bus allowing the user to define activation codes for up to 4095 separate calibration sequences.

They can be set to:

- Be active whenever a particular calibration sequence is operating, or;
- Activate/deactivate as individual steps within a calibration sequence are run (see Section 4.3.2.8).

To assign a **CC OUTPUT** pattern/code to a particular sequence, press:

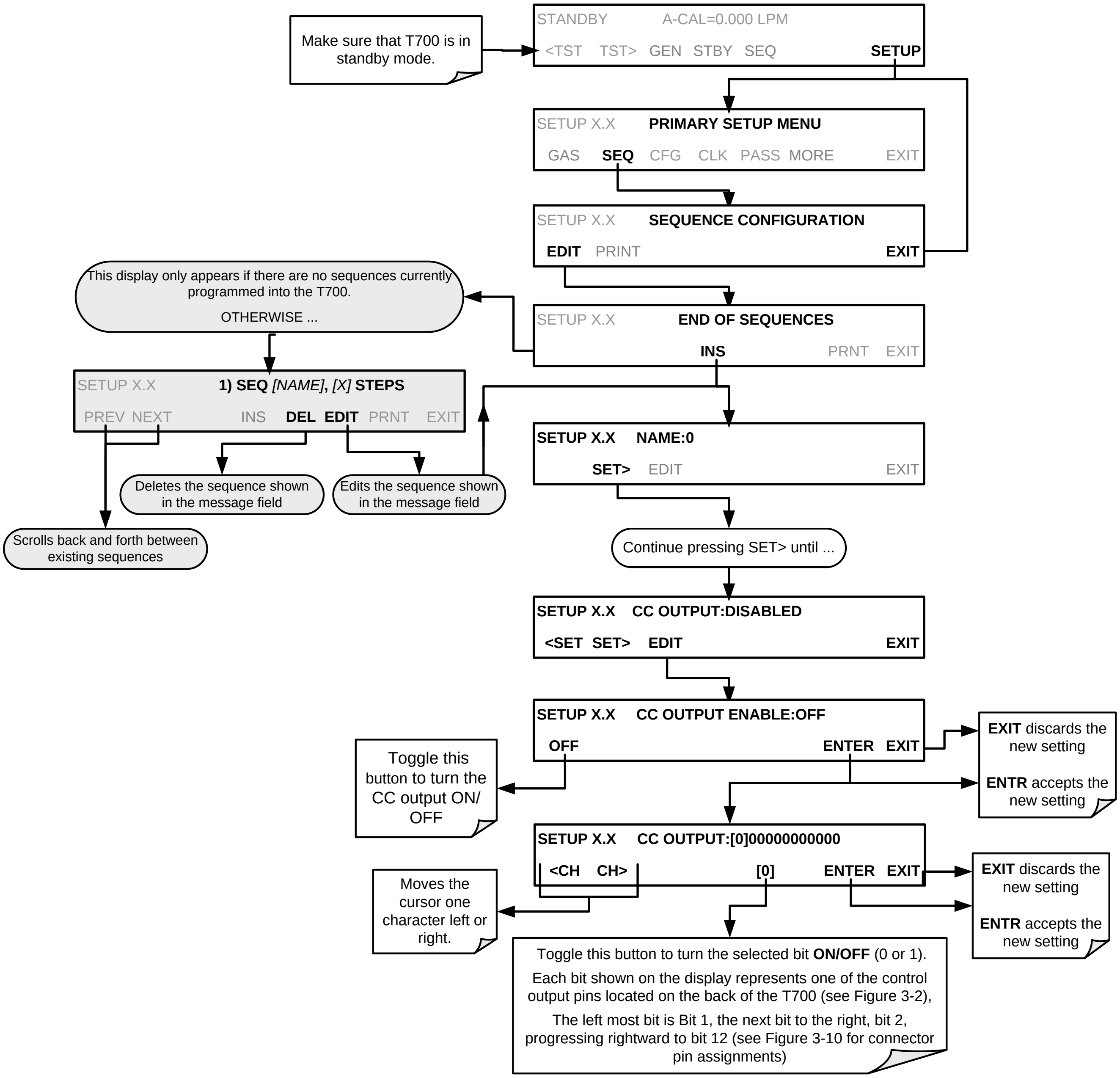
STANDBY A-CAL=0.000 LPM
<TST TST> GEN STBY SEQ SETUP
SETUP X.X PRIMARY SETUP MENU
GAS SEQ CFG CLK PASS MORE EXIT
SETUP X.X SEQUENCE CONFIGURATION
EDIT PRINT EXIT
SETUP X.X END OF SEQUENCES
INS PRNT EXIT
SETUP X.X 1) SEQ [NAME], [X] STEPS
PREV NEXT INS DEL EDIT PRNT EXIT
SETUP X.X NAME:0
SET> EDIT EXIT
SETUP X.X CC OUTPUT:DISABLED
<SET SET> EDIT EXIT
SETUP X.X CC OUTPUT ENABLE:OFF
OFF ENTER EXIT
SETUP X.X CC OUTPUT:[0]00000000000
<CH CH> [0] ENTER EXIT

Make sure that T700 is in standby mode.

This display only appears if there are no sequences currently programmed into the T700.

OTHERWISE ...

Deletes the sequence shown in the message field

Edits the sequence shown in the message field

Scrolls back and forth between existing sequences

Continue pressing SET> until ...

EXIT discards the new setting

ENTR accepts the new setting

Toggle this button to turn the CC output ON/ OFF

Moves the cursor one character left or right.

EXIT discards the new setting

ENTR accepts the new setting

Toggle this button to turn the selected bit **ON/OFF** (0 or 1).

Each bit shown on the display represents one of the control output pins located on the back of the T700 (see Figure 3-2),

The left most bit is Bit 1, the next bit to the right, bit 2, progressing rightward to bit 12 (see Figure 3-10 for connector pin assignments)

4.3.1.7. **Setting the PROGRESS Reporting Mode for the Sequences**

As sequences run, the T700 calibrator reports progress by displaying a message in the MODE field of the front panel display (See Figure 3-1). There are several types of report modes available (see Table 4-10).

Table 4-10: Sequence Progress Reporting Mode

MODE	DESCRIPTION
STEP	Shows the progress as the sequence name and step number. This is the traditional display. Example: Progress for a sequence named “SO2_Test” would appear as “SO2_Test-2”, indicating that it is currently executing step 2.
PCT	Shows the progress as a percent (0–100%) of each duration step. Example: “SEQ 48%”
ELAP	Shows the progress as time elapsed in hours, minutes and seconds, counting upward from 0. Example: “T+01:30:25” (i.e. 1 hour, 30 minutes, 25 seconds have elapsed)
REM	Shows the progress as time remaining in hours, minutes, and seconds remaining, counting downward to 0. Example: “T-01:30:25” (i.e. 1 hour, 30 minutes, 25 seconds are remaining)

To select a PROGRESS report mode, press:

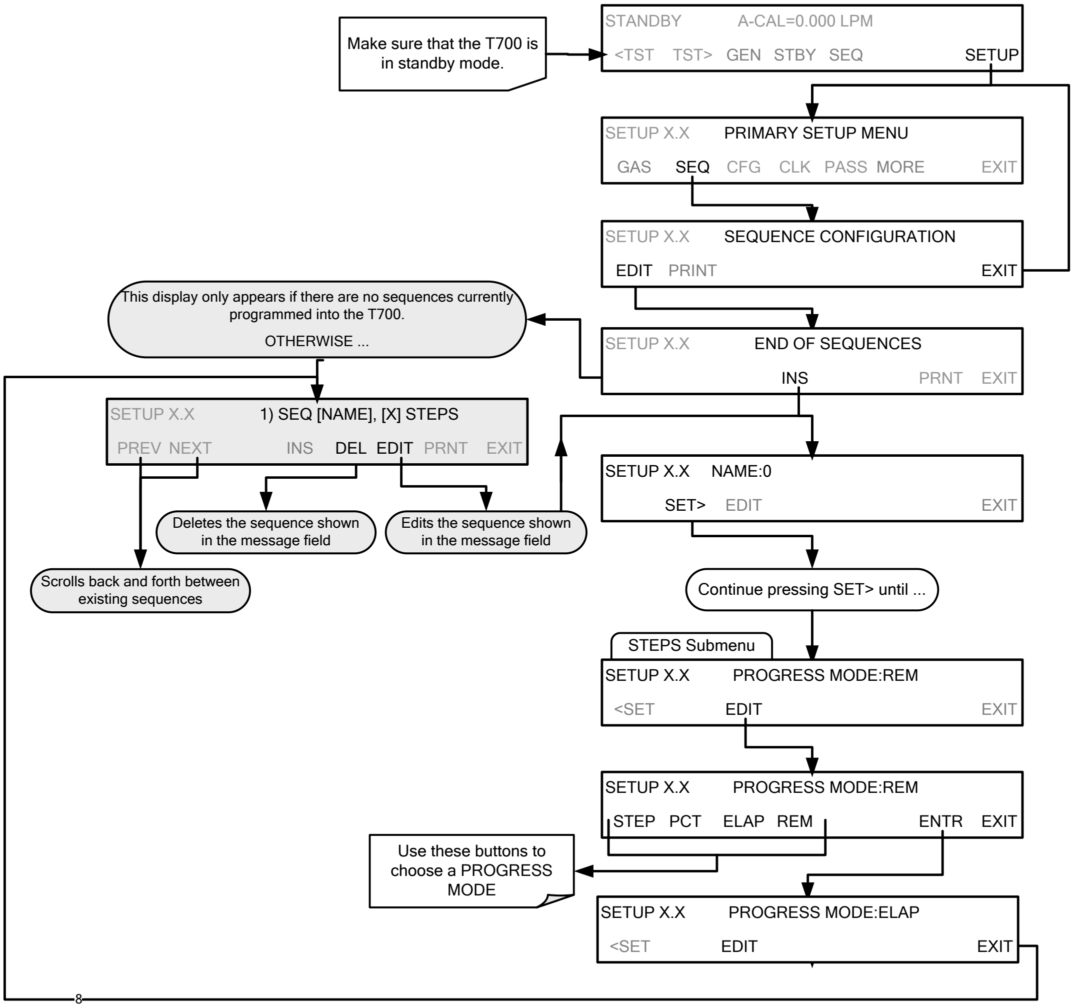
STANDBY A-CAL=0.000 LPM
<TST TST> GEN STBY SEQ SETUP
SETUP X.X PRIMARY SETUP MENU
GAS SEQ CFG CLK PASS MORE EXIT
SETUP X.X SEQUENCE CONFIGURATION
EDIT PRINT EXIT
SETUP X.X END OF SEQUENCES
INS PRNT EXIT
SETUP X.X 1) SEQ [NAME], [X] STEPS
PREV NEXT INS DEL EDIT PRNT EXIT
SETUP X.X NAME:0
SET> EDIT EXIT
STEPS Submenu
SETUP X.X PROGRESS MODE:REM
<SET EDIT EXIT
SETUP X.X PROGRESS MODE:REM
STEP PCT ELAP REM ENTR EXIT
SETUP X.X PROGRESS MODE:ELAP
<SET EDIT EXIT

Make sure that the T700 is in standby mode.

This display only appears if there are no sequences currently programmed into the T700.

OTHERWISE ...

Deletes the sequence shown in the message field

Edits the sequence shown in the message field

Scrolls back and forth between existing sequences

Continue pressing SET> until ...

Use these buttons to choose a PROGRESS MODE

4.3.2. ADDING SEQUENCE STEPS

To insert an instruction step into a sequence, navigate to the **INSERT STEP** submenu by pressing:

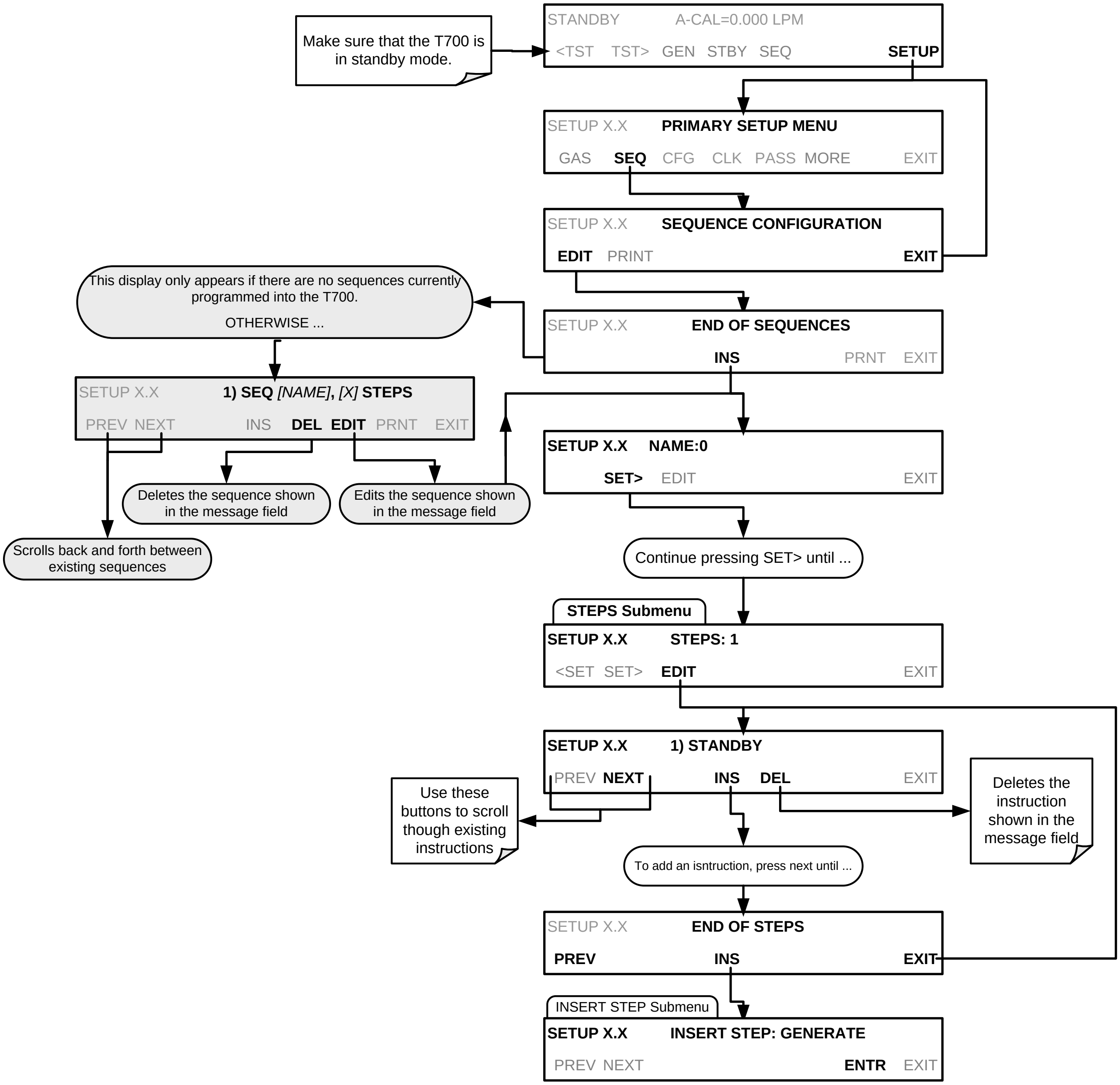
STANDBY A-CAL=0.000 LPM
<TST TST> GEN STBY SEQ SETUP
SETUP X.X PRIMARY SETUP MENU
GAS SEQ CFG CLK PASS MORE EXIT
SETUP X.X SEQUENCE CONFIGURATION
EDIT PRINT EXIT
SETUP X.X END OF SEQUENCES
INS PRNT EXIT
SETUP X.X 1) SEQ [NAME], [X] STEPS
PREV NEXT INS DEL EDIT PRNT EXIT
SETUP X.X NAME:0
SET> EDIT EXIT
STEPS Submenu
SETUP X.X STEPS: 1
<SET SET> EDIT EXIT
SETUP X.X 1) STANDBY
PREV NEXT INS DEL EXIT
SETUP X.X END OF STEPS
PREV INS EXIT
INSERT STEP Submenu
SETUP X.X INSERT STEP: GENERATE
PREV NEXT ENTR EXIT

Make sure that the T700 is in standby mode.

This display only appears if there are no sequences currently programmed into the T700.

OTHERWISE ...

Deletes the sequence shown in the message field

Edits the sequence shown in the message field

Scrolls back and forth between existing sequences

Continue pressing SET> until ...

Use these buttons to scroll though existing instructions

Deletes the instruction shown in the message field

To add an isntruction, press next until ...

4.3.2.1. **The GENERATE Step**

This step operates and is programmed similarly to the **GENERATE > AUTO.**

At the end of the programming sequence, the T700 firmware will automatically insert a **DURATION** step that needs to be defined.

To insert a **GENERATE** step into a sequence, press:

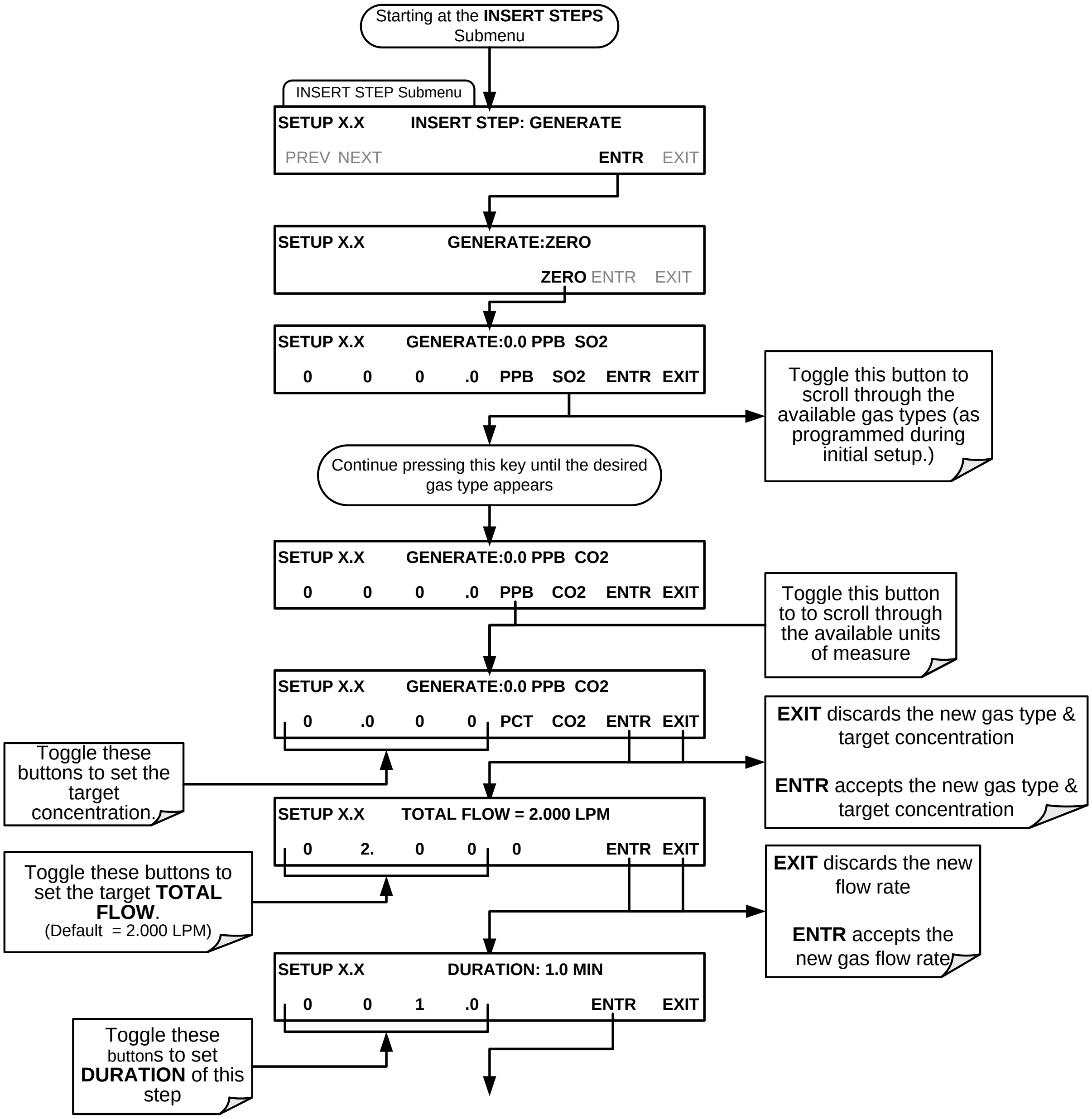
Starting at the INSERT STEPS Submenu
INSERT STEP Submenu
SETUP X.X INSERT STEP: GENERATE
PREV NEXT ENTR EXIT
SETUP X.X GENERATE:ZERO
ZERO ENTR EXIT
SETUP X.X GENERATE:0.0 PPB SO2
0 0 0 .0 PPB SO2 ENTR EXIT
Toggle this button to scroll through the available gas types (as programmed during initial setup.)
Continue pressing this key until the desired gas type appears
SETUP X.X GENERATE:0.0 PPB CO2
0 0 0 .0 PPB CO2 ENTR EXIT
Toggle this button to to scroll through the available units of measure
SETUP X.X GENERATE:0.0 PPB CO2
0 .0 0 0 PCT CO2 ENTR EXIT
Toggle these buttons to set the target concentration.
EXIT discards the new gas type & target concentration
ENTR accepts the new gas type & target concentration
SETUP X.X TOTAL FLOW = 2.000 LPM
0 2. 0 0 0 ENTR EXIT
Toggle these buttons to set the target TOTAL FLOW.
(Default = 2.000 LPM)
EXIT discards the new flow rate
ENTR accepts the new gas flow rate
SETUP X.X DURATION: 1.0 MIN
0 0 1 .0 ENTR EXIT
Toggle these buttons to set DURATION of this step

Note **If the user attempts to generate a source gas type that has not been entered into the T700's gas library, the sequence will freeze and after a certain time-out period, stop running.**

4.3.2.2. **The GPT Step**

This step operates and is programmed similarly to the **GENERATE >GPT** (see Section 4.2.3 for information on choosing the correct input values for this step)**.**

At the end of the programming sequence, the T700 firmware will automatically insert a **DURATION** step that needs to be defined.

To insert a **GPT** step into a sequence, press:

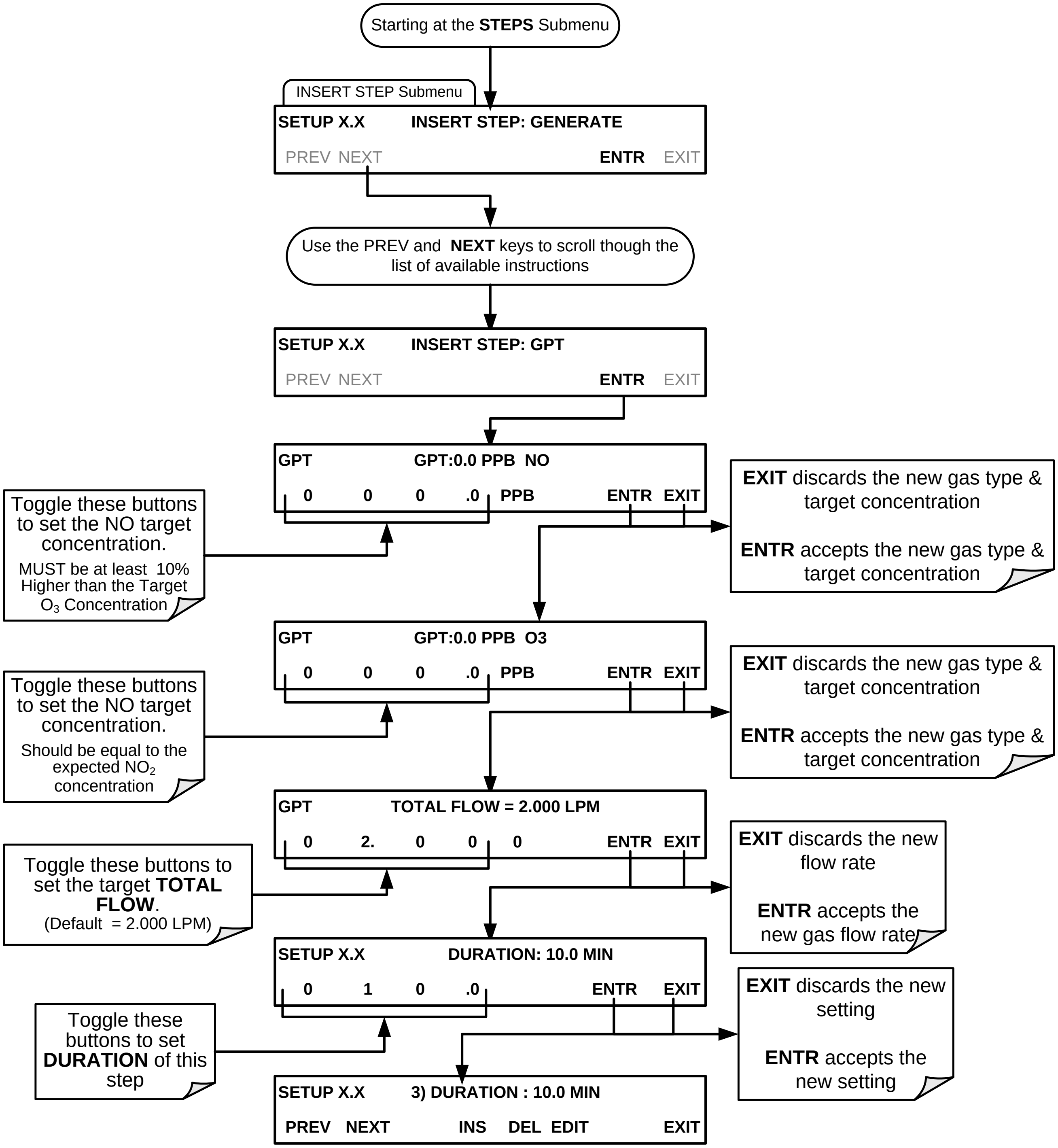
INSERT STEP Submenu
SETUP X.X INSERT STEP: GENERATE
PREV NEXT ENTR EXIT
SETUP X.X INSERT STEP: GPT
PREV NEXT ENTR EXIT
GPT GPT:0.0 PPB NO
0 0 0 .0 PPB ENTR EXIT
GPT GPT:0.0 PPB O3
0 0 0 .0 PPB ENTR EXIT
GPT TOTAL FLOW = 2.000 LPM
0 2. 0 0 0 ENTR EXIT
SETUP X.X DURATION: 10.0 MIN
0 1 0 .0 ENTR EXIT
SETUP X.X 3) DURATION : 10.0 MIN
PREV NEXT INS DEL EDIT EXIT

Starting at the **STEPS** Submenu

Use the PREV and **NEXT** keys to scroll though the list of available instructions

Toggle these buttons to set the NO target concentration.
MUST be at least 10% Higher than the Target O_3 Concentration

EXIT discards the new gas type & target concentration

ENTR accepts the new gas type & target concentration

Toggle these buttons to set the NO target concentration.
Should be equal to the expected NO_2 concentration

EXIT discards the new gas type & target concentration

ENTR accepts the new gas type & target concentration

Toggle these buttons to set the target **TOTAL FLOW**.
(Default = 2.000 LPM)

EXIT discards the new flow rate

ENTR accepts the new gas flow rate

Toggle these buttons to set **DURATION** of this step

EXIT discards the new setting

ENTR accepts the new setting

4.3.2.3. **The GPTPS Step**

This step operates and is programmed similarly to the **GENERATE >GPTPS** (see Section 4.2.4 for information on choosing the correct input values for this step)**.**

At the end of the programming sequence, the T700 firmware will automatically insert a **DURATION** step that needs to be defined.

To insert a **GPTPS** step into a sequence, press:

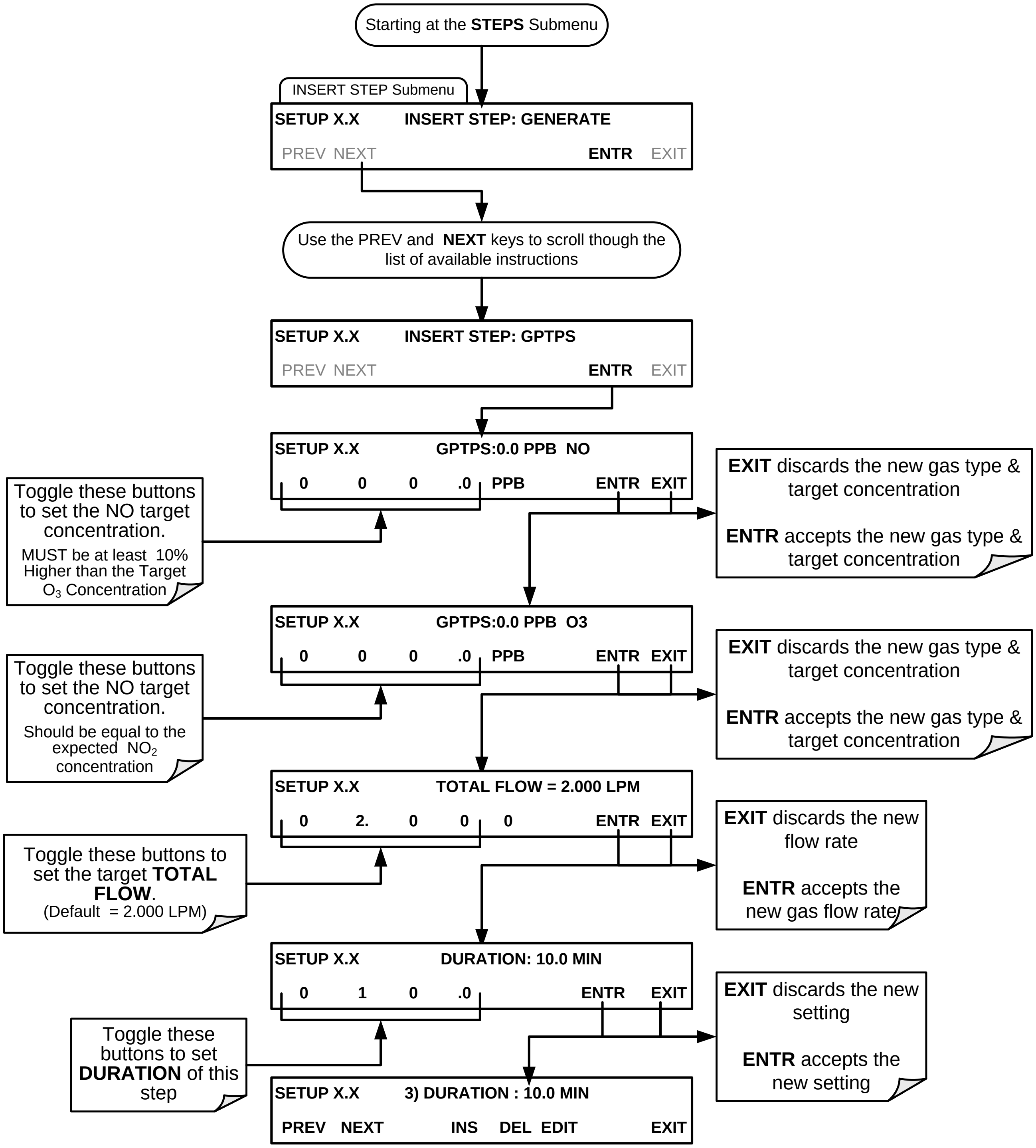
Starting at the **STEPS** Submenu
INSERT STEP Submenu
SETUP X.X INSERT STEP: GENERATE
PREV NEXT ENTR EXIT
Use the PREV and **NEXT** keys to scroll though the list of available instructions
SETUP X.X INSERT STEP: GPTPS
PREV NEXT ENTR EXIT
SETUP X.X GPTPS:0.0 PPB NO
0 0 0 .0 PPB ENTR EXIT
Toggle these buttons to set the NO target concentration.
MUST be at least 10% Higher than the Target O_3 Concentration
EXIT discards the new gas type & target concentration
ENTR accepts the new gas type & target concentration
SETUP X.X GPTPS:0.0 PPB O3
0 0 0 .0 PPB ENTR EXIT
Toggle these buttons to set the NO target concentration.
Should be equal to the expected NO_2 concentration
EXIT discards the new gas type & target concentration
ENTR accepts the new gas type & target concentration
SETUP X.X TOTAL FLOW = 2.000 LPM
0 2. 0 0 0 ENTR EXIT
Toggle these buttons to set the target **TOTAL FLOW**.
(Default = 2.000 LPM)
EXIT discards the new flow rate
ENTR accepts the new gas flow rate
SETUP X.X DURATION: 10.0 MIN
0 1 0 .0 ENTR EXIT
Toggle these buttons to set **DURATION** of this step
EXIT discards the new setting
ENTR accepts the new setting
SETUP X.X 3) DURATION : 10.0 MIN
PREV NEXT INS DEL EDIT EXIT

4.3.2.4. **The PURGE Step**

This step places the T700 into **PURGE** mode.

At the end of the programming sequence, the T700 firmware will automatically insert a **DURATION** step that needs to be defined.

To insert a **PURGE** step into a sequence, press:

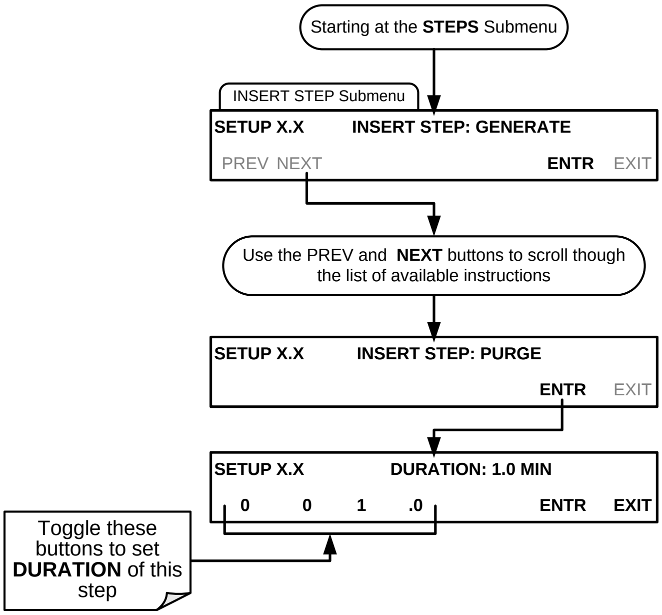
Starting at the **STEPS** Submenu
INSERT STEP Submenu
SETUP X.X INSERT STEP: GENERATE
PREV NEXT ENTR EXIT
Use the PREV and **NEXT** buttons to scroll though the list of available instructions
SETUP X.X INSERT STEP: PURGE
ENTR EXIT
SETUP X.X DURATION: 1.0 MIN
0 0 1 .0 ENTR EXIT
Toggle these buttons to set **DURATION** of this step

4.3.2.5. **The STANDBY Step**

The **STANDBY** step places the T700 into **STANDBY** mode. It is recommended, but not required to follow this with a **DURATION** step.

To insert a **STANDBY** step into a sequence, press:

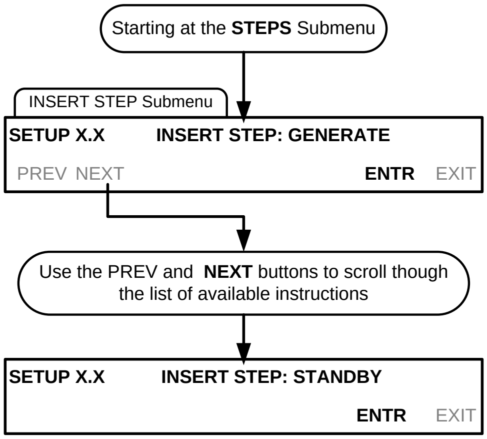
Starting at the **STEPS** Submenu
INSERT STEP Submenu
SETUP X.X INSERT STEP: GENERATE
PREV NEXT ENTR EXIT
Use the PREV and **NEXT** buttons to scroll though the list of available instructions
SETUP X.X INSERT STEP: STANDBY
ENTR EXIT

4.3.2.6. **The DURATION Step**

The duration step causes the T700 to continue performing whatever action was called for by the preceding step of the sequence.

- If that step put the instrument into **STANDBY** mode, the calibrator stays in **STANDBY** mode for the period specified by the **DURATION** step,
- If that step put the instrument into **GENERATE** mode, the will continue to **GENERATE** whatever calibration mixture was programmed into that step for the period specified by the **DURATION** step.

To insert a **DURATION** step into a sequence, press:

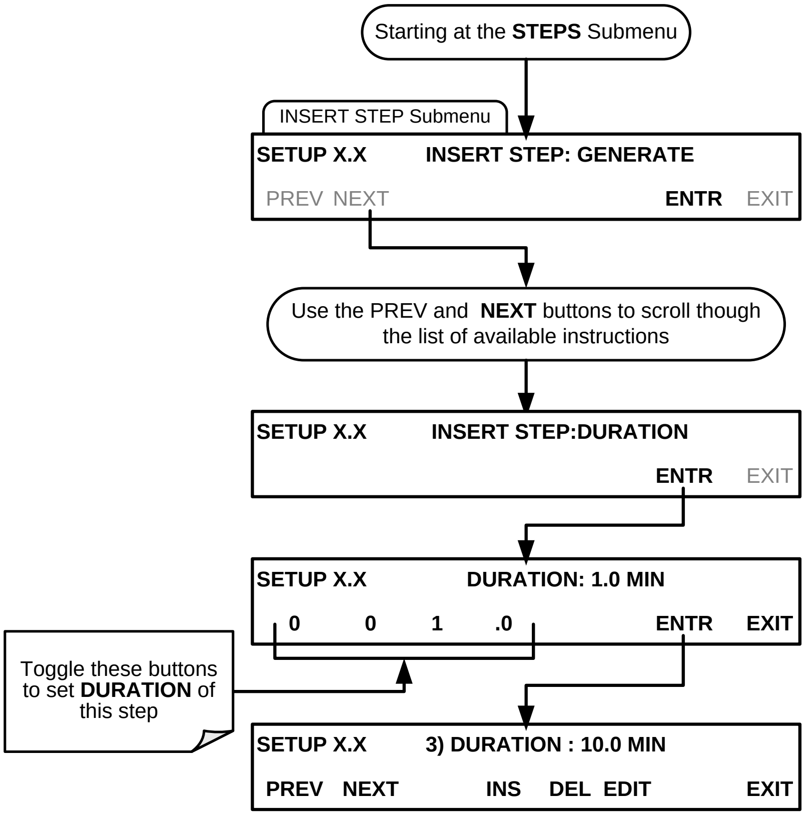
Starting at the STEPS Submenu
INSERT STEP Submenu
SETUP X.X INSERT STEP: GENERATE
PREV NEXT ENTR EXIT
Use the PREV and NEXT buttons to scroll though the list of available instructions
SETUP X.X INSERT STEP:DURATION
ENTR EXIT
SETUP X.X DURATION: 1.0 MIN
0 0 1 .0 ENTR EXIT
Toggle these buttons to set DURATION of this step
SETUP X.X 3) DURATION : 10.0 MIN
PREV NEXT INS DEL EDIT EXIT

4.3.2.7. **The EXECSEQ Step**

The **EXECSEQ** step allows the sequence to call another, already programmed sequence. This is a very powerful tool in that it allows the user to create a “toolbox” of often-used operations that can then be mixed and matched by an overhead sequence.

To insert an **EXECSEQ** step into a sequence, press:

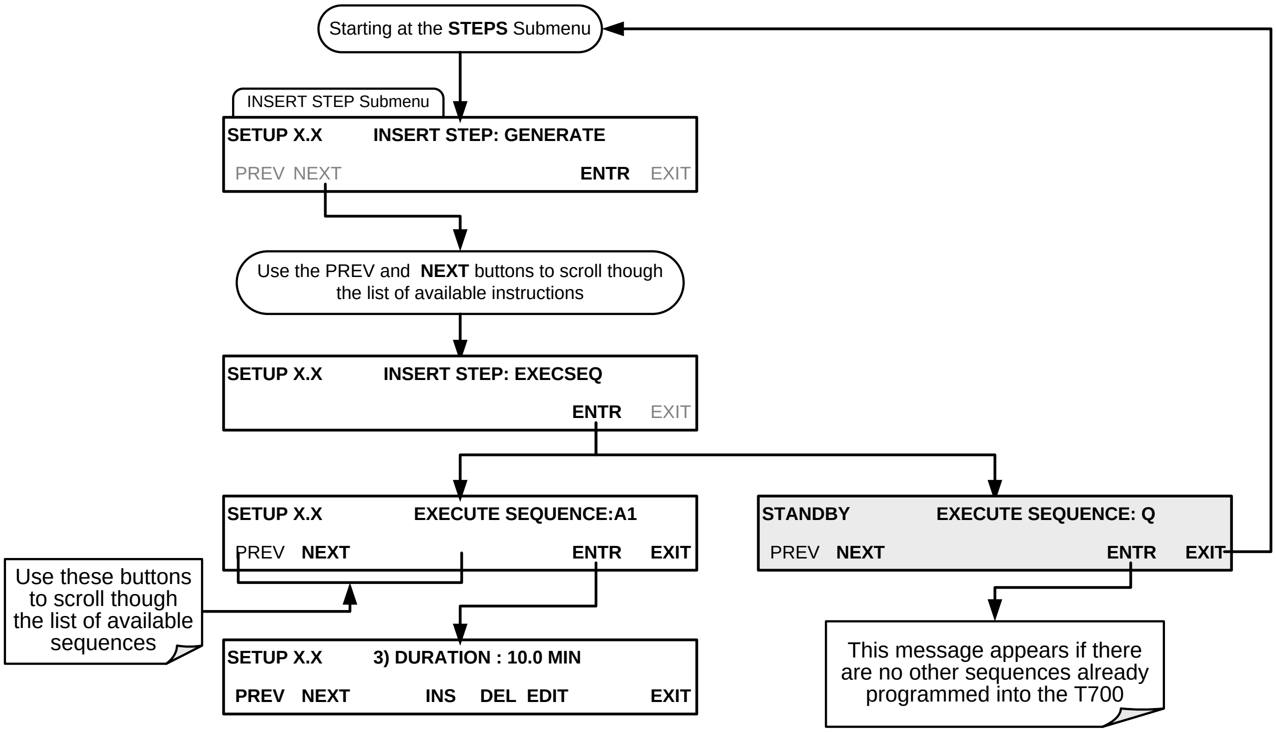
Starting at the STEPS Submenu
INSERT STEP Submenu
SETUP X.X INSERT STEP: GENERATE
PREV NEXT ENTR EXIT
Use the PREV and NEXT buttons to scroll though the list of available instructions
SETUP X.X INSERT STEP: EXECSEQ
ENTR EXIT
SETUP X.X EXECUTE SEQUENCE:A1
PREV NEXT ENTR EXIT
Use these buttons to scroll though the list of available sequences
SETUP X.X 3) DURATION : 10.0 MIN
PREV NEXT INS DEL EDIT EXIT
STANDBY EXECUTE SEQUENCE: Q
PREV NEXT ENTR EXIT
This message appears if there are no other sequences already programmed into the T700

4.3.2.8. **The CC OUTPUT Step**

This instruction causes the sequence to set or reset the T700's digital control outputs. It is very useful in situations where the control outputs are being used to trigger other devices that need to be turned off and on in synch with the operation of the calibrator as it progress through the sequence.

To insert a **CC OUTPUT** step into a sequence, press:

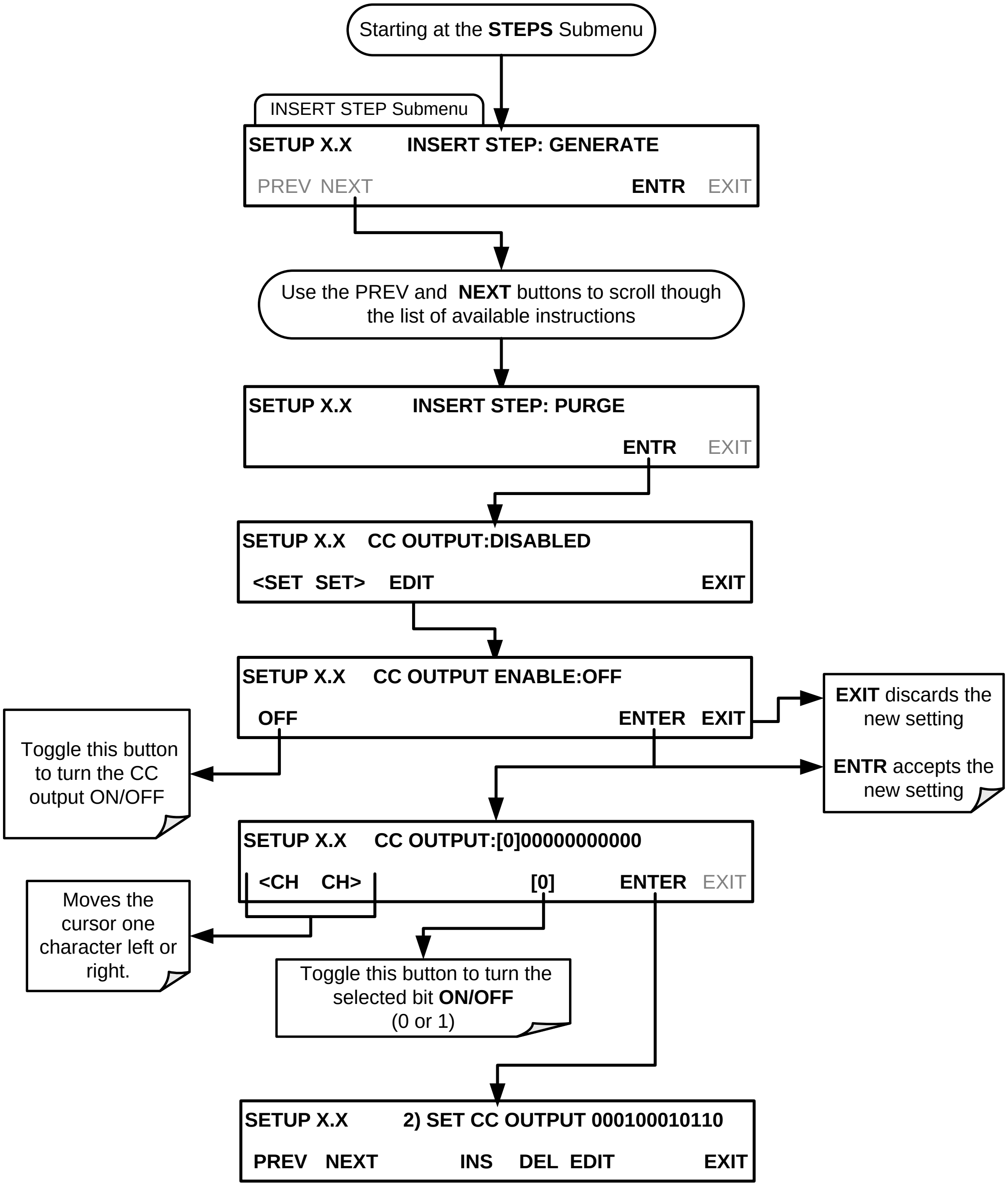

Starting at the **STEPS** Submenu
INSERT STEP Submenu
SETUP X.X INSERT STEP: GENERATE
PREV NEXT ENTR EXIT
Use the PREV and NEXT buttons to scroll though the list of available instructions
SETUP X.X INSERT STEP: PURGE
ENTR EXIT
SETUP X.X CC OUTPUT:DISABLED
<SET SET> EDIT EXIT
SETUP X.X CC OUTPUT ENABLE:OFF
OFF ENTER EXIT
Toggle this button to turn the CC output ON/OFF
EXIT discards the new setting
ENTR accepts the new setting
SETUP X.X CC OUTPUT:[0]00000000000
<CH CH> [0] ENTER EXIT
Moves the cursor one character left or right.
Toggle this button to turn the selected bit **ON/OFF** (0 or 1)
SETUP X.X 2) SET CC OUTPUT 000100010110
PREV NEXT INS DEL EDIT EXIT

4.3.2.9. **The MANUAL Gas Generation Step**

The **MANUAL** step causes the T700 calibrator to enter **MANUAL CALIBRATION MODE**. It is programmed in a similar manner to the calibrator's **GENERATE > MANUAL** function. AT the end of the programming sequence, the T700 firmware will automatically insert a DURATION step that needs to be defined.

To insert a **MANUAL** step into a sequence, press:

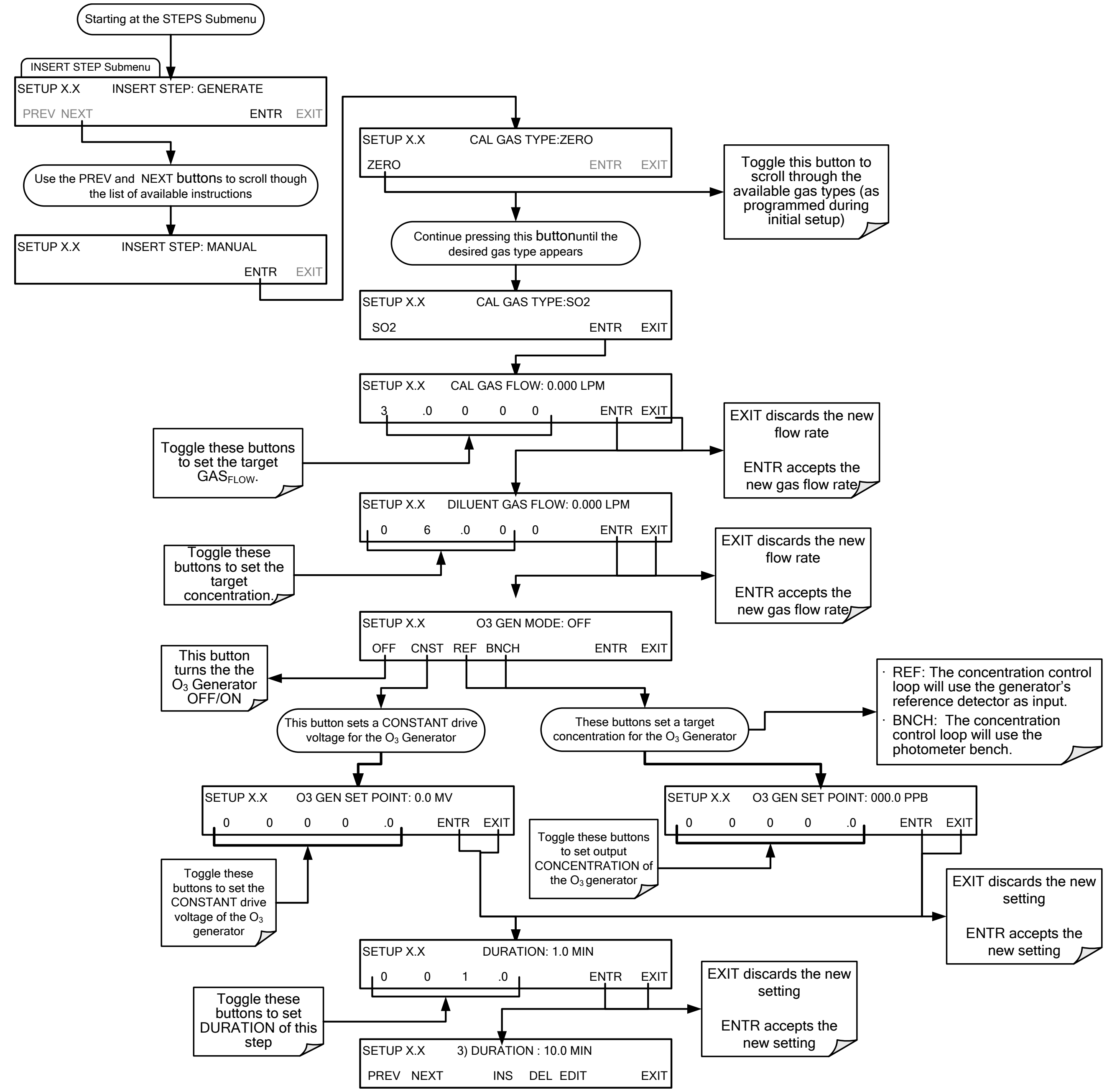
Starting at the STEPS Submenu
INSERT STEP Submenu
SETUP X.X INSERT STEP: GENERATE
PREV NEXT ENTR EXIT
Use the PREV and NEXT buttons to scroll though the list of available instructions
SETUP X.X INSERT STEP: MANUAL
ENTR EXIT
SETUP X.X CAL GAS TYPE:ZERO
ZERO ENTR EXIT
Toggle this button to scroll through the available gas types (as programmed during initial setup)
Continue pressing this buttonuntil the desired gas type appears
SETUP X.X CAL GAS TYPE:SO2
SO2 ENTR EXIT
SETUP X.X CAL GAS FLOW: 0.000 LPM
3 .0 0 0 0 ENTR EXIT
Toggle these buttons to set the target GAS$_{FLOW}$.
EXIT discards the new flow rate
ENTR accepts the new gas flow rate
SETUP X.X DILUENT GAS FLOW: 0.000 LPM
0 6 .0 0 0 ENTR EXIT
Toggle these buttons to set the target concentration.
EXIT discards the new flow rate
ENTR accepts the new gas flow rate
SETUP X.X O3 GEN MODE: OFF
OFF CNST REF BNCH ENTR EXIT
This button turns the the O$_3$ Generator OFF/ON
This button sets a CONSTANT drive voltage for the O$_3$ Generator
These buttons set a target concentration for the O$_3$ Generator
· REF: The concentration control loop will use the generator's reference detector as input.
· BNCH: The concentration control loop will use the photometer bench.
SETUP X.X O3 GEN SET POINT: 0.0 MV
0 0 0 0 .0 ENTR EXIT
Toggle these buttons to set the CONSTANT drive voltage of the O$_3$ generator
Toggle these buttons to set output CONCENTRATION of the O$_3$ generator
SETUP X.X O3 GEN SET POINT: 000.0 PPB
0 0 0 0 .0 ENTR EXIT
EXIT discards the new setting
ENTR accepts the new setting
SETUP X.X DURATION: 1.0 MIN
0 0 1 .0 ENTR EXIT
Toggle these buttons to set DURATION of this step
EXIT discards the new setting
ENTR accepts the new setting
SETUP X.X 3) DURATION : 10.0 MIN
PREV NEXT INS DEL EDIT EXIT

Note **If the user attempts to generate a source gas type that has not been entered into the T700's gas library, the sequence will freeze and after a certain time-out period, stop running.**

4.3.2.10. **Deleting or Editing an Individual Step in a Sequence**

To delete or edit an individual step in an existing Sequence, press:

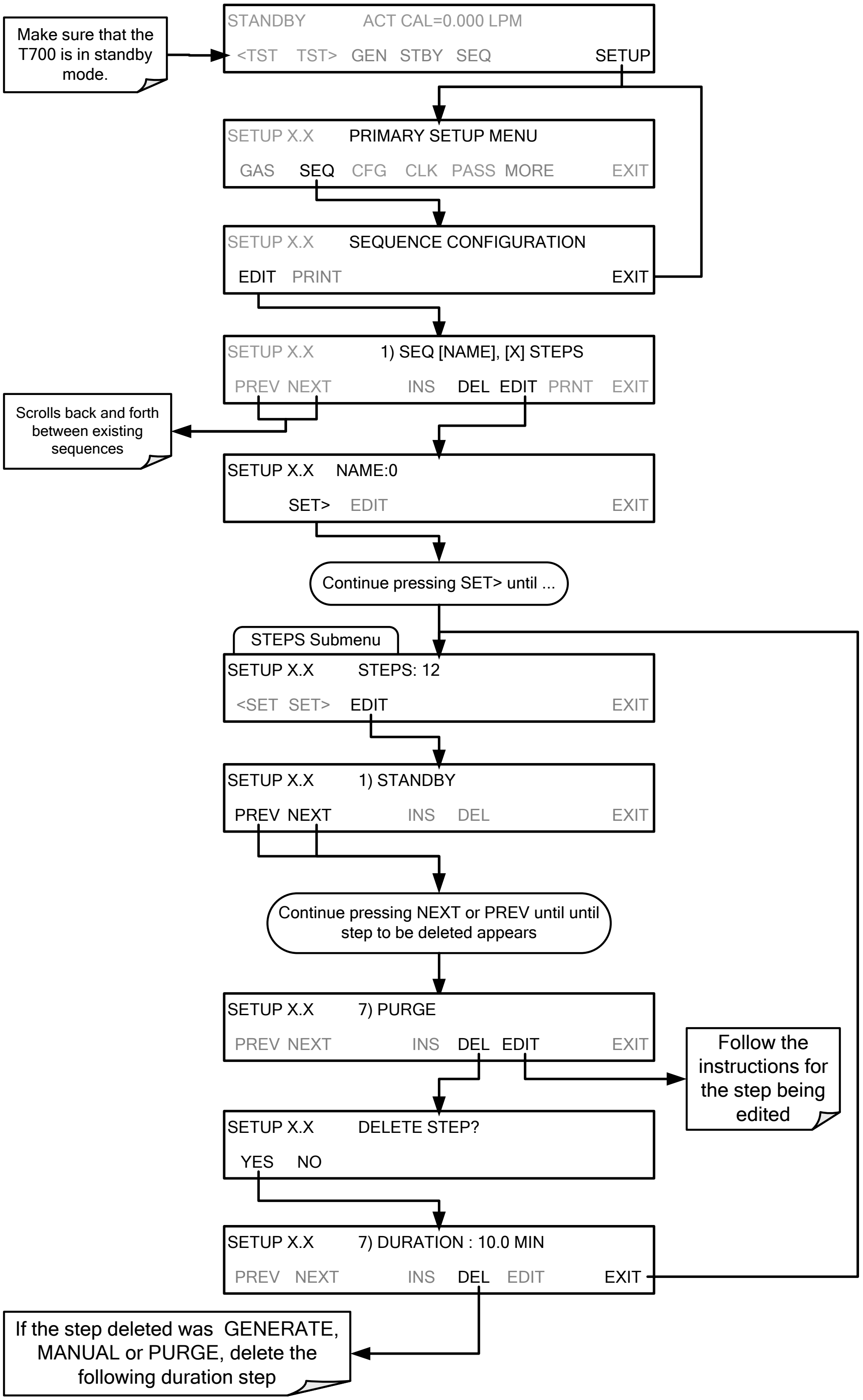
Make sure that the T700 is in standby mode.
STANDBY ACT CAL=0.000 LPM
<TST TST> GEN STBY SEQ SETUP
SETUP X.X PRIMARY SETUP MENU
GAS SEQ CFG CLK PASS MORE EXIT
SETUP X.X SEQUENCE CONFIGURATION
EDIT PRINT EXIT
SETUP X.X 1) SEQ [NAME], [X] STEPS
PREV NEXT INS DEL EDIT PRNT EXIT
Scrolls back and forth between existing sequences
SETUP X.X NAME:0
SET> EDIT EXIT
Continue pressing SET> until ...
STEPS Submenu
SETUP X.X STEPS: 12
<SET SET> EDIT EXIT
SETUP X.X 1) STANDBY
PREV NEXT INS DEL EXIT
Continue pressing NEXT or PREV until until step to be deleted appears
SETUP X.X 7) PURGE
PREV NEXT INS DEL EDIT EXIT
Follow the instructions for the step being edited
SETUP X.X DELETE STEP?
YES NO
SETUP X.X 7) DURATION : 10.0 MIN
PREV NEXT INS DEL EDIT EXIT
If the step deleted was GENERATE, MANUAL or PURGE, delete the following duration step

4.3.3. **DELETING A SEQUENCE**

To delete a sequence from the T700 calibrator's memory, press:

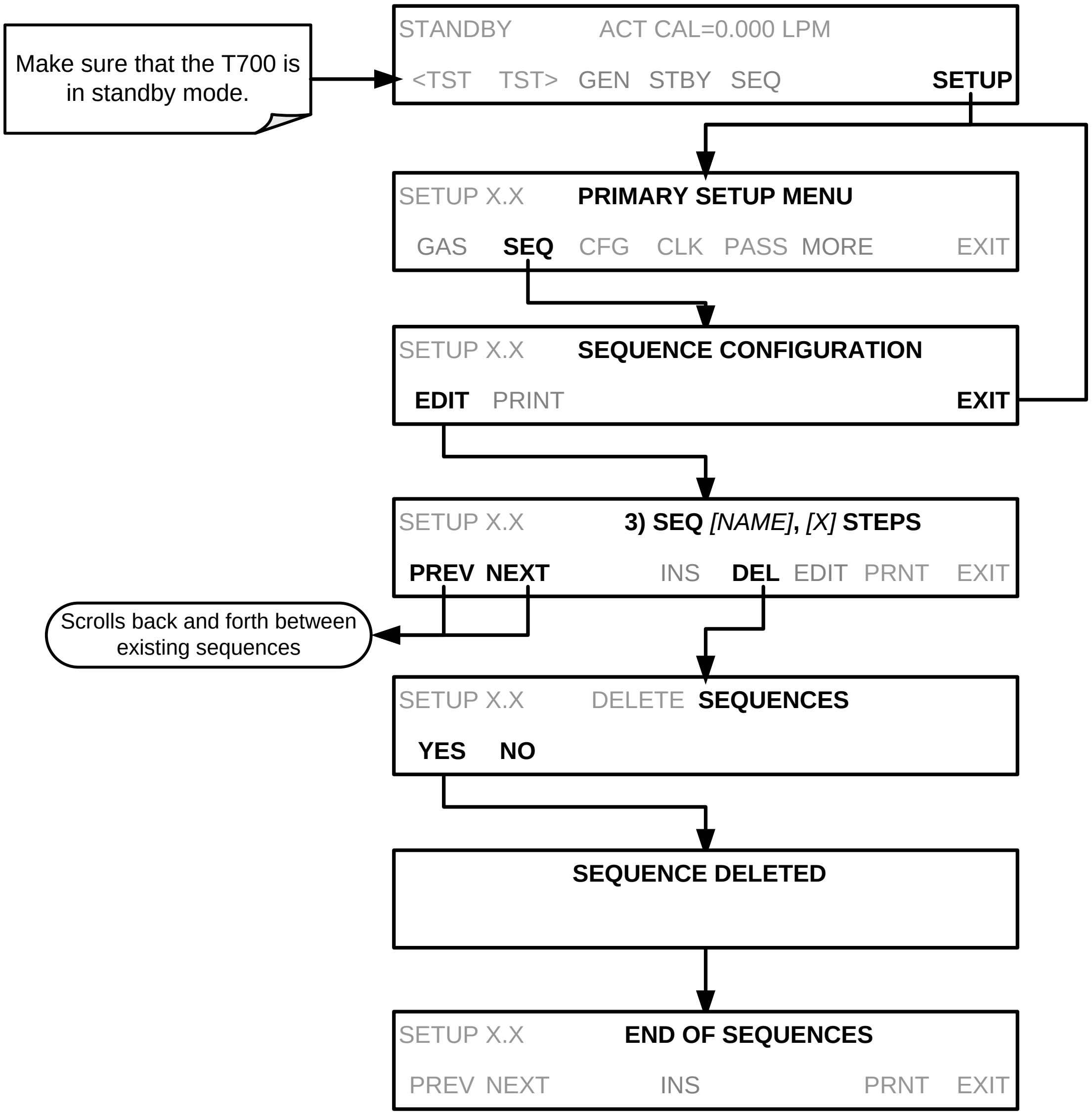
Make sure that the T700 is in standby mode.
STANDBY ACT CAL=0.000 LPM
<TST TST> GEN STBY SEQ SETUP
SETUP X.X PRIMARY SETUP MENU
GAS SEQ CFG CLK PASS MORE EXIT
SETUP X.X SEQUENCE CONFIGURATION
EDIT PRINT EXIT
SETUP X.X 3) SEQ [NAME], [X] STEPS
PREV NEXT INS DEL EDIT PRNT EXIT
Scrolls back and forth between existing sequences
SETUP X.X DELETE SEQUENCES
YES NO
SEQUENCE DELETED
SETUP X.X END OF SEQUENCES
PREV NEXT INS PRNT EXIT

4.4. SETUP > CFG

Pressing the CFG button displays the instrument’s configuration information. This display lists the calibrator model, serial number, firmware revision, software library revision, CPU type and other information.

Use this information to identify the software and hardware when contacting Technical Support.

Special instrument or software features or installed options may also be listed here.

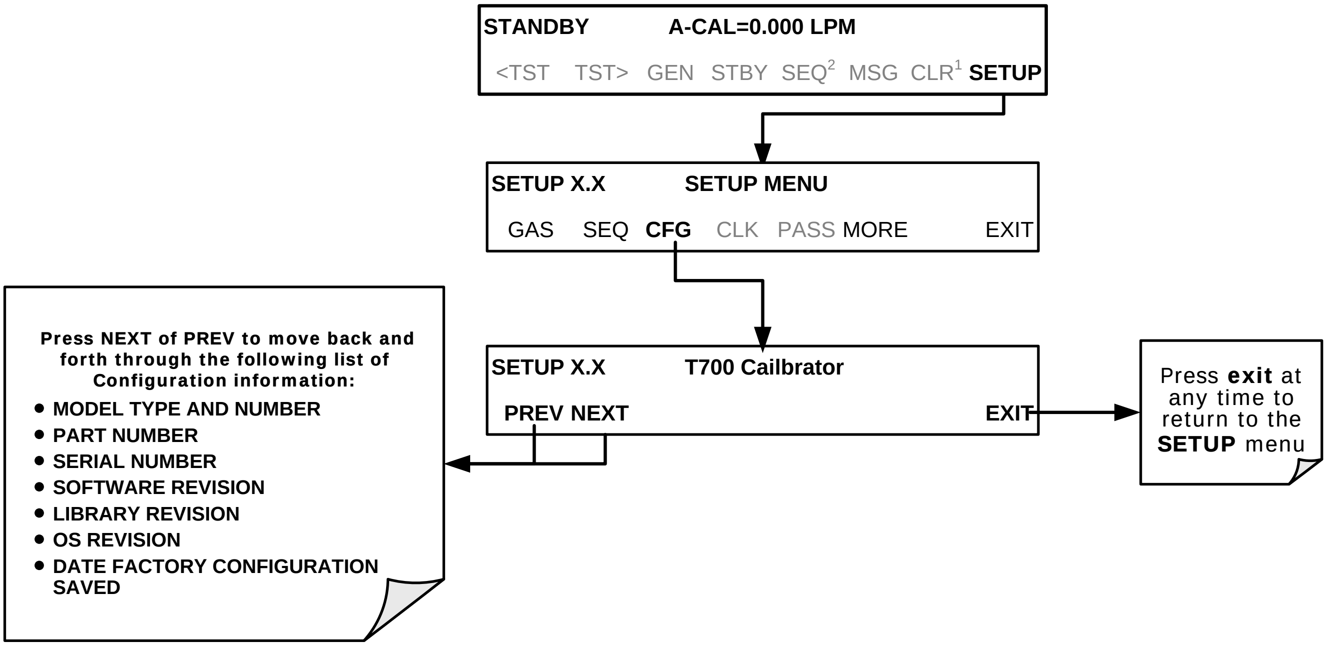
STANDBY A-CAL=0.000 LPM
<TST TST> GEN STBY SEQ^2 MSG CLR^1 SETUP
SETUP X.X SETUP MENU
GAS SEQ CFG CLK PASS MORE EXIT
SETUP X.X T700 Cailbrator
PREV NEXT EXIT
Press NEXT of PREV to move back and forth through the following list of Configuration information:
MODEL TYPE AND NUMBER
PART NUMBER
SERIAL NUMBER
SOFTWARE REVISION
LIBRARY REVISION
OS REVISION
DATE FACTORY CONFIGURATION SAVED
Press exit at any time to return to the SETUP menu

4.5. SETUP > CLK: SETTING THE INTERNAL TIME-OF-DAY CLOCK AND ADJUSTING SPEED

4.5.1. SETTING THE INTERNAL CLOCK’S TIME AND DAY

The T700 has a time of day clock that supports the **DURATION** step of the calibration sequence feature, time of day TEST function, and time stamps on most COMM port messages. To set the clock’s time and day, press:

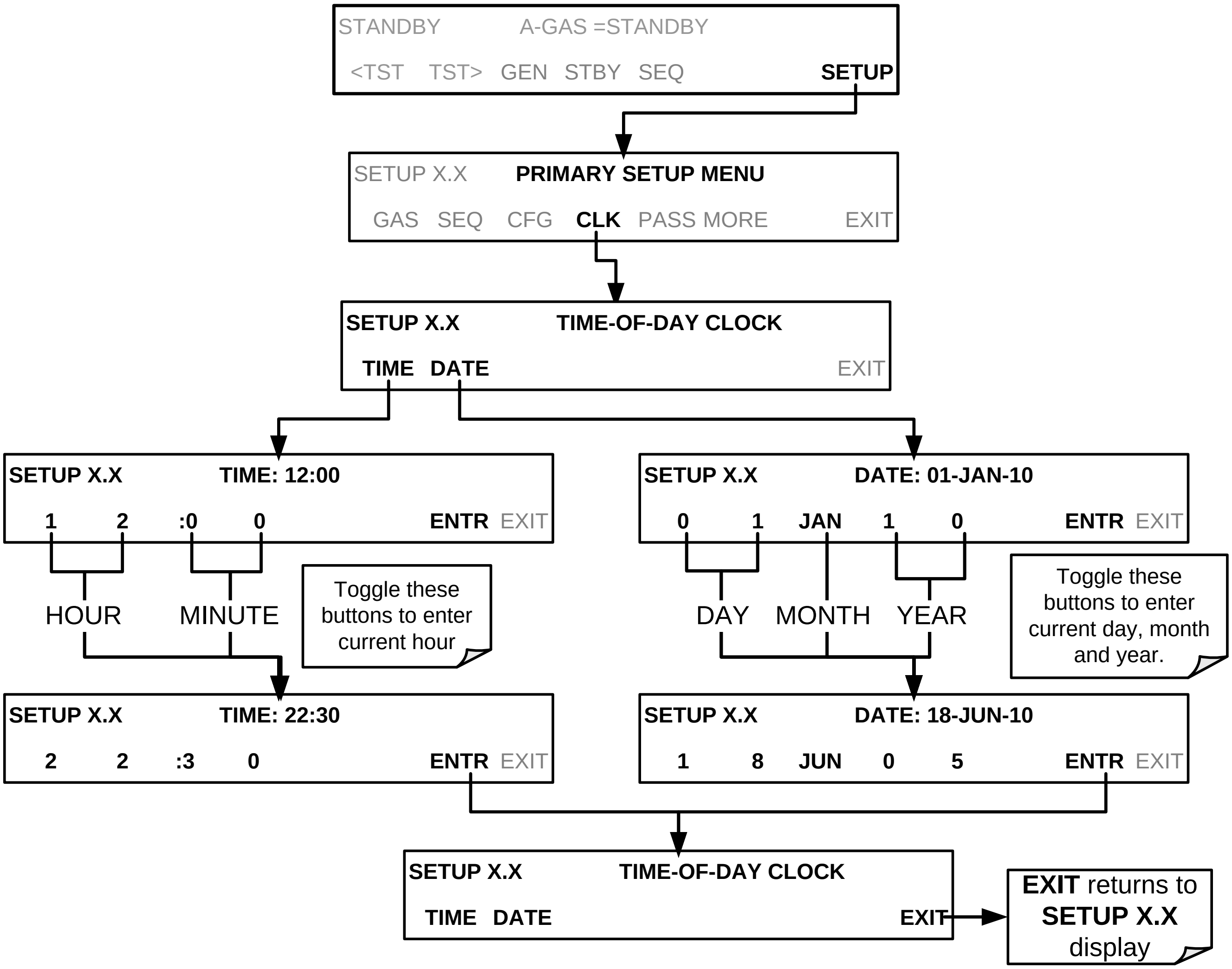
STANDBY A-GAS =STANDBY
<TST TST> GEN STBY SEQ SETUP
SETUP X.X PRIMARY SETUP MENU
GAS SEQ CFG CLK PASS MORE EXIT
SETUP X.X TIME-OF-DAY CLOCK
TIME DATE EXIT
SETUP X.X TIME: 12:00
1 2 :0 0 ENTR EXIT
HOUR
MINUTE
Toggle these buttons to enter current hour
SETUP X.X DATE: 01-JAN-10
0 1 JAN 1 0 ENTR EXIT
DAY
MONTH
YEAR
Toggle these buttons to enter current day, month and year.
SETUP X.X TIME: 22:30
2 2 :3 0 ENTR EXIT
SETUP X.X DATE: 18-JUN-10
1 8 JUN 0 5 ENTR EXIT
SETUP X.X TIME-OF-DAY CLOCK
TIME DATE EXIT
EXIT returns to SETUP X.X display

4.5.2. **ADJUSTING THE INTERNAL CLOCK'S SPEED**

In order to compensate for CPU clocks which run faster or slower, you can adjust a variable called **CLOCK_ADJ** to speed up or slow down the clock by a fixed amount every day. To change this variable, press:

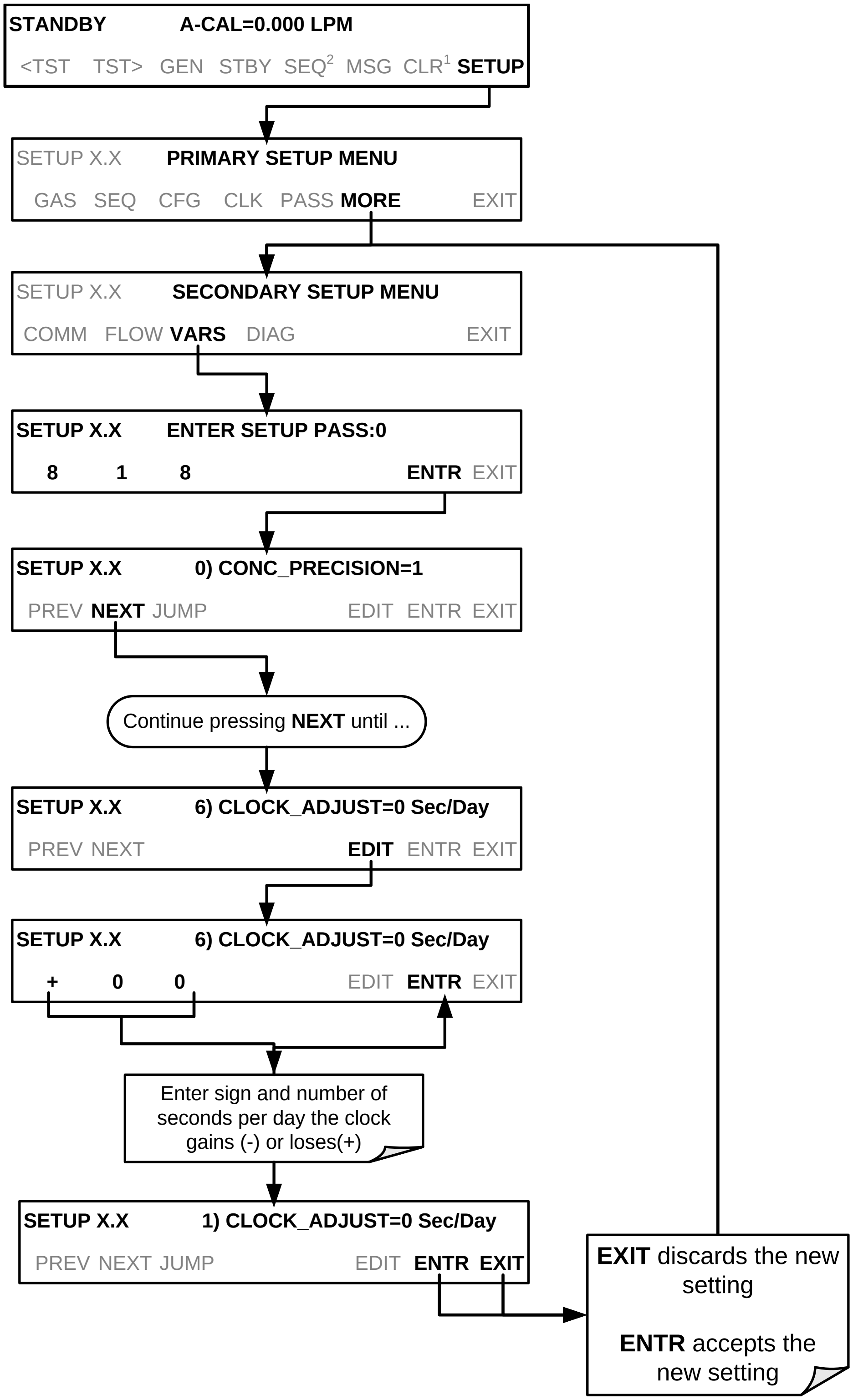
STANDBY A-CAL=0.000 LPM
<TST TST> GEN STBY SEQ^2 MSG CLR^1 SETUP
SETUP X.X PRIMARY SETUP MENU
GAS SEQ CFG CLK PASS MORE EXIT
SETUP X.X SECONDARY SETUP MENU
COMM FLOW VARS DIAG EXIT
SETUP X.X ENTER SETUP PASS:0
8 1 8 ENTR EXIT
SETUP X.X 0) CONC_PRECISION=1
PREV NEXT JUMP EDIT ENTR EXIT
SETUP X.X 6) CLOCK_ADJUST=0 Sec/Day
PREV NEXT EDIT ENTR EXIT
SETUP X.X 6) CLOCK_ADJUST=0 Sec/Day
+ 0 0 EDIT ENTR EXIT
SETUP X.X 1) CLOCK_ADJUST=0 Sec/Day
PREV NEXT JUMP EDIT ENTR EXIT

Continue pressing **NEXT** until ...

Enter sign and number of seconds per day the clock gains (-) or loses(+)

EXIT discards the new setting

ENTR accepts the new setting

4.6. SETUP > PASS

The T700 provides password protection of the calibration and setup functions to prevent unauthorized adjustments. When the passwords have been enabled in the **PASS** menu item, the system will prompt the user for a password anytime a password-protected function is requested.

There are three levels of password protection, which correspond to operator, maintenance and configuration functions. Each level allows access to all of the functions in the previous level.

Table 4-11: Password Levels

PASSWORD	LEVEL	MENU ACCESS ALLOWED
No password	Operator	All functions of the MAIN menu: **TEST, GEN,** initiate **SEQ , MSG, CLR**
101	Maintenance	Access to Primary and Secondary Setup Menus except for **VARS** and **DIAG**
818	Configuration	Secondary SETUP Submenus **VARS** and **DIAG**

To enable or disable passwords, press:

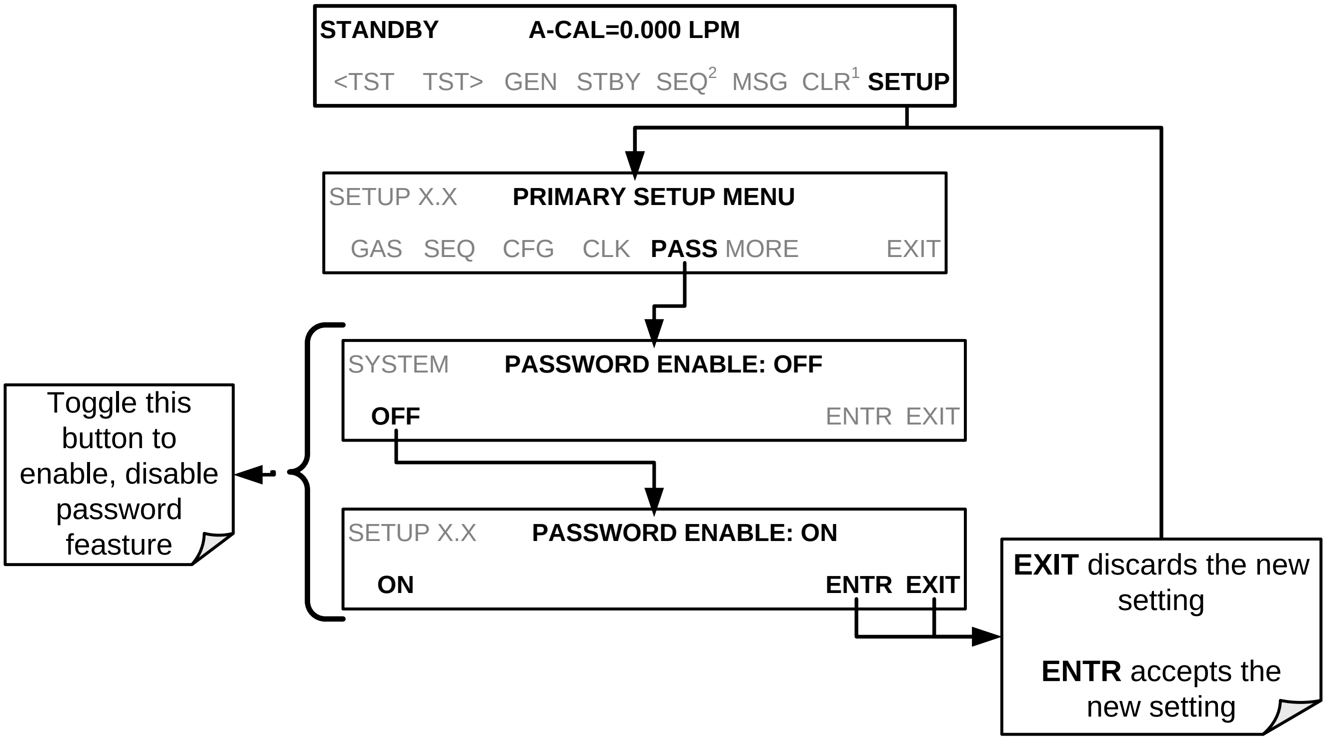
STANDBY A-CAL=0.000 LPM
<TST TST> GEN STBY SEQ^2 MSG CLR^1 SETUP
SETUP X.X PRIMARY SETUP MENU
GAS SEQ CFG CLK PASS MORE EXIT
SYSTEM PASSWORD ENABLE: OFF
OFF ENTR EXIT
SETUP X.X PASSWORD ENABLE: ON
ON ENTR EXIT

Toggle this button to enable, disable password feasture

EXIT discards the new setting

ENTR accepts the new setting

Example: If all passwords are enabled, the following touch screen button sequence would be required to enter the VARS or DIAG submenus:

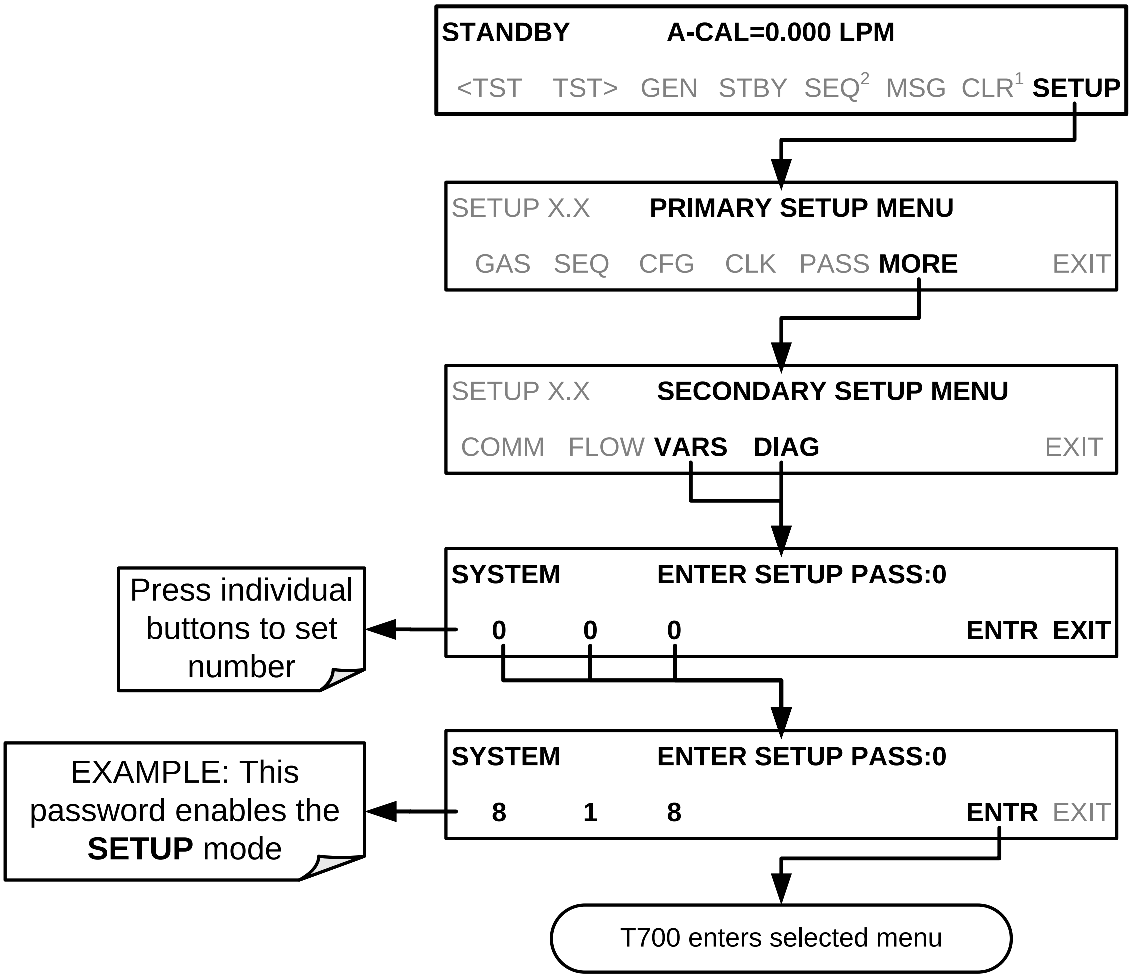
STANDBY A-CAL=0.000 LPM
<TST TST> GEN STBY SEQ2 MSG CLR1 SETUP
SETUP X.X PRIMARY SETUP MENU
GAS SEQ CFG CLK PASS MORE EXIT
SETUP X.X SECONDARY SETUP MENU
COMM FLOW VARS DIAG EXIT
SYSTEM ENTER SETUP PASS:0
0 0 0 ENTR EXIT
SYSTEM ENTER SETUP PASS:0
8 1 8 ENTR EXIT
T700 enters selected menu

Press individual buttons to set number

EXAMPLE: This password enables the **SETUP** mode

Note **The instrument still prompts for a password when entering the VARS and DIAG menus, even when passwords are disabled, but it displays the default password (818) upon entering these menus. Simply press ENTR when this is the case.**

4.7. SETUP > COMM: COMMUNICATIONS PORTS

This section introduces the communications setup menu; Section 5 provides the setup instructions and operation information. Press SETUP>MORE>COMM to arrive at the communications menu.

4.7.1. ID (MACHINE IDENTIFICATION)

Each type of Teledyne API's calibrator is configured with a default ID code. The default ID code for all T700 calibrators is typically **700** (or **0**). The ID number is only important if more than one calibrator is connected to the same communications channel such as when several calibrators are on the same Ethernet LAN (See Section 5.4); in an RS-232 multi-drop chain (See Section3.3.1.7) or operating over a RS-485 network (see Section 5.3). If two calibrators of the same model type are used on one channel, the ID codes of one or both of the instruments need to be changed.

To edit the instrument's ID code, press:

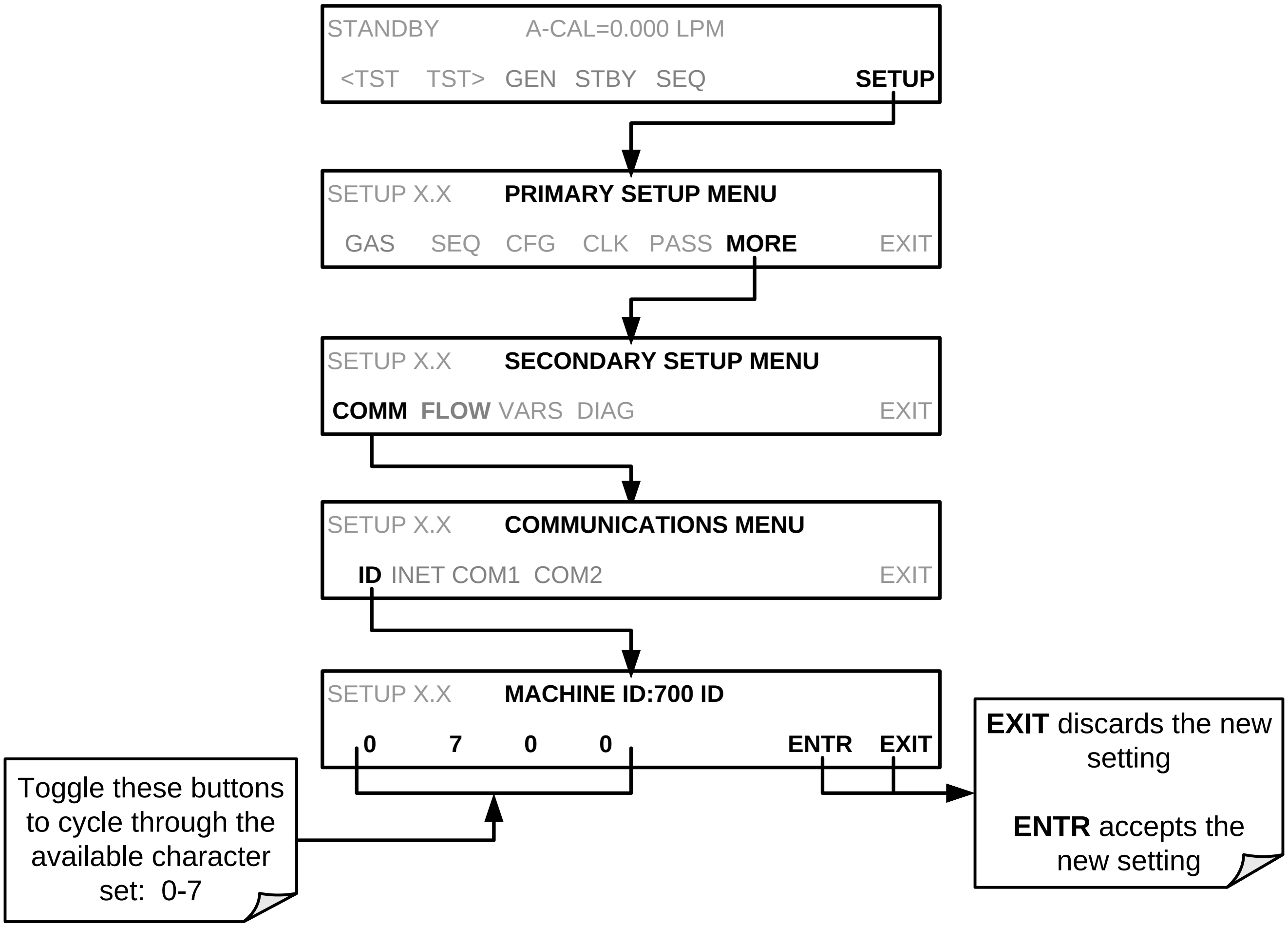
STANDBY A-CAL=0.000 LPM
<TST TST> GEN STBY SEQ SETUP
SETUP X.X PRIMARY SETUP MENU
GAS SEQ CFG CLK PASS MORE EXIT
SETUP X.X SECONDARY SETUP MENU
COMM FLOW VARS DIAG EXIT
SETUP X.X COMMUNICATIONS MENU
ID INET COM1 COM2 EXIT
SETUP X.X MACHINE ID:700 ID
0 7 0 0 ENTR EXIT

Toggle these buttons to cycle through the available character set: 0-7

EXIT discards the new setting

ENTR accepts the new setting

The ID number is only important if more than one calibrator is connected to the same communications channel (e.g., a multi-drop setup). Different models of Teledyne API's calibrators have different default ID numbers, but if two calibrators of the same model type are used on one channel (for example, two T700's), the ID of one instrument needs to be changed.

The ID can also be used for to identify any one of several calibrators attached to the same network but situated in different physical locations.

4.7.2. INET (ETHERNET)

Use SETUP>COMM>INET to configure Ethernet communications, whether manually or via DHCP. Please see Section 5.4 for configuration details.

4.7.3. COM1 AND COM2 (MODE, BAUD RATE AND TEST PORT)

Use the SETUP>COMM>COM1[COM2] menus to:

- configure communication modes (Section 5.2.1)
- view/set the baud rate (Section 5.2.2)
- test the connections of the com ports (Section 5.2.3).

Configuring COM1 or COM2 requires setting the DCE DTE switch on the rear panel. Section 5.1 provides DCE DTE information.

4.8. SETUP > MORE > FLOW

The Flow menu allows you to view the performance statistics for the Mass Flow Controllers (MFCs). See Section 7.1 for more information and details on setting up for MFC flow verification and calibration.

4.9. SETUP > MORE > VARS: INTERNAL VARIABLES (VARS)

The T700 has several user-adjustable software variables, which define certain operational parameters. Usually, these variables are automatically set by the instrument's firmware, but can be manually redefined using the VARS menu.

The following table lists all variables that are available within the 818 password protected level. See Appendix A2 for a detailed listing of all of the T700 variables that are accessible through the remote interface.

Table 4-12: Variable Names (VARS)

NO.	VARIABLE	DESCRIPTION	ALLOWED VALUES	DEFAULT VALUES
0	*PHOTO_LAMP* ^{1,2}	*Sets the photometer lamp temperature set point and warning limits.*	*0ºC and 100ºC*	*58ºC* *Warning limits* *56ºC - 61ºC*
1	*O3_GEN LAMP* ^{1,2}	*Sets the O_3 generator lamp temperature set point and warning limits.*	*0ºC and 100ºC*	*48ºC* *Warning limits* *43ºC - 53ºC*
2	**O3_CONC_RANGE**	Set the upper span point of the O_3 concentration range for TEST CHANNEL analog signal **O3_PHOTO_CONC**.	0.1–20000 ppb	500 ppb

NO.	VARIABLE	DESCRIPTION	ALLOWED VALUES	DEFAULT VALUES
3	**O3_PHOTO_BENCH_ONLY** [2]	O_3 bench control flag. • ON turns on the photometer pump and switches measure/reference valve only when the O_3 mode is set for BNCH (See Section 3.4.8).	ON/OFF	OFF
4	*STD_TEMP* [1]	*Sets the standard Temperature used in calculating O_3 flow rates and concentrations.*	*0ºC and 100ºC*	*25ºC*
5	*STD PRESSURE* [1]	*Sets the standard pressure used in calculating O_3 flow rates and concentrations.*	*15.00 – 50 .00 in-Hg-A*	*29.92 in-Hg-A*
6	**CLOCK_ADJ**	Adjusts the speed of the analyzer's clock. Choose the + sign if the clock is too slow, choose the - sign if the clock is too fast (See Section 4.5).	-60 to +60 s/day Default=0	0

[1] **DO NOT ADJUST OR CHANGE** these values unless instructed to by Teledyne API's Technical Support personnel.

[2] Only available in calibrators with O_3 photometer and generator options installed.

IMPORTANT

IMPACT ON READINGS OR DATA

There is a 2-second latency period between when a VARS value is changed and the new value is stored into the analyzer's memory. DO NOT turn the analyzer off during this period or the new setting will be lost.

To access and navigate the VARS menu, use the following button sequence:

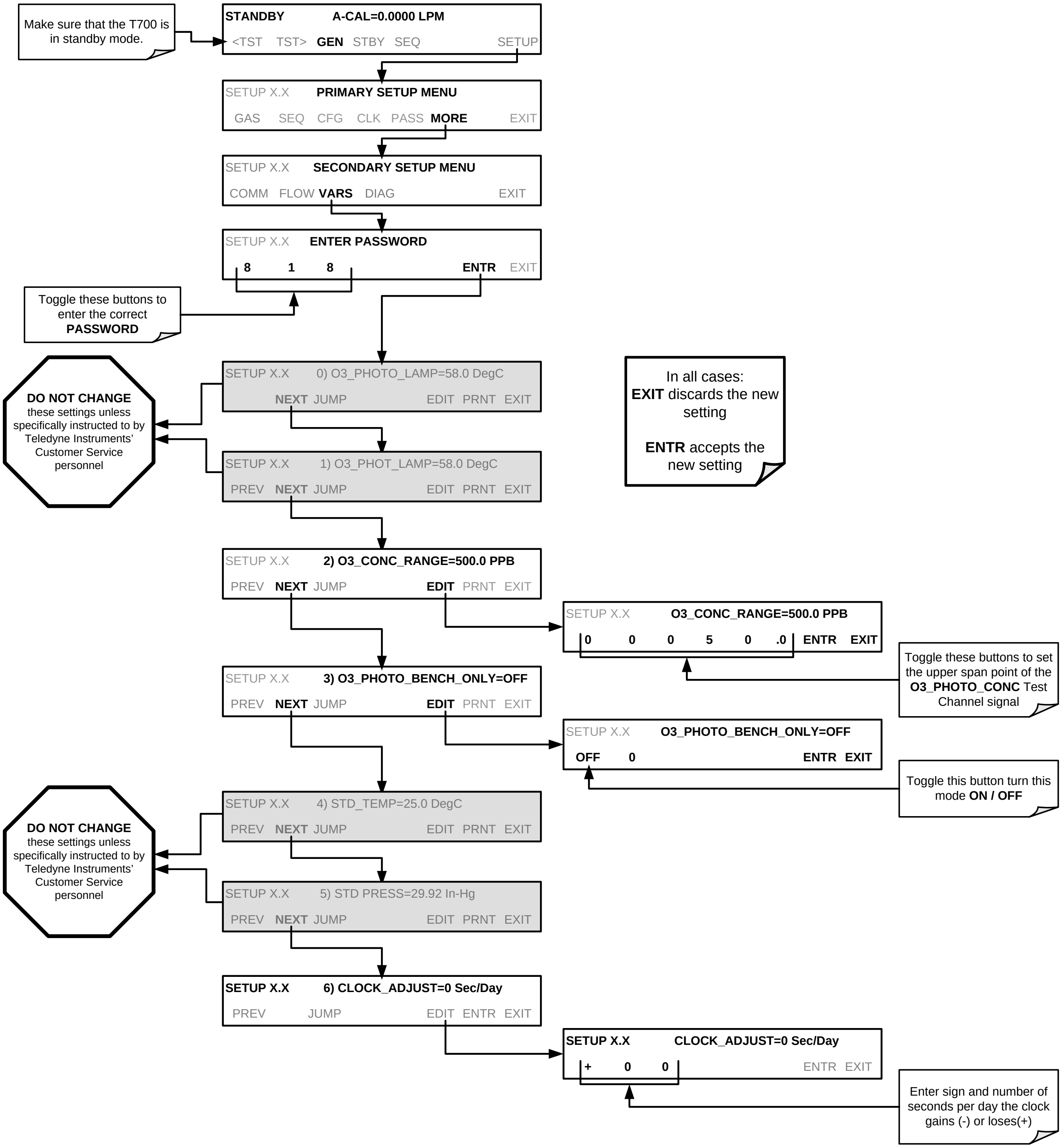
Make sure that the T700 is in standby mode.
STANDBY A-CAL=0.0000 LPM
<TST TST> GEN STBY SEQ SETUP
SETUP X.X PRIMARY SETUP MENU
GAS SEQ CFG CLK PASS MORE EXIT
SETUP X.X SECONDARY SETUP MENU
COMM FLOW VARS DIAG EXIT
SETUP X.X ENTER PASSWORD
8 1 8 ENTR EXIT
Toggle these buttons to enter the correct PASSWORD
SETUP X.X 0) O3_PHOTO_LAMP=58.0 DegC
NEXT JUMP EDIT PRNT EXIT
DO NOT CHANGE these settings unless specifically instructed to by Teledyne Instruments' Customer Service personnel
In all cases: EXIT discards the new setting
ENTR accepts the new setting
SETUP X.X 1) O3_PHOT_LAMP=58.0 DegC
PREV NEXT JUMP EDIT PRNT EXIT
SETUP X.X 2) O3_CONC_RANGE=500.0 PPB
PREV NEXT JUMP EDIT PRNT EXIT
SETUP X.X O3_CONC_RANGE=500.0 PPB
0 0 0 5 0 .0 ENTR EXIT
Toggle these buttons to set the upper span point of the O3_PHOTO_CONC Test Channel signal
SETUP X.X 3) O3_PHOTO_BENCH_ONLY=OFF
PREV NEXT JUMP EDIT PRNT EXIT
SETUP X.X O3_PHOTO_BENCH_ONLY=OFF
OFF 0 ENTR EXIT
Toggle this button turn this mode ON / OFF
SETUP X.X 4) STD_TEMP=25.0 DegC
PREV NEXT JUMP EDIT PRNT EXIT
DO NOT CHANGE these settings unless specifically instructed to by Teledyne Instruments' Customer Service personnel
SETUP X.X 5) STD PRESS=29.92 In-Hg
PREV NEXT JUMP EDIT PRNT EXIT
SETUP X.X 6) CLOCK_ADJUST=0 Sec/Day
PREV JUMP EDIT ENTR EXIT
SETUP X.X CLOCK_ADJUST=0 Sec/Day
+ 0 0 ENTR EXIT
Enter sign and number of seconds per day the clock gains (-) or loses(+)

4.10. SETUP > MORE > DIAG: DIAGNOSTICS FUNCTIONS

A series of diagnostic tools is grouped together under the **SETUP>MORE>DIAG** menu, as these parameters are dependent on firmware revision (see Appendix A). These tools can be used in a variety of troubleshooting and diagnostic procedures and are referred to in many places of the maintenance and troubleshooting sections of this manual (see Sections 9.1 and 9.2).

This section shall focus on the test channel analog output.

4.10.1. TEST CHAN OUTPUT: USING THE TEST CHANNEL ANALOG OUTPUT

The T700 calibrator comes equipped with one analog output. It can be set by the user to carry the current signal level of any one of the parameters listed in Table 4-14 and will output an analog VDC signal that rises and falls in relationship with the value of the parameter.

Pin-outs for the analog output connector at the rear panel of the instrument are:

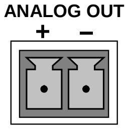

Figure 4-10: T700 the TEST CHANNEL Connector

4.10.1.1. Configuring the Test Channel Analog Output

Table 4-13 lists the analog I/O functions that are available in the T700 calibrator.

Table 4-13: DIAG – Analog I/O Functions

SUB MENU	FUNCTION
AOUTS CALIBRATED:	Shows the status of the analog output calibration (YES/NO) and initiates a calibration of all analog output channels.
MFC_DRIVE_1	**These channels are used by the T700 calibrator internally as drive voltages for instruments with analog MFCs.** **DO NOT alter the settings for these channels.**
MFC_DRIVE_2	
MFC_DRIVE_3 (OPTIONAL)	
TEST OUTPUT	Configures the analog output: **RANGE**[1]: Selects the signal type (voltage or current loop) and full-scale value of the output. **OVERRANGE:** Turns the ± 5% over-range feature ON/OFF for this output channel. **REC_OFS**[1]: Sets a voltage offset (not available when **RANGE** is set to **CURR**ent loop. **AUTO_CAL**[1]: Sets the channel for automatic or manual calibration **CALIBRATED**[1]**:** Performs the same calibration as **AOUT CALIBRATED**, but on this one channel only.
AIN CALIBRATED	Shows the calibration status (YES/NO) and initiates a calibration of the analog to digital converter circuit on the motherboard.
[1]Changes to **RANGE** or **REC_OFS** require recalibration of this output.	

To configure the calibrator's **TEST CHANNEL**, set the electronic signal type of each channel and calibrate the outputs. This consists of:

- Choosing a Test Channel function to be output on the channel (Table 4-14).
- Selecting a signal level that matches the input requirements of the recording device attached to the channel (Section 4.10.1.3).
- Determining if the over-range feature is needed and turn it on or off accordingly (Section 4.10.1.4).
- Adding a bipolar recorder offset to the signal if required (Section 4.10.1.5).
- Calibrating the output channel. This can be done automatically or manually for each channel (Section 4.10.1.6).

To access the analog I/O configuration sub menu, press:

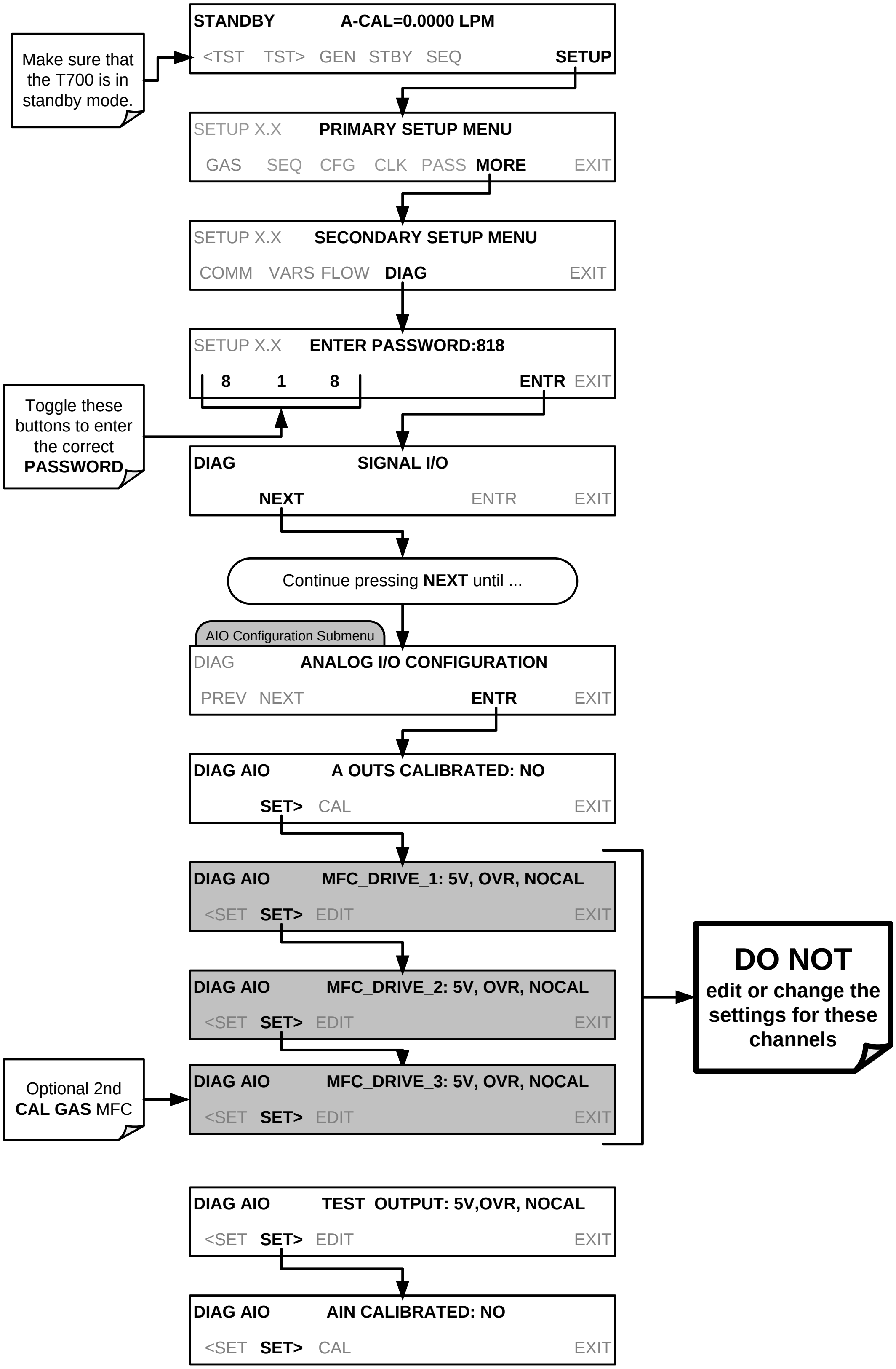
Make sure that the T700 is in standby mode.
STANDBY A-CAL=0.0000 LPM
<TST TST> GEN STBY SEQ SETUP
SETUP X.X PRIMARY SETUP MENU
GAS SEQ CFG CLK PASS MORE EXIT
SETUP X.X SECONDARY SETUP MENU
COMM VARS FLOW DIAG EXIT
SETUP X.X ENTER PASSWORD:818
8 1 8 ENTR EXIT
Toggle these buttons to enter the correct PASSWORD
DIAG SIGNAL I/O
NEXT ENTR EXIT
Continue pressing NEXT until ...
AIO Configuration Submenu
DIAG ANALOG I/O CONFIGURATION
PREV NEXT ENTR EXIT
DIAG AIO A OUTS CALIBRATED: NO
SET> CAL EXIT
DIAG AIO MFC_DRIVE_1: 5V, OVR, NOCAL
<SET SET> EDIT EXIT
DIAG AIO MFC_DRIVE_2: 5V, OVR, NOCAL
<SET SET> EDIT EXIT
DIAG AIO MFC_DRIVE_3: 5V, OVR, NOCAL
<SET SET> EDIT EXIT
Optional 2nd CAL GAS MFC
DO NOT edit or change the settings for these channels
DIAG AIO TEST_OUTPUT: 5V,OVR, NOCAL
<SET SET> EDIT EXIT
DIAG AIO AIN CALIBRATED: NO
<SET SET> CAL EXIT

4.10.1.2. **Selecting a Test Channel Function to Output**

The Test Functions available to be reported are listed on Table 4-14:

Table 4-14: Test Channels Functions available on the T700's Analog Output

TEST CHANNEL	DESCRIPTION	ZERO	FULL SCALE
NONE	**TEST CHANNEL IS TURNED OFF**		
O3 PHOTO MEAS	The raw output of the photometer during its measure cycle	0 mV	5000 mV
O3 PHOTO REF	The raw output of the photometer during its reference cycle	0 mV	5000 mV
REGULATOR PRESSURE	The gas pressure of the pressure regulator on the O3 generator supply line	PSIG	PSIG
SAMPLE PRESSURE	The pressure of gas in the photometer absorption tube	0" Hg-In-A	40" Hg-In-A
SAMPLE FLOW	The gas flow rate through the photometer	0 cm^3/min	1000 cm^3/min
SAMPLE TEMP	The temperature of gas in the photometer absorption tube	0 C°	70 C°
PHOTO LAMP TEMP	The temperature of the photometer UV lamp	0 C°	70 C°
O3 LAMP TEMP	The temperature of the O_3 generator's UV lamp	0 mV	5000 mV
CHASSIS TEMP	The temperature inside the T700's chassis (same as **BOX TEMP**)	0 C°	70 C°
O3 PHOTO CONC	The current concentration of O_3 being measured by the photometer.	0 PPM	1 ppm

Once a function is selected, the instrument not only begins to output a signal on the analog output, but also adds **TEST** to the list of Test Functions viewable via the Front Panel Display.

To activate the **TEST** Channel and select a function press:

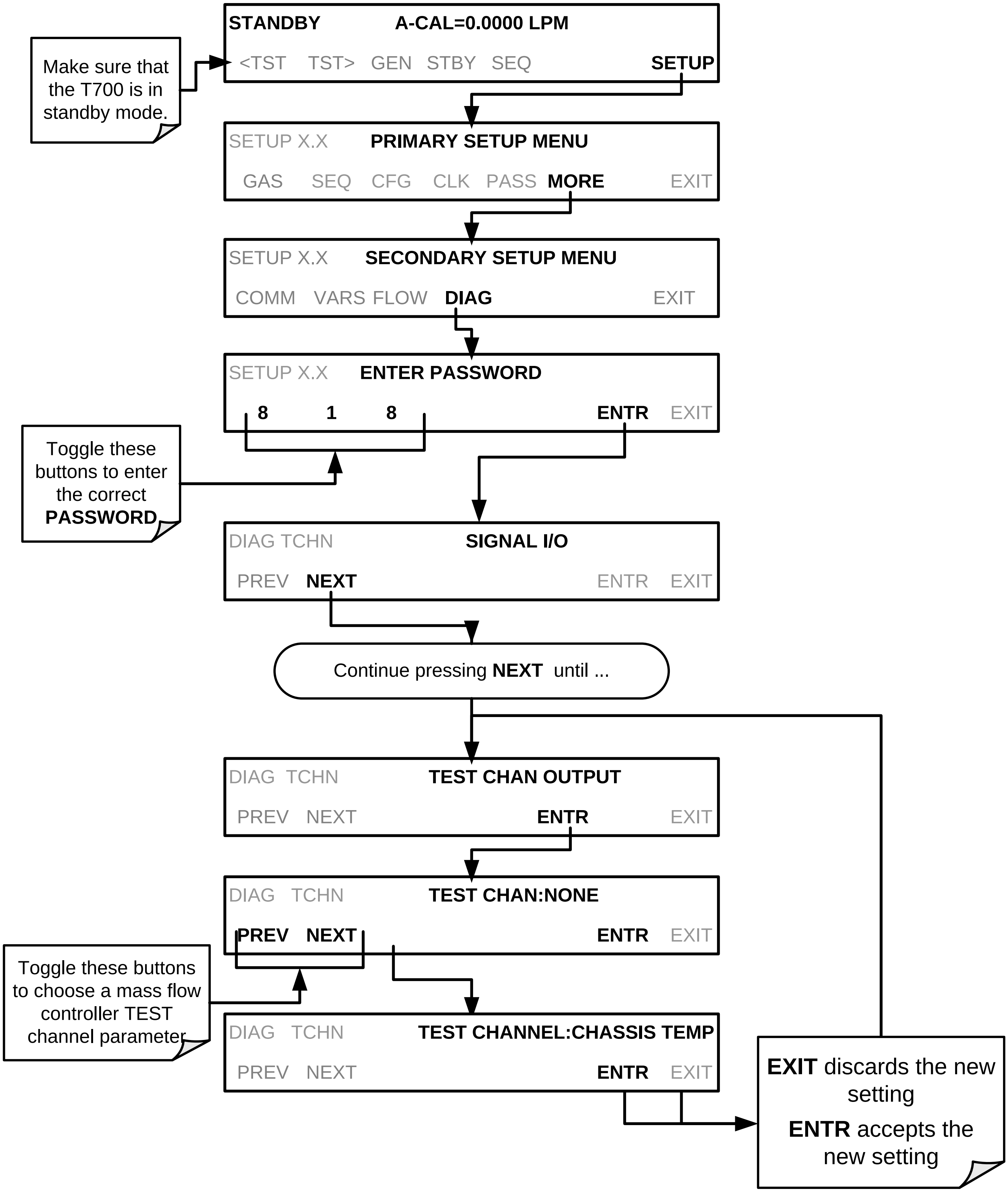
STANDBY A-CAL=0.0000 LPM
<TST TST> GEN STBY SEQ SETUP
SETUP X.X PRIMARY SETUP MENU
GAS SEQ CFG CLK PASS MORE EXIT
SETUP X.X SECONDARY SETUP MENU
COMM VARS FLOW DIAG EXIT
SETUP X.X ENTER PASSWORD
8 1 8 ENTR EXIT
DIAG TCHN SIGNAL I/O
PREV NEXT ENTR EXIT
Continue pressing NEXT until ...
DIAG TCHN TEST CHAN OUTPUT
PREV NEXT ENTR EXIT
DIAG TCHN TEST CHAN:NONE
PREV NEXT ENTR EXIT
DIAG TCHN TEST CHANNEL:CHASSIS TEMP
PREV NEXT ENTR EXIT

Make sure that the T700 is in standby mode.

Toggle these buttons to enter the correct **PASSWORD**

Toggle these buttons to choose a mass flow controller TEST channel parameter

EXIT discards the new setting

ENTR accepts the new setting

4.10.1.3. **Test Channel Voltage Range Configuration**

In its standard configuration, the analog outputs is set to output a 0 – 5 VDC signals. Several other output ranges are available (see Table 4-15). Each range is usable from -5% to + 5% of the rated span.

Table 4-15: Analog Output Voltage Range Min/Max

RANGE SPAN	MINIMUM OUTPUT	MAXIMUM OUTPUT
0-100 mVDC	-5 mVDC	105 mVDC
0-1 VDC	-0.05 VDC	1.05 VDC
0-5 VDC	-0.25 VDC	5.25 VDC
0-10 VDC	-0.5 VDC	10.5 VDC
The default offset for all ranges is 0 VDC.		

To change the output range, press:

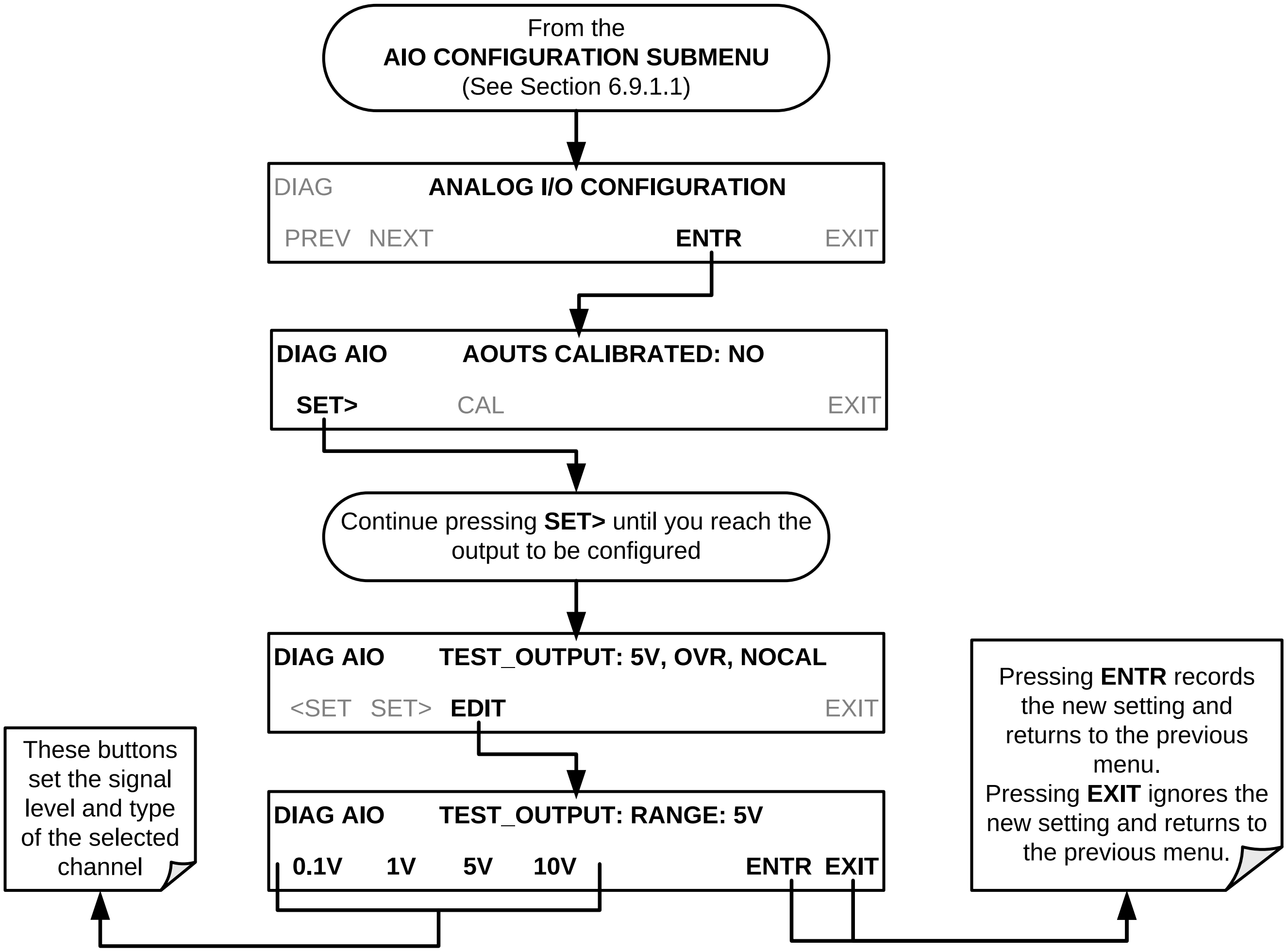

From the **AIO CONFIGURATION SUBMENU** (See Section 6.9.1.1)

DIAG ANALOG I/O CONFIGURATION
PREV NEXT ENTR EXIT
DIAG AIO AOUTS CALIBRATED: NO
SET> CAL EXIT

Continue pressing **SET>** until you reach the output to be configured

DIAG AIO TEST_OUTPUT: 5V, OVR, NOCAL
<SET SET> EDIT EXIT
DIAG AIO TEST_OUTPUT: RANGE: 5V
0.1V 1V 5V 10V ENTR EXIT

These buttons set the signal level and type of the selected channel

Pressing **ENTR** records the new setting and returns to the previous menu.
Pressing **EXIT** ignores the new setting and returns to the previous menu.

4.10.1.4. **Turning the Test Channel Over-Range Feature ON/OFF**

In its default configuration, a ± 5% over-range is available on each of the T700's **TEST CHANNEL** output. This over-range can be disabled if your recording device is sensitive to excess voltage or current.

To turn the over-range feature on or off, press:

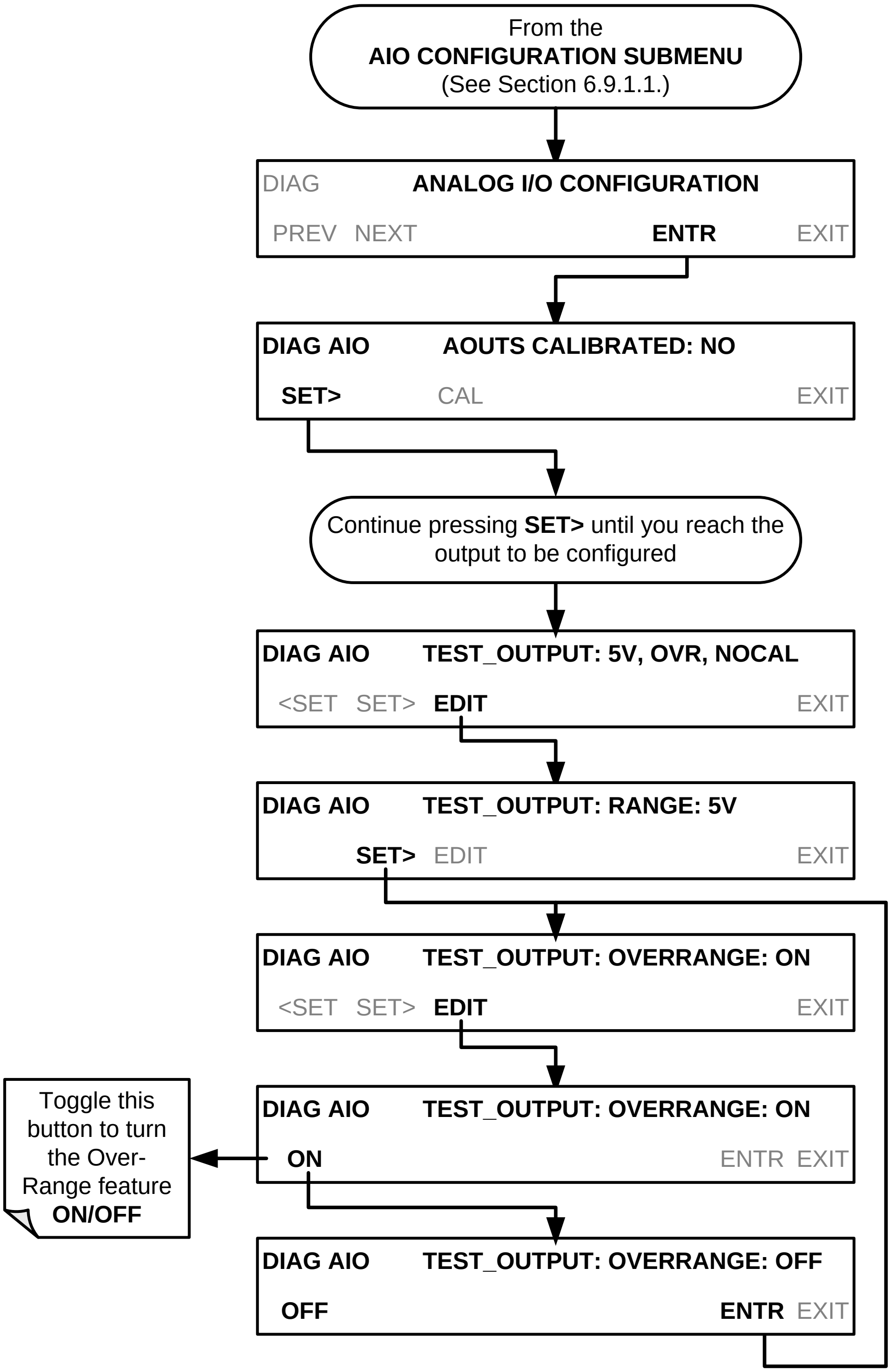
From the
AIO CONFIGURATION SUBMENU
(See Section 6.9.1.1.)
DIAG ANALOG I/O CONFIGURATION
PREV NEXT ENTR EXIT
DIAG AIO AOUTS CALIBRATED: NO
SET> CAL EXIT
Continue pressing SET> until you reach the output to be configured
DIAG AIO TEST_OUTPUT: 5V, OVR, NOCAL
<SET SET> EDIT EXIT
DIAG AIO TEST_OUTPUT: RANGE: 5V
SET> EDIT EXIT
DIAG AIO TEST_OUTPUT: OVERRANGE: ON
<SET SET> EDIT EXIT
DIAG AIO TEST_OUTPUT: OVERRANGE: ON
ON ENTR EXIT
DIAG AIO TEST_OUTPUT: OVERRANGE: OFF
OFF ENTR EXIT
Toggle this button to turn the Over-Range feature ON/OFF

4.10.1.5. **Adding a Recorder Offset to the Test Channel**

Some analog signal recorders require that the zero signal is significantly different from the baseline of the recorder in order to record slightly negative readings from noise around the zero point. This can be achieved in the T700 by defining a zero offset, a small voltage (e.g., 10% of span).

To add a zero offset to a specific analog output channel, press:

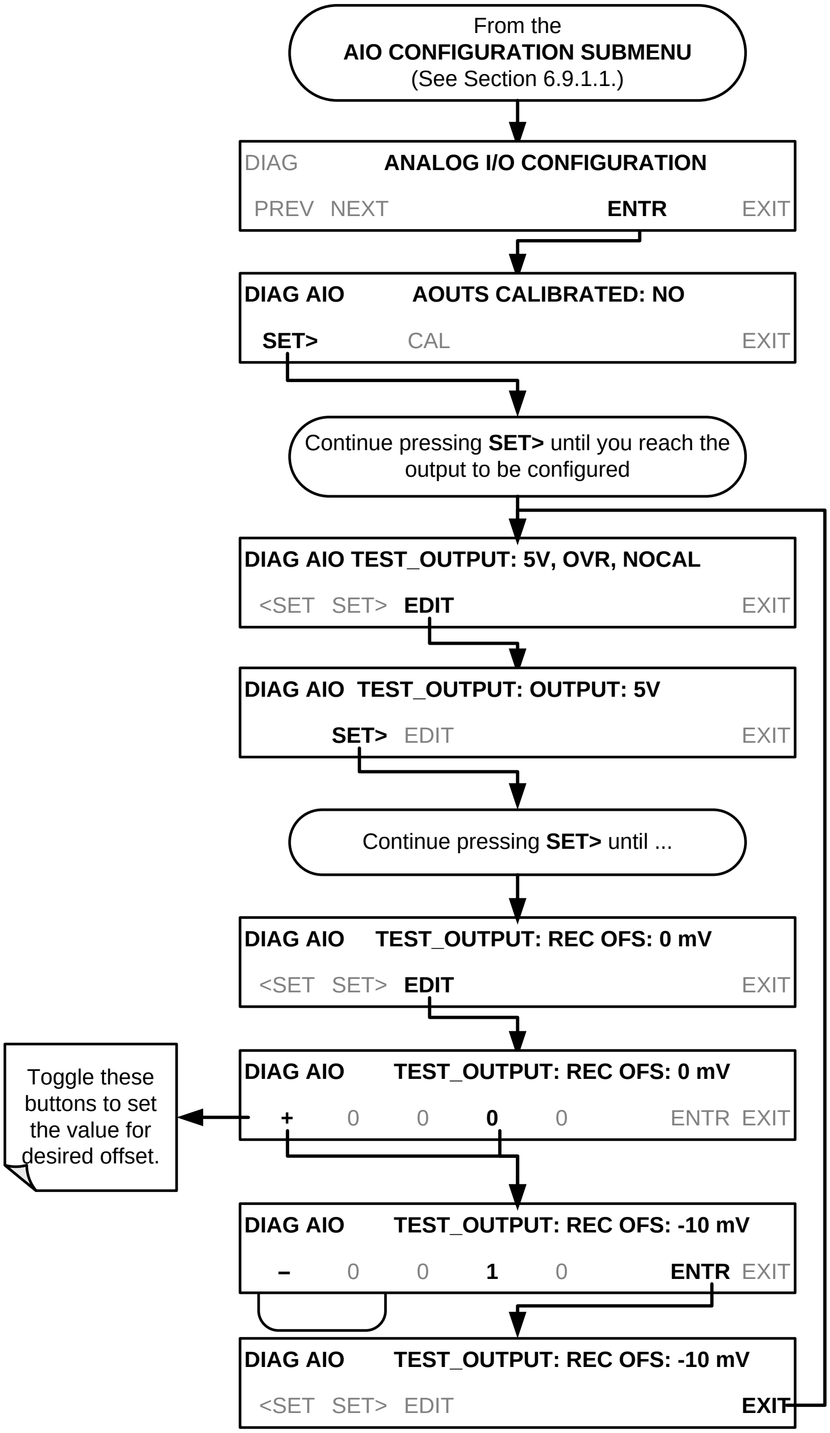
From the
AIO CONFIGURATION SUBMENU
(See Section 6.9.1.1.)
DIAG ANALOG I/O CONFIGURATION
PREV NEXT ENTR EXIT
DIAG AIO AOUTS CALIBRATED: NO
SET> CAL EXIT
Continue pressing SET> until you reach the output to be configured
DIAG AIO TEST_OUTPUT: 5V, OVR, NOCAL
<SET SET> EDIT EXIT
DIAG AIO TEST_OUTPUT: OUTPUT: 5V
SET> EDIT EXIT
Continue pressing SET> until ...
DIAG AIO TEST_OUTPUT: REC OFS: 0 mV
<SET SET> EDIT EXIT
DIAG AIO TEST_OUTPUT: REC OFS: 0 mV
+ 0 0 0 0 ENTR EXIT
Toggle these buttons to set the value for desired offset.
DIAG AIO TEST_OUTPUT: REC OFS: -10 mV
– 0 0 1 0 ENTR EXIT
DIAG AIO TEST_OUTPUT: REC OFS: -10 mV
<SET SET> EDIT EXIT

4.10.1.6. **Test Channel Calibration**

TEST CHANNEL calibration needs to be carried out on first startup of the calibrator (performed in the factory as part of the configuration process) or whenever recalibration is required. The analog outputs can be calibrated automatically or adjusted manually.

In its default mode, the instrument is configured for automatic calibration of all channels, which is useful for clearing any analog calibration warnings associated with channels that will not be used or connected to any input or recording device, e.g., data logger.

Manual calibration should be used for the 0.1V range or in cases where the outputs must be closely matched to the characteristics of the recording device. Manual calibration requires the AUTOCAL feature to be disabled.

ENABLING OR DISABLING THE TEST CHANNEL AUTOCAL FEATURE

To enable or disable the AUTOCAL feature for the **TEST CHANNEL**, press:

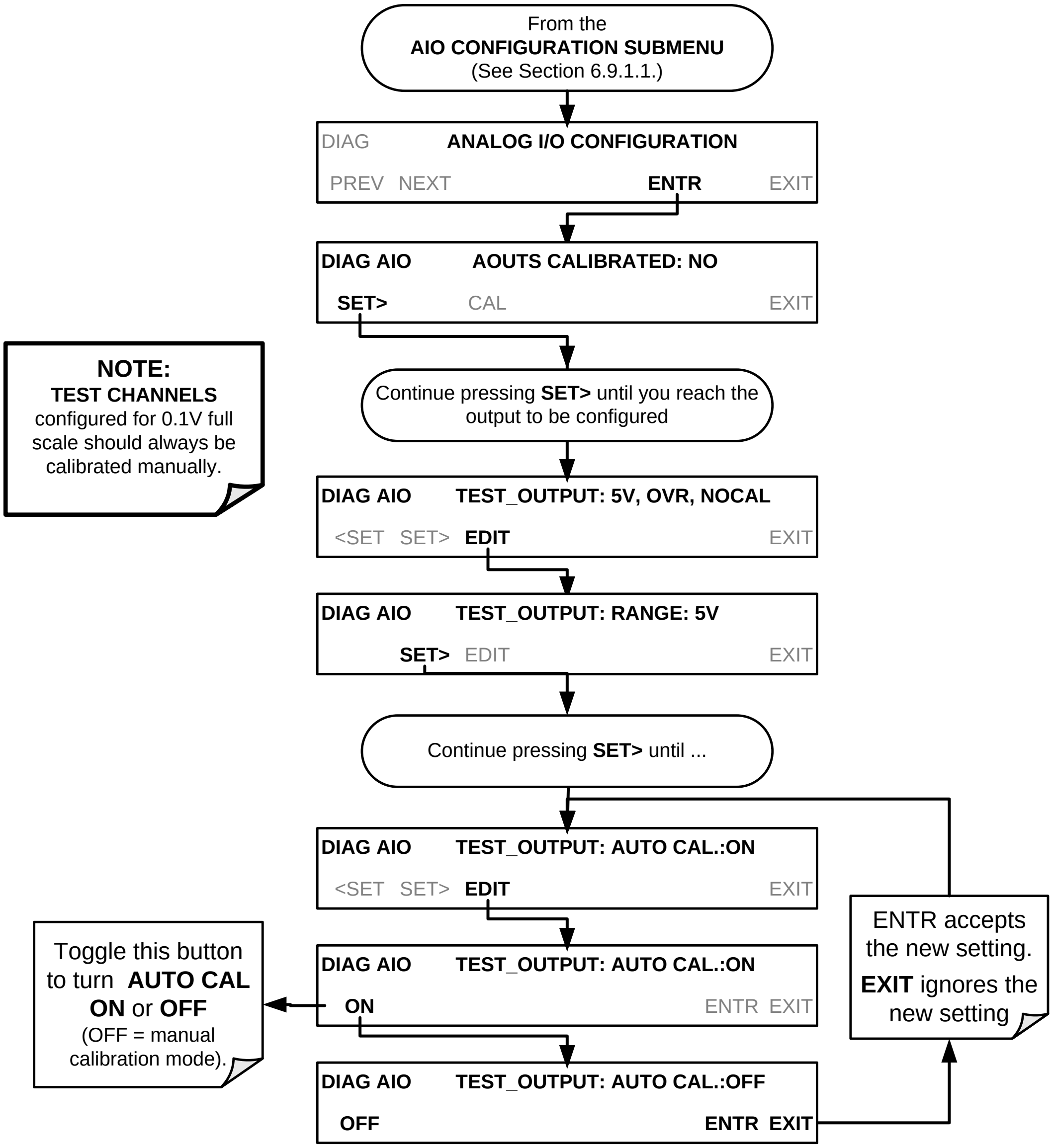
From the
AIO CONFIGURATION SUBMENU
(See Section 6.9.1.1.)
DIAG ANALOG I/O CONFIGURATION
PREV NEXT ENTR EXIT
DIAG AIO AOUTS CALIBRATED: NO
SET> CAL EXIT
NOTE:
TEST CHANNELS
configured for 0.1V full scale should always be calibrated manually.
Continue pressing SET> until you reach the output to be configured
DIAG AIO TEST_OUTPUT: 5V, OVR, NOCAL
<SET SET> EDIT EXIT
DIAG AIO TEST_OUTPUT: RANGE: 5V
SET> EDIT EXIT
Continue pressing SET> until ...
DIAG AIO TEST_OUTPUT: AUTO CAL.:ON
<SET SET> EDIT EXIT
DIAG AIO TEST_OUTPUT: AUTO CAL.:ON
ON ENTR EXIT
Toggle this button to turn AUTO CAL ON or OFF
(OFF = manual calibration mode).
ENTR accepts the new setting.
EXIT ignores the new setting
DIAG AIO TEST_OUTPUT: AUTO CAL.:OFF
OFF ENTR EXIT

AUTOMATIC TEST CHANNEL CALIBRATION

Note **Before performing this procedure, ensure that the AUTO CAL feature is turned OFF for MFC_DRIVE_1, MFC_DRIVE_2 and MFC_DRIVE_3 if installed). Ensure that the AUTO CAL feature is turned ON for the TEST CHANNEL (see Section 4.10.1.6).**

To calibrate the outputs as a group with the **AOUTS CALIBRATION** command, press:

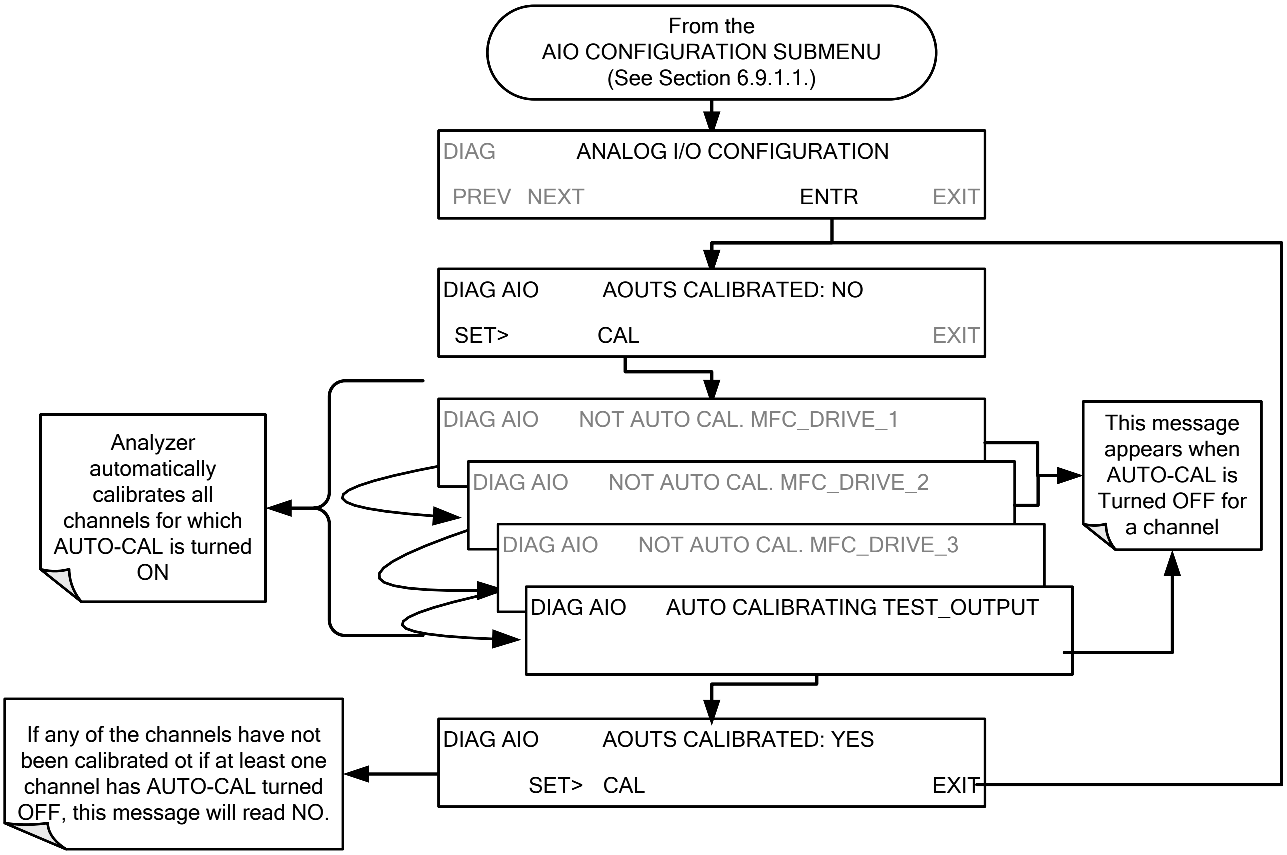
From the
AIO CONFIGURATION SUBMENU
(See Section 6.9.1.1.)
DIAG ANALOG I/O CONFIGURATION
PREV NEXT ENTR EXIT
DIAG AIO AOUTS CALIBRATED: NO
SET> CAL EXIT
DIAG AIO NOT AUTO CAL. MFC_DRIVE_1
DIAG AIO NOT AUTO CAL. MFC_DRIVE_2
DIAG AIO NOT AUTO CAL. MFC_DRIVE_3
DIAG AIO AUTO CALIBRATING TEST_OUTPUT
DIAG AIO AOUTS CALIBRATED: YES
SET> CAL EXIT
Analyzer automatically calibrates all channels for which AUTO-CAL is turned ON
This message appears when AUTO-CAL is Turned OFF for a channel
If any of the channels have not been calibrated ot if at least one channel has AUTO-CAL turned OFF, this message will read NO.

Note **Manual calibration should be used for the 0.1V range or in cases where the outputs must be closely matched to the characteristics of the recording device. Manual calibration requires that the AUTOCAL feature be disabled.**

To initiate an automatic calibration from inside the **TEST CHANNEL** submenu, press:

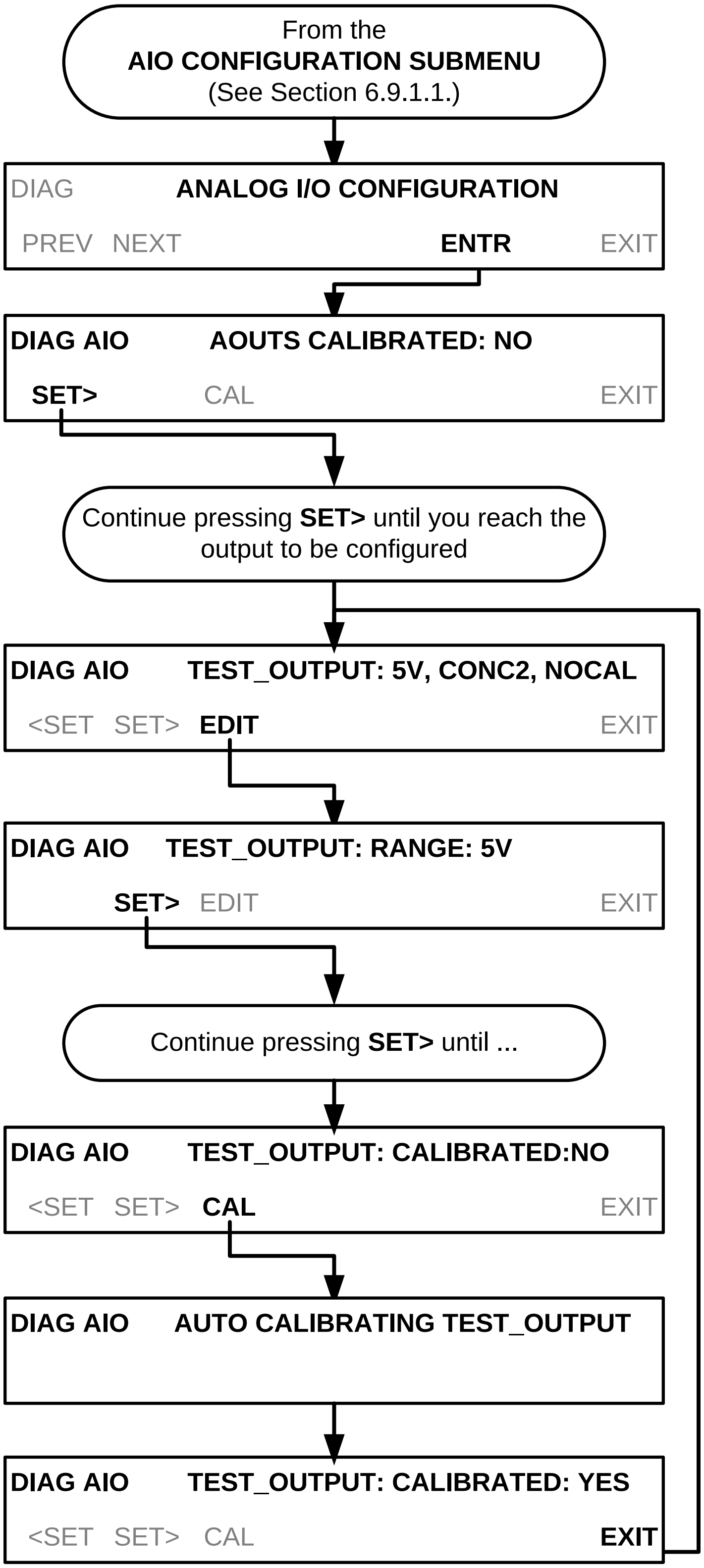
From the
AIO CONFIGURATION SUBMENU
(See Section 6.9.1.1.)
DIAG
ANALOG I/O CONFIGURATION
PREV NEXT ENTR EXIT
DIAG AIO AOUTS CALIBRATED: NO
SET> CAL EXIT
Continue pressing SET> until you reach the output to be configured
DIAG AIO TEST_OUTPUT: 5V, CONC2, NOCAL
<SET SET> EDIT EXIT
DIAG AIO TEST_OUTPUT: RANGE: 5V
SET> EDIT EXIT
Continue pressing SET> until ...
DIAG AIO TEST_OUTPUT: CALIBRATED:NO
<SET SET> CAL EXIT
DIAG AIO AUTO CALIBRATING TEST_OUTPUT
DIAG AIO TEST_OUTPUT: CALIBRATED: YES
<SET SET> CAL EXIT

MANUAL CALIBRATION OF THE TEST CHANNEL CONFIGURED FOR VOLTAGE RANGES

For highest accuracy, the voltages of the analog outputs can be calibrated manually.

Note **The menu for manually adjusting the analog output signal level will only appear if the AUTO-CAL feature is turned off for the channel being adjusted (see Section 4.10.1.6).**

Calibration is performed with a voltmeter connected across the output terminals and by changing the actual output signal level using the front panel buttons in 100, 10 or 1 count increments.

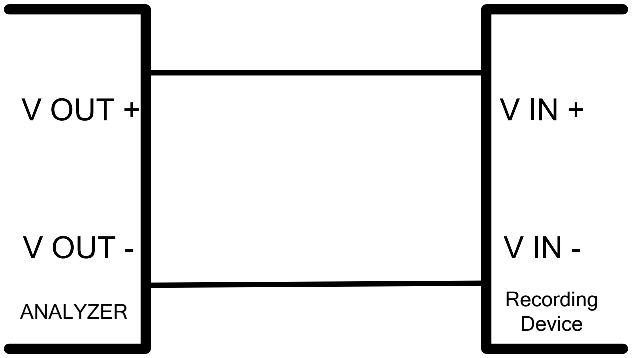

Figure 4-11: Setup for Calibrating the TEST CHANNEL

Table 4-16: Voltage Tolerances for the TEST CHANNEL Calibration

FULL SCALE	**ZERO TOLERANCE**	**SPAN VOLTAGE**	**SPAN TOLERANCE**	**MINIMUM ADJUSTMENT** (1 count)
0.1 VDC	±0.0005V	90 mV	±0.001V	0.02 mV
1 VDC	±0.001V	900 mV	±0.001V	0.24 mV
5 VDC	±0.002V	4500 mV	±0.003V	1.22 mV
10 VDC	±0.004V	4500 mV	±0.006V	2.44 mV

To adjust the signal levels of an analog output channel manually, press:

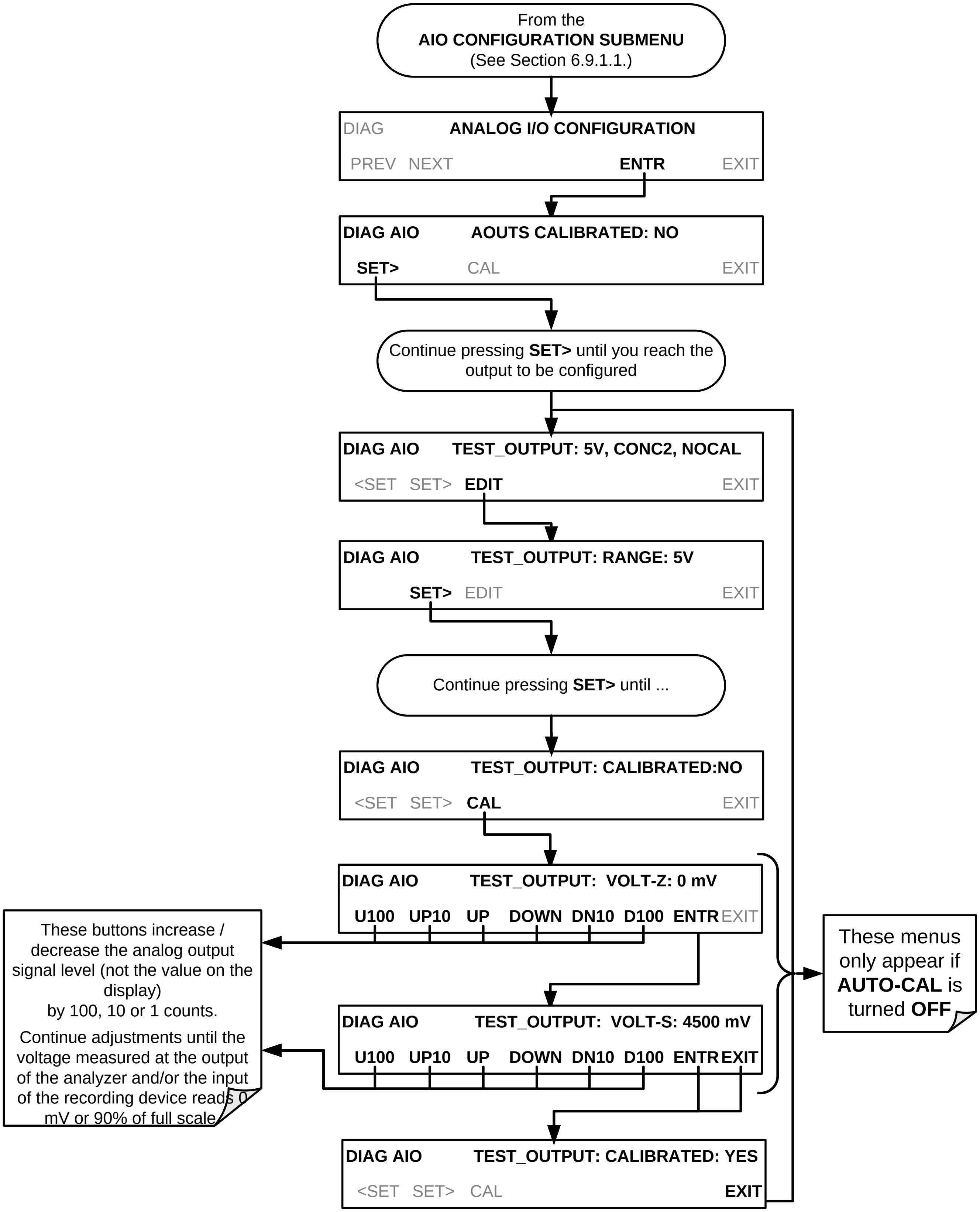
From the
AIO CONFIGURATION SUBMENU
(See Section 6.9.1.1.)
DIAG ANALOG I/O CONFIGURATION
PREV NEXT ENTR EXIT
DIAG AIO AOUTS CALIBRATED: NO
SET> CAL EXIT
Continue pressing SET> until you reach the output to be configured
DIAG AIO TEST_OUTPUT: 5V, CONC2, NOCAL
<SET SET> EDIT EXIT
DIAG AIO TEST_OUTPUT: RANGE: 5V
SET> EDIT EXIT
Continue pressing SET> until ...
DIAG AIO TEST_OUTPUT: CALIBRATED:NO
<SET SET> CAL EXIT
DIAG AIO TEST_OUTPUT: VOLT-Z: 0 mV
U100 UP10 UP DOWN DN10 D100 ENTR EXIT
DIAG AIO TEST_OUTPUT: VOLT-S: 4500 mV
U100 UP10 UP DOWN DN10 D100 ENTR EXIT
DIAG AIO TEST_OUTPUT: CALIBRATED: YES
<SET SET> CAL EXIT

These buttons increase / decrease the analog output signal level (not the value on the display) by 100, 10 or 1 counts.

Continue adjustments until the voltage measured at the output of the analyzer and/or the input of the recording device reads 0 mV or 90% of full scale

These menus only appear if **AUTO-CAL** is turned **OFF**

4.10.1.7. **AIN Calibration**

This is the sub-menu in which to calibrate the A-to-D conversion circuitry (Sections 9.4.11.1 and 10.3.5.1). This calibration is only necessary after a major repair such as the replacement of a CPU, a motherboard or a power supply.

To perform an **AIN CALIBRATION**, press:

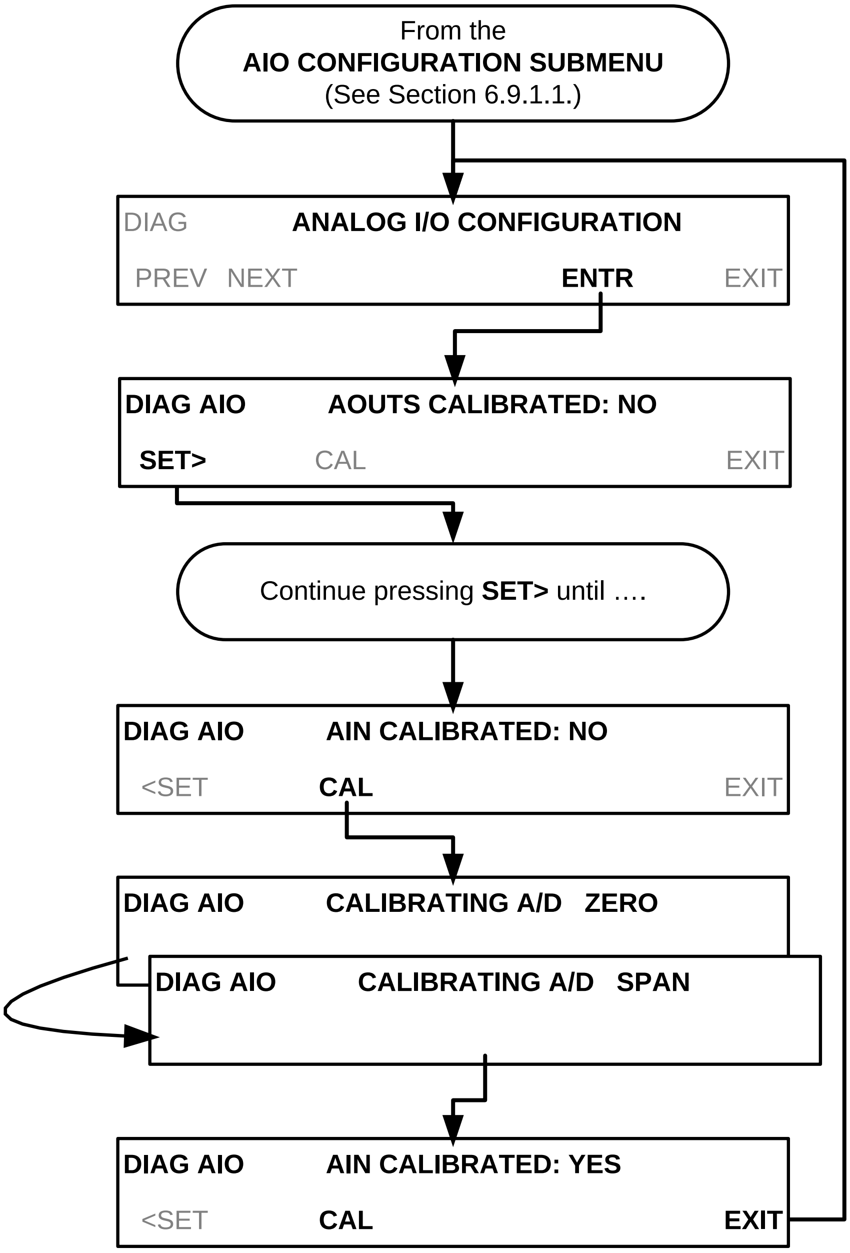
From the
AIO CONFIGURATION SUBMENU
(See Section 6.9.1.1.)
DIAG ANALOG I/O CONFIGURATION
PREV NEXT ENTR EXIT
DIAG AIO AOUTS CALIBRATED: NO
SET> CAL EXIT
Continue pressing SET> until ….
DIAG AIO AIN CALIBRATED: NO
<SET CAL EXIT
DIAG AIO CALIBRATING A/D ZERO
DIAG AIO CALIBRATING A/D SPAN
DIAG AIO AIN CALIBRATED: YES
<SET CAL EXIT

4.11. SETUP > LVL: SETTING UP AND USING LEADS (DASIBI) OPERATING LEVELS

4.11.1. GENERAL INFORMATION ABOUT LEADS LEVELS

The T700 calibrator can be equipped with a version of firmware that includes support for LEADS, a data collection and analysis system LEADS specifically designed for handling meteorological and environmental data particularly when there is a need to integrate data and control instrumentation from several different manufacturers. When an T700 calibrator is equipped with the optional LEADS software used in conjunction with data loggers located in the central data analysis facility it is possible to collect and buffer data between the various calibrators, analyzers and metrological equipment remotely located at an air monitoring station.

Because LEADS was originally developed for use with TNRCC using Dasibi 5008 calibrators, the LEADS version of the T700 includes support for Dasibi "Dot" serial data commands and operational "LEVELs".

It also includes a method for driving external devices via contact closure control outputs in conjunction with an optional bolt-on valve driver assembly (see Section 3.3.1.6).

Note **For more information on the LEADS system, please go to http://www.meteostar.com/.**

4.11.2. DOT COMMANDS

The Dasibi "Dot" commands form a text-based (ASCII) data protocol that is transmitted between a control computer (XENO data logger in this case) and a calibrator or ambient gas analyzer over an RS-232 connection. The details of the protocol are beyond the scope of this document, but in its simplest form the protocol is based on a two or three digit integer preceded by a control-A and a period (.) and then followed by a "!" and a two digit checksum.

EXAMPLE:

^A.xxx!nn

For further information on dot commands, please contact Teledyne API'S Technical Support.

A T700 equipped with LEADS software can be simultaneously operated over the same COMM port using standard Teledyne API's serial data commands and is compatible with APICOM versions 5 and later which include an added feature that allows a user to edit, upload and download level tables.

4.11.3. **LEVELS**

A **LEVEL** is a combination of several parameters:

- An ID number for the LEVEL
- An action, (e.g. GENERATE, GPT, GPTPS & MANUAL)
- A target concentration value
- An output flow rate (if applicable)
- Configuration for one or both of two status output blocks.

Up to twenty levels can be defined and used with the T700 using a range of ID numbers from 0-98. Level 99 is reserved for standby. The levels are not time based and do not include characteristics such as start time or duration, therefore a single LEVEL can not switch between different concentration levels and flow rates. Separate flow and concentration outputs must be programmed into separate LEVELs which are then individually started and stopped either by an operator at the calibrator's front panel or through a serial data operation over the RS-232 or Ethernet ports.

4.11.4. **ACTIVATING AN EXISTING LEVEL**

To activate an existing defined **LEVEL**, press:

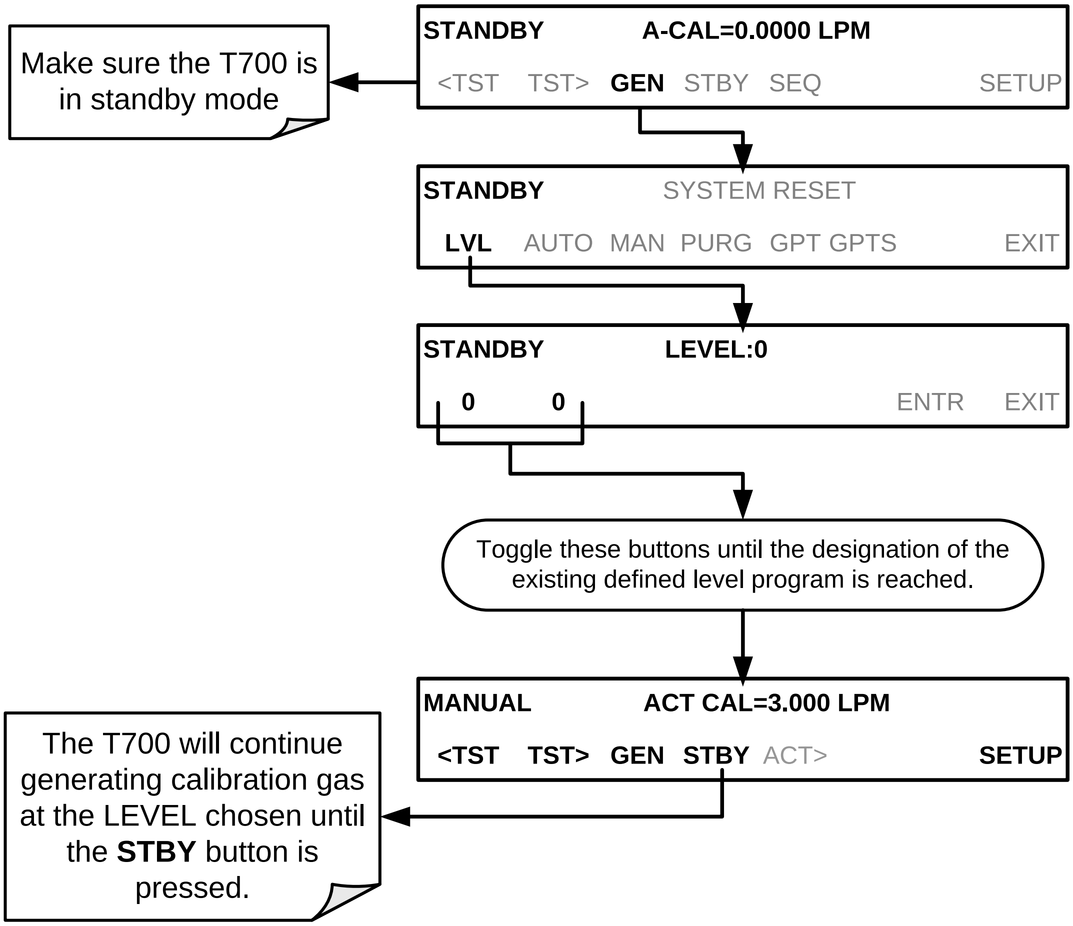
STANDBY A-CAL=0.0000 LPM
<TST TST> GEN STBY SEQ SETUP
STANDBY SYSTEM RESET
LVL AUTO MAN PURG GPT GPTS EXIT
STANDBY LEVEL:0
0 0 ENTR EXIT
MANUAL ACT CAL=3.000 LPM
<TST TST> GEN STBY ACT> SETUP

Make sure the T700 is in standby mode

Toggle these buttons until the designation of the existing defined level program is reached.

The T700 will continue generating calibration gas at the LEVEL chosen until the **STBY** button is pressed.

4.11.5. **PROGRAMMING NEW LEVELS**

To begin programming a new **LEVEL** find the **LVL** submenu by pressing:

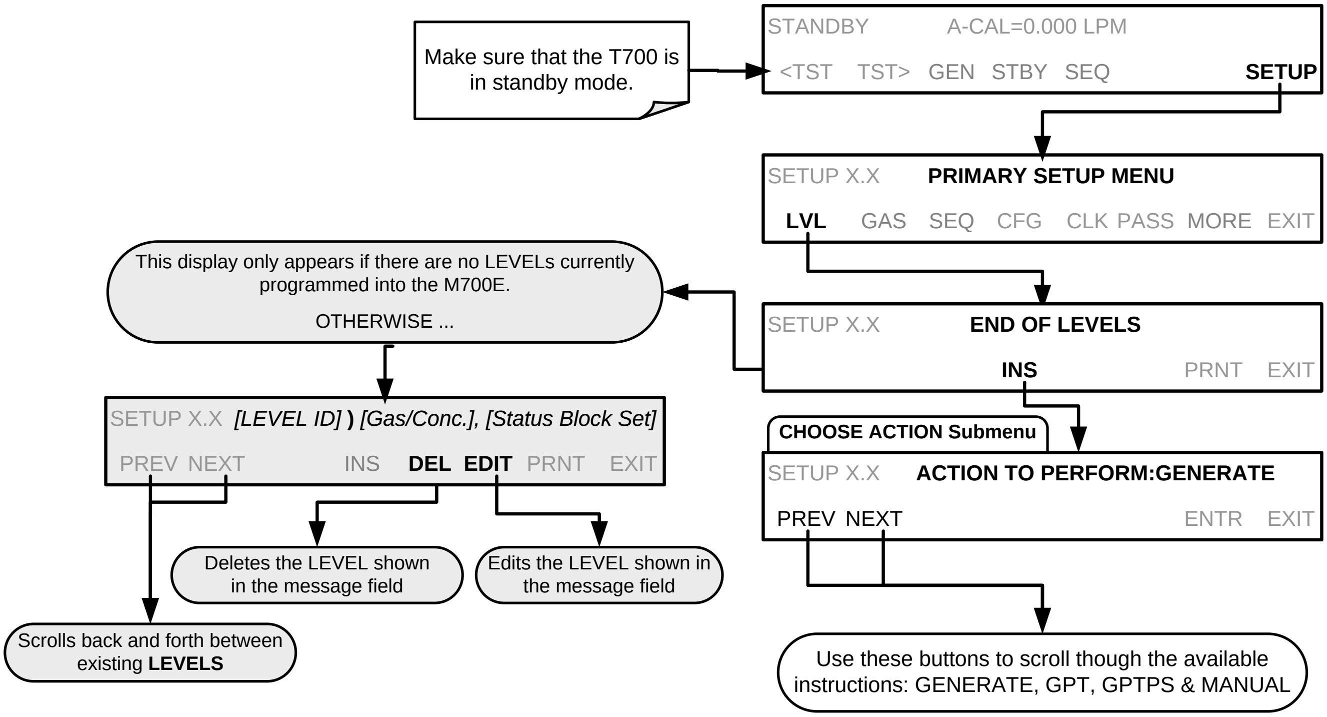
Make sure that the T700 is in standby mode.
STANDBY A-CAL=0.000 LPM
<TST TST> GEN STBY SEQ **SETUP**
SETUP X.X **PRIMARY SETUP MENU**
LVL GAS SEQ CFG CLK PASS MORE EXIT
This display only appears if there are no LEVELs currently programmed into the M700E.
OTHERWISE ...
SETUP X.X **END OF LEVELS**
INS PRNT EXIT
SETUP X.X *[LEVEL ID]* **)** *[Gas/Conc.], [Status Block Set]*
PREV NEXT INS **DEL** **EDIT** PRNT EXIT
CHOOSE ACTION Submenu
SETUP X.X **ACTION TO PERFORM:GENERATE**
PREV NEXT ENTR EXIT
Deletes the LEVEL shown in the message field
Edits the LEVEL shown in the message field
Scrolls back and forth between existing **LEVELS**
Use these buttons to scroll though the available instructions: GENERATE, GPT, GPTPS & MANUAL

4.11.5.1. **Creating a GENERATE LEVEL**

To create a **LEVEL** using the T700's **AUTO** generation function, press:

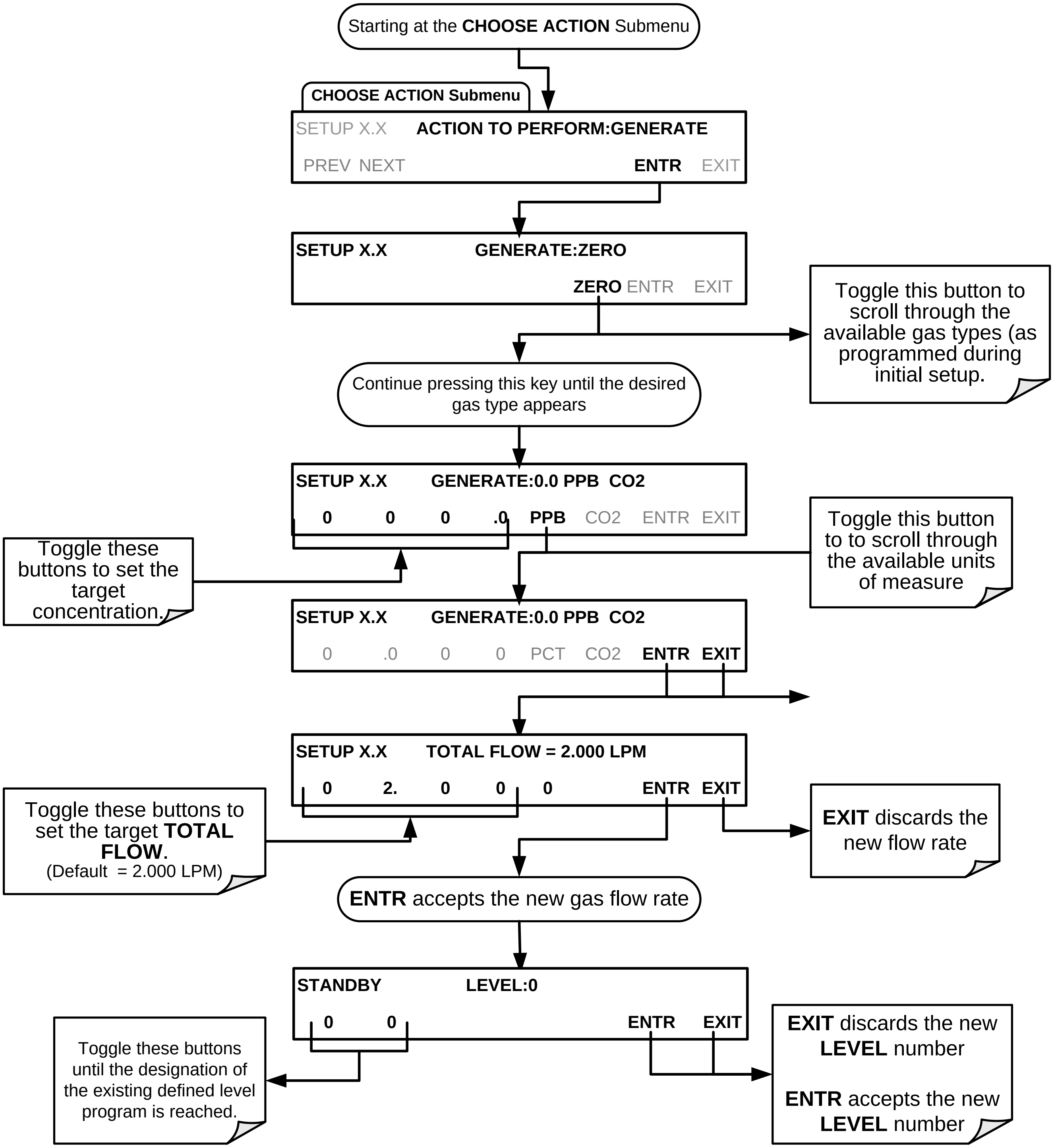
CHOOSE ACTION Submenu
SETUP X.X ACTION TO PERFORM:GENERATE
PREV NEXT ENTR EXIT
SETUP X.X GENERATE:ZERO
ZERO ENTR EXIT
SETUP X.X GENERATE:0.0 PPB CO2
0 0 0 .0 PPB CO2 ENTR EXIT
SETUP X.X GENERATE:0.0 PPB CO2
0 .0 0 0 PCT CO2 ENTR EXIT
SETUP X.X TOTAL FLOW = 2.000 LPM
0 2. 0 0 0 ENTR EXIT
STANDBY LEVEL:0
0 0 ENTR EXIT

Starting at the **CHOOSE ACTION** Submenu

Toggle this button to scroll through the available gas types (as programmed during initial setup.

Continue pressing this key until the desired gas type appears

Toggle these buttons to set the target concentration.

Toggle this button to to scroll through the available units of measure

Toggle these buttons to set the target **TOTAL FLOW**.
(Default = 2.000 LPM)

EXIT discards the new flow rate

ENTR accepts the new gas flow rate

Toggle these buttons until the designation of the existing defined level program is reached.

EXIT discards the new **LEVEL** number

ENTR accepts the new **LEVEL** number

4.11.5.2. **Creating a GPT LEVEL**

To create a **LEVEL** using the T700's **GPT** function, press:

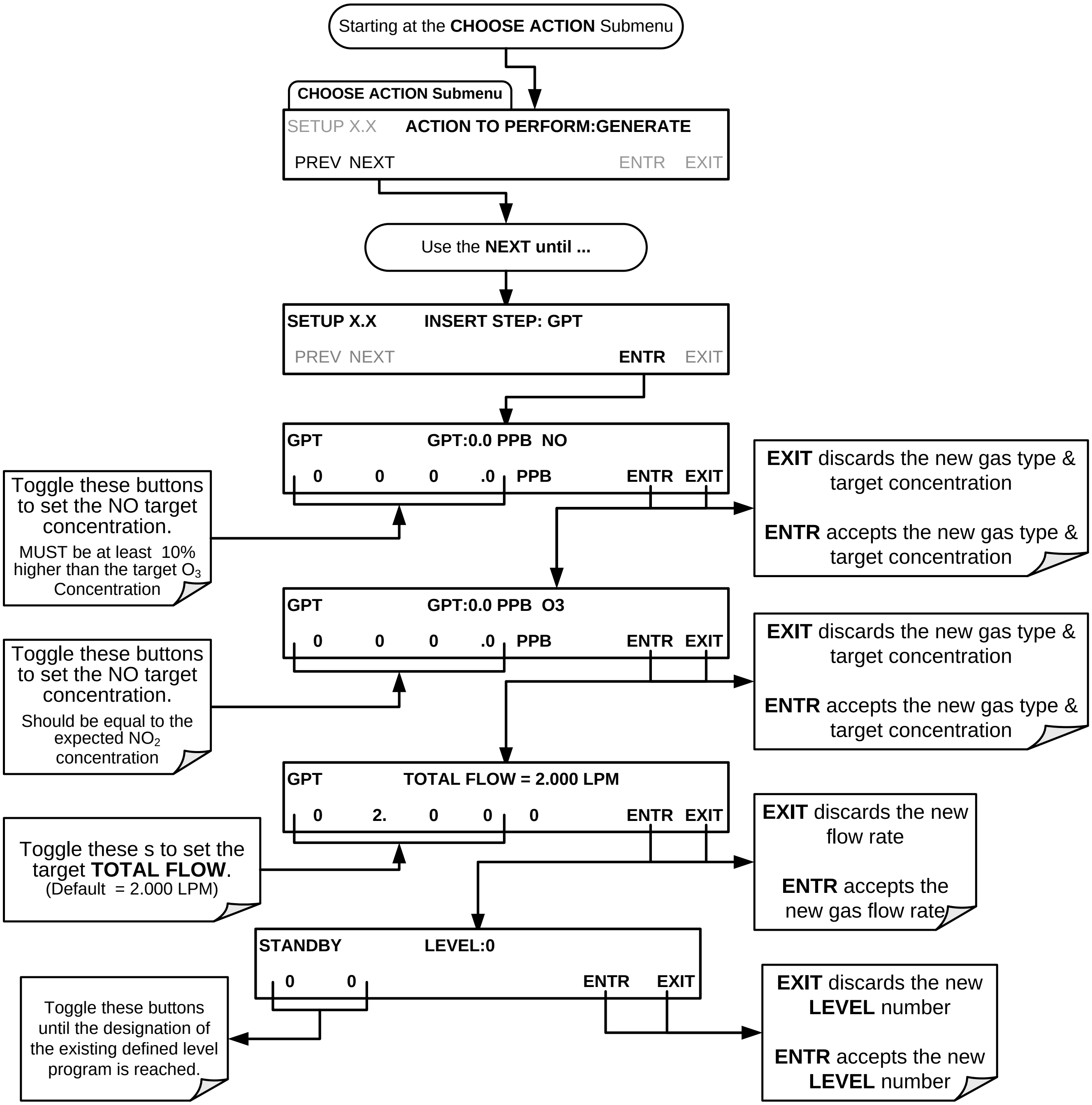
Starting at the **CHOOSE ACTION** Submenu
CHOOSE ACTION Submenu
SETUP X.X ACTION TO PERFORM:GENERATE
PREV NEXT ENTR EXIT
Use the **NEXT until ...**
SETUP X.X INSERT STEP: GPT
PREV NEXT ENTR EXIT
GPT GPT:0.0 PPB NO
0 0 0 .0 PPB ENTR EXIT
Toggle these buttons to set the NO target concentration.
MUST be at least 10% higher than the target O_3 Concentration
EXIT discards the new gas type & target concentration
ENTR accepts the new gas type & target concentration
GPT GPT:0.0 PPB O3
0 0 0 .0 PPB ENTR EXIT
Toggle these buttons to set the NO target concentration.
Should be equal to the expected NO_2 concentration
EXIT discards the new gas type & target concentration
ENTR accepts the new gas type & target concentration
GPT TOTAL FLOW = 2.000 LPM
0 2. 0 0 0 ENTR EXIT
Toggle these s to set the target **TOTAL FLOW**.
(Default = 2.000 LPM)
EXIT discards the new flow rate
ENTR accepts the new gas flow rate
STANDBY LEVEL:0
0 0 ENTR EXIT
Toggle these buttons until the designation of the existing defined level program is reached.
EXIT discards the new **LEVEL** number
ENTR accepts the new **LEVEL** number

4.11.5.3. **Creating a GPTPS LEVEL**

To create a **LEVEL** using the T700's **GPTPS** function, press:

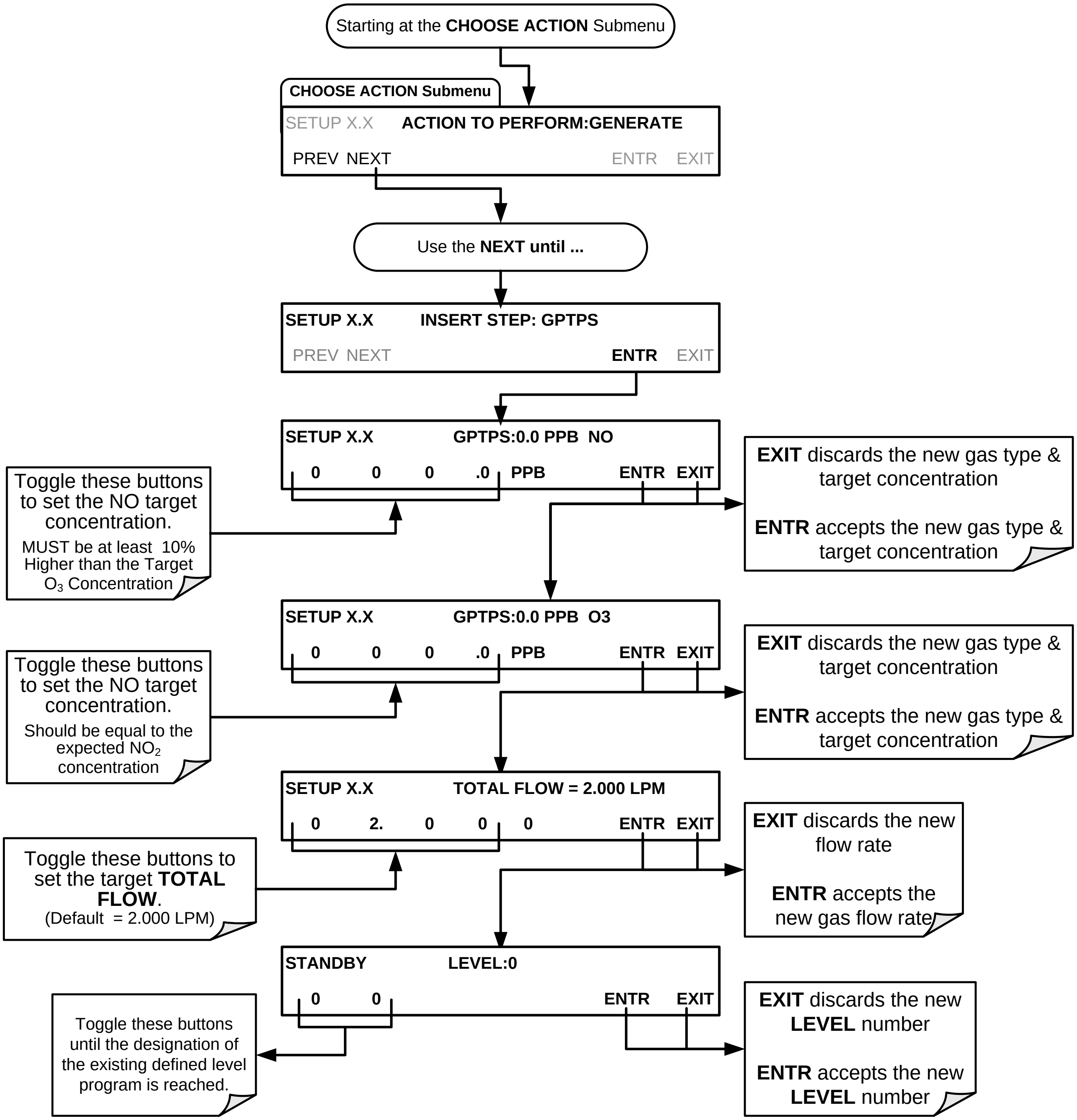
Starting at the **CHOOSE ACTION** Submenu
CHOOSE ACTION Submenu
SETUP X.X **ACTION TO PERFORM:GENERATE**
PREV NEXT ENTR EXIT
Use the **NEXT until ...**
SETUP X.X INSERT STEP: GPTPS
PREV NEXT **ENTR** EXIT
SETUP X.X GPTPS:0.0 PPB NO
0 0 0 .0 PPB ENTR EXIT
Toggle these buttons to set the NO target concentration.
MUST be at least 10% Higher than the Target O_3 Concentration
EXIT discards the new gas type & target concentration
ENTR accepts the new gas type & target concentration
SETUP X.X GPTPS:0.0 PPB O3
0 0 0 .0 PPB ENTR EXIT
Toggle these buttons to set the NO target concentration.
Should be equal to the expected NO_2 concentration
EXIT discards the new gas type & target concentration
ENTR accepts the new gas type & target concentration
SETUP X.X TOTAL FLOW = 2.000 LPM
0 2. 0 0 0 ENTR EXIT
Toggle these buttons to set the target **TOTAL FLOW**.
(Default = 2.000 LPM)
EXIT discards the new flow rate
ENTR accepts the new gas flow rate
STANDBY LEVEL:0
0 0 ENTR EXIT
Toggle these buttons until the designation of the existing defined level program is reached.
EXIT discards the new **LEVEL** number
ENTR accepts the new **LEVEL** number

4.11.5.4. **Creating a MANUAL LEVEL**

To create a level using the T700's **MANUAL** generation function, press:

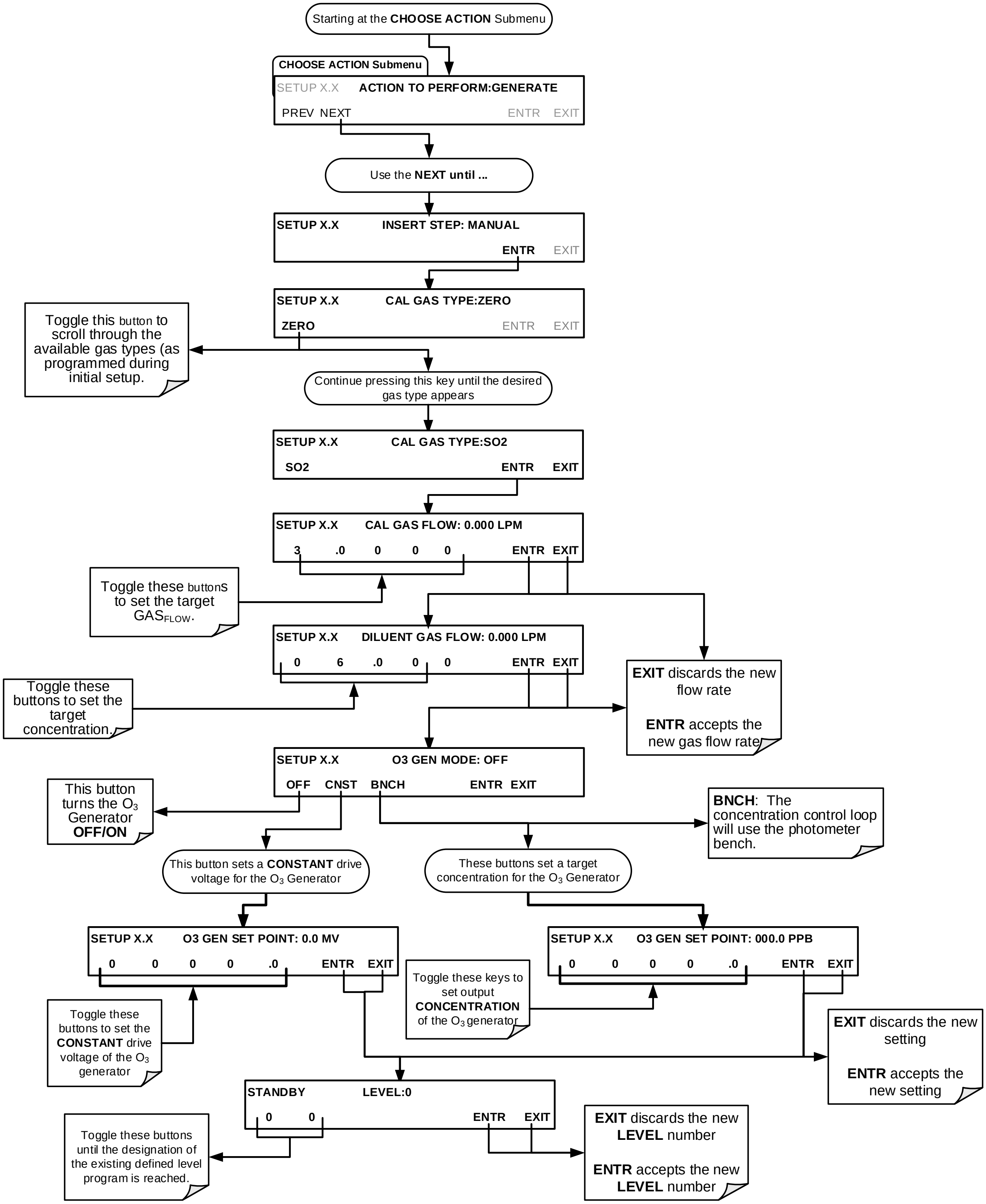
Starting at the CHOOSE ACTION Submenu
CHOOSE ACTION Submenu
SETUP X.X ACTION TO PERFORM:GENERATE
PREV NEXT ENTR EXIT
Use the NEXT until ...
SETUP X.X INSERT STEP: MANUAL
ENTR EXIT
SETUP X.X CAL GAS TYPE:ZERO
ZERO ENTR EXIT
Toggle this button to scroll through the available gas types (as programmed during initial setup.
Continue pressing this key until the desired gas type appears
SETUP X.X CAL GAS TYPE:SO2
SO2 ENTR EXIT
SETUP X.X CAL GAS FLOW: 0.000 LPM
3 .0 0 0 0 ENTR EXIT
Toggle these buttons to set the target GAS_FLOW.
SETUP X.X DILUENT GAS FLOW: 0.000 LPM
0 6 .0 0 0 ENTR EXIT
Toggle these buttons to set the target concentration.
EXIT discards the new flow rate
ENTR accepts the new gas flow rate
SETUP X.X O3 GEN MODE: OFF
OFF CNST BNCH ENTR EXIT
This button turns the O3 Generator OFF/ON
BNCH: The concentration control loop will use the photometer bench.
This button sets a CONSTANT drive voltage for the O3 Generator
These buttons set a target concentration for the O3 Generator
SETUP X.X O3 GEN SET POINT: 0.0 MV
0 0 0 0 .0 ENTR EXIT
SETUP X.X O3 GEN SET POINT: 000.0 PPB
0 0 0 0 .0 ENTR EXIT
Toggle these keys to set output CONCENTRATION of the O3 generator
Toggle these buttons to set the CONSTANT drive voltage of the O3 generator
EXIT discards the new setting
ENTR accepts the new setting
STANDBY LEVEL:0
0 0 ENTR EXIT
Toggle these buttons until the designation of the existing defined level program is reached.
EXIT discards the new LEVEL number
ENTR accepts the new LEVEL number

4.11.5.5. **Editing or Deleting a LEVEL**

To edit or delete an existing **LEVEL**, press:

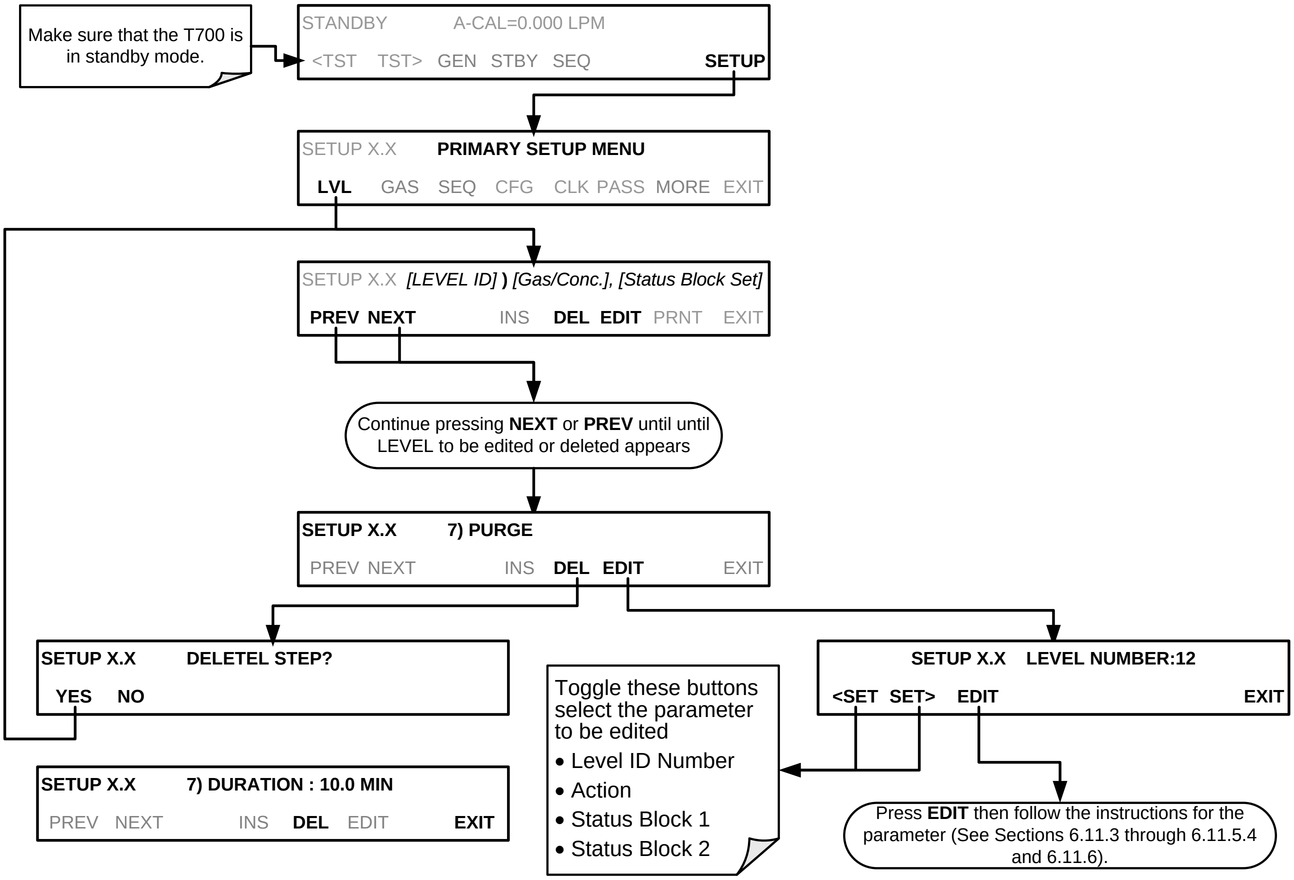
STANDBY A-CAL=0.000 LPM
<TST TST> GEN STBY SEQ SETUP
SETUP X.X PRIMARY SETUP MENU
LVL GAS SEQ CFG CLK PASS MORE EXIT
SETUP X.X [LEVEL ID]) [Gas/Conc.], [Status Block Set]
PREV NEXT INS DEL EDIT PRNT EXIT
SETUP X.X 7) PURGE
PREV NEXT INS DEL EDIT EXIT
SETUP X.X DELETEL STEP?
YES NO
SETUP X.X 7) DURATION : 10.0 MIN
PREV NEXT INS DEL EDIT EXIT
SETUP X.X LEVEL NUMBER:12
<SET SET> EDIT EXIT

Make sure that the T700 is in standby mode.

Continue pressing **NEXT** or **PREV** until until LEVEL to be edited or deleted appears

Toggle these buttons select the parameter to be edited

- Level ID Number
- Action
- Status Block 1
- Status Block 2

Press **EDIT** then follow the instructions for the parameter (See Sections 6.11.3 through 6.11.5.4 and 6.11.6).

4.11.6. CONFIGURING LEVEL STATUS BLOCKS

There are two **STATUS BLOCKS** associated with **LEADS LEVELS**.

- **BLOCK 1:** This block corresponds to the physical CONTROL OUTPUT connections located on the back panel of the T700 (see Figure 3-4 and Section 3.3.1.5).
- **BLOCK 2**: The second status block does not correspond to any physical output but is used to communicate status over the serial data port.

To configure the either of the **STATUS BLOCKS**, press:

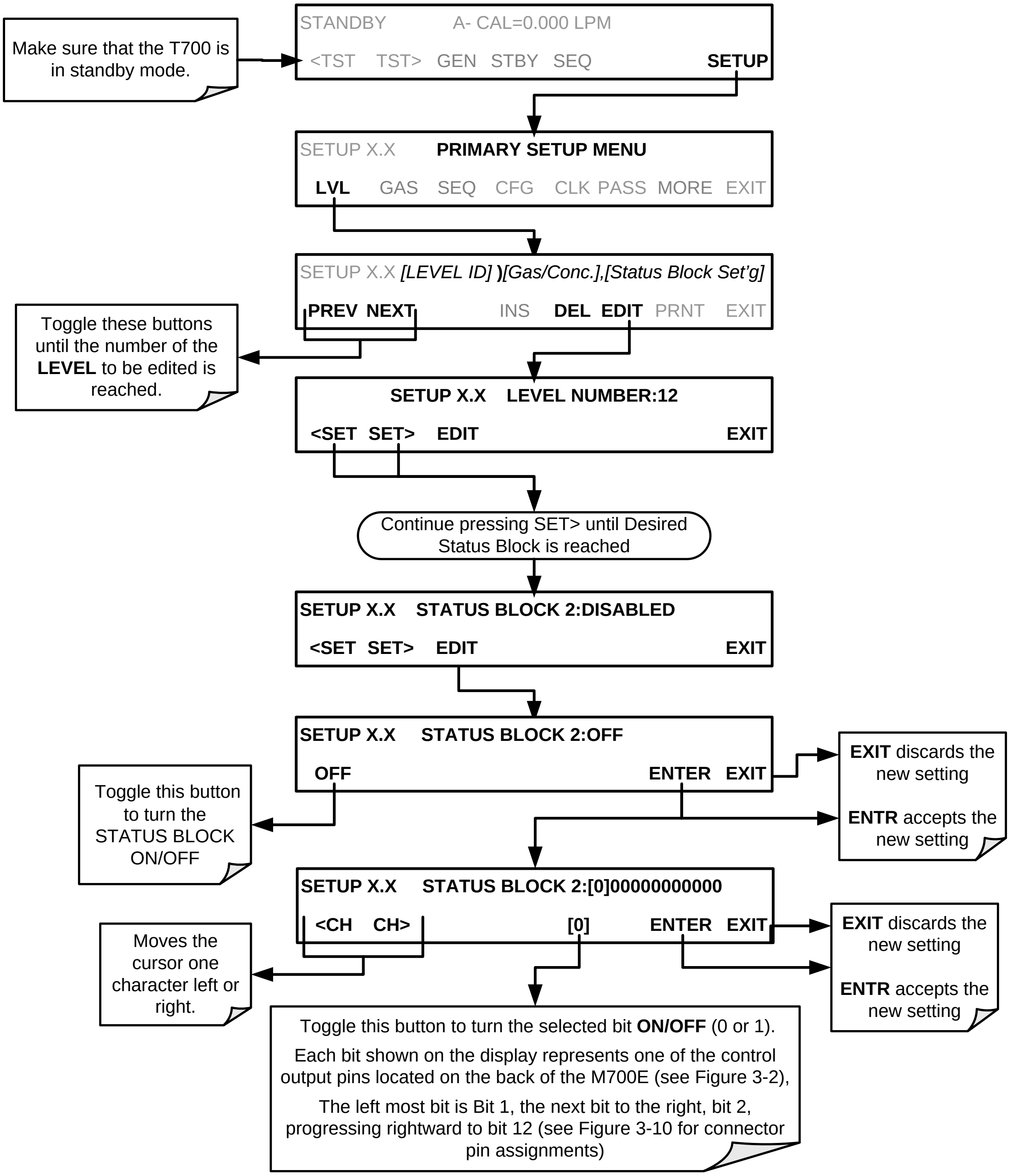
STANDBY A- CAL=0.000 LPM
<TST TST> GEN STBY SEQ SETUP
SETUP X.X PRIMARY SETUP MENU
LVL GAS SEQ CFG CLK PASS MORE EXIT
SETUP X.X *[LEVEL ID]* **)***[Gas/Conc.],[Status Block Set'g]*
PREV NEXT INS DEL EDIT PRNT EXIT
SETUP X.X LEVEL NUMBER:12
<SET SET> EDIT EXIT
SETUP X.X STATUS BLOCK 2:DISABLED
<SET SET> EDIT EXIT
SETUP X.X STATUS BLOCK 2:OFF
OFF ENTER EXIT
SETUP X.X STATUS BLOCK 2:[0]00000000000
<CH CH> [0] ENTER EXIT

Make sure that the T700 is in standby mode.

Toggle these buttons until the number of the **LEVEL** to be edited is reached.

Continue pressing SET> until Desired Status Block is reached

Toggle this button to turn the STATUS BLOCK ON/OFF

EXIT discards the new setting

ENTR accepts the new setting

Moves the cursor one character left or right.

EXIT discards the new setting

ENTR accepts the new setting

Toggle this button to turn the selected bit **ON/OFF** (0 or 1).

Each bit shown on the display represents one of the control output pins located on the back of the M700E (see Figure 3-2),

The left most bit is Bit 1, the next bit to the right, bit 2, progressing rightward to bit 12 (see Figure 3-10 for connector pin assignments)

This page intentionally left blank.

5. COMMUNICATIONS SETUP AND OPERATION

The instrument rear panel connections include an Ethernet port, a USB port (option) and two serial communications ports (labeled RS232, which is the COM1 port, and COM2) located on the rear panel (refer to Figure 3-4). These ports give the user the ability to communicate with, issue commands to, and receive data from the analyzer through an external computer system or terminal.

This section provides pertinent information regarding communication equipment, describes the instrument's communications modes, presents configuration instructions for the communications ports, and provides instructions for their use.

5.1. DATA TERMINAL/COMMUNICATION EQUIPMENT (DTE DCE)

RS-232 was developed for allowing communications between data terminal equipment (DTE) and data communication equipment (DCE). Basic terminals always fall into the DTE category whereas modems are always considered DCE devices. The difference between the two is the pin assignment of the Data Receive and Data Transmit functions.

- DTE devices receive data on pin 2 and transmit data on pin 3.
- DCE devices receive data on pin 3 and transmit data on pin 2.

To allow the analyzer to be used with terminals (DTE), modems (DCE) and computers (which can be either), a switch mounted below the serial ports on the rear panel allows the user to set the RS-232 configuration for one of these two data devices. This switch exchanges the Receive and Transmit lines on RS-232 emulating a cross-over or null-modem cable. The switch has no effect on COM2.

The T700 is equipped with two serial communication ports (labeled **RS232** and **COM2**), a USB com port and an Ethernet port located on the rear panel. The two serial ports are accessible via two DB-9 connectors (see Figure 3-4): RS232 (COM1), a male DB-9 connector, and COM2, a female DB9 connector.

The RS232 and COM2 ports operate similarly and give the user the ability to communicate with, issue commands to, and receive data from the calibrator through an external computer system or terminal.

- The RS-232 port (COM1) can also be configured to operate in single or RS-232 multi-drop mode (option 62, Sections 3.3.1.7 and 5.2).
- The COM2 port can be configured for standard RS-232 operation, half-duplex RS-485 communication. (Contact the factory for RS-485 communication configuration).

The Ethernet connector allows the analyzer to be connected to a network running TCP/IP or to the public Internet if access is available. The network must have routers capable of operating at 10BaseT or 100BaseT. DHCP is enabled by default (Section 5.4.1). This configuration is useful for quickly getting an instrument up and running on a network. However, for permanent Ethernet connections, a static IP address should be used (Section 5.4.1.1). Edit the Instrument and Gateway IP addresses and Subnet Mask to the desired settings. Then, from the computer, enter the same information through an application such as HyperTerminal.

The USB port is for optional direct communication between the calibrator and a desktop or laptop computer. This configuration can be used when the **COM2** port is not in use except for multidrop communication. For setup instructions, please refer to Sections 3.3.1.7 and 5.2.1.

5.2. COMMUNICATION MODES, BAUD RATE AND PORT TESTING

Use the SETUP>MORE>COMM menu to configure COM1 (labeled **RS232** on instrument rear panel) and/or COM2 (labeled **COM2** on instrument rear panel) for communication modes, baud rate and/or port testing for correct connection.

5.2.1. COMMUNICATION MODES

Each of the calibrator's serial ports can be configured to operate in a number of different modes, listed in Table 5-1. As modes are selected, the calibrator sums the Mode ID numbers and displays this combined number on the front panel display. For example, if quiet mode (01), computer mode (02) and Multi-Drop-enabled mode (32) are selected, the Calibrator would display a combined **MODE ID** of **35**.

Table 5-1: COMM Port Communication Modes

MODE[1]	ID	DESCRIPTION
QUIET	**1**	Quiet mode suppresses any feedback from the calibrator (such as warning messages) to the remote device and is typically used when the port is communicating with a computer program where such intermittent messages might cause communication problems. Such feedback is still available but a command must be issued to receive them.
COMPUTER	**2**	Computer mode inhibits echoing of typed characters and is used when the port is communicating with a computer operated control program.
E,8,1 / E,7,1	**2048**	When turned on this mode switches the **COMM** port settings from No parity; 8 data bits; 1 stop bit to Even parity; 7 data bits; 1 stop bit
SECURITY	**4**	When enabled, the serial port requires a password before it will respond. The only command that is active is the help screen (? CR).
RS-485	**1024**	Configures the **COM2** Port for RS-485 communication. RS-485 mode has precedence over multi-drop mode if both are enabled.
MULTI-DROP PROTOCOL	**32**	Multi-drop protocol allows a multi-instrument configuration on a single communications channel. Multi-drop requires the use of instrument IDs.
ENABLE MODEM	**64**	Enables to send a modem initialization string at power-up. Asserts certain lines in the RS-232 port to enable the modem to communicate.
ERROR CHECKING[2]	**128**	Fixes certain types of parity errors at certain Hessen protocol installations.

MODE[1]	ID	DESCRIPTION
XON/XOFF HANDSHAKE[2]	**256**	Disables XON/XOFF data flow control also known as software handshaking.
HARDWARE HANDSHAKE	**8**	Enables CTS/RTS style hardwired transmission handshaking. This style of data transmission handshaking is commonly used with modems or terminal emulation protocols as well as by Teledyne Instrument's APICOM software.
HARDWARE FIFO[2]	**512**	Disables the **HARDWARE FIFO** (First In – First Out), When FIFO is enabled it improves data transfer rate for that COMM port.
COMMAND PROMPT	**4096**	Enables a command prompt when in terminal mode.
[1] Modes are listed in the order in which they appear in the **SETUP** > **MORE** > **COMM** > **COM[1 OR 2]** > **MODE** menu [2] The default setting for this feature is **ON.** Do not disable unless instructed to by Teledyne API's Technical Support team.		

Note **Communication Modes for each COMM port must be configured independently.**

Press the following buttons to select communication modes for a one of the COMM Ports, such as the following example where **RS-485** mode is enabled:

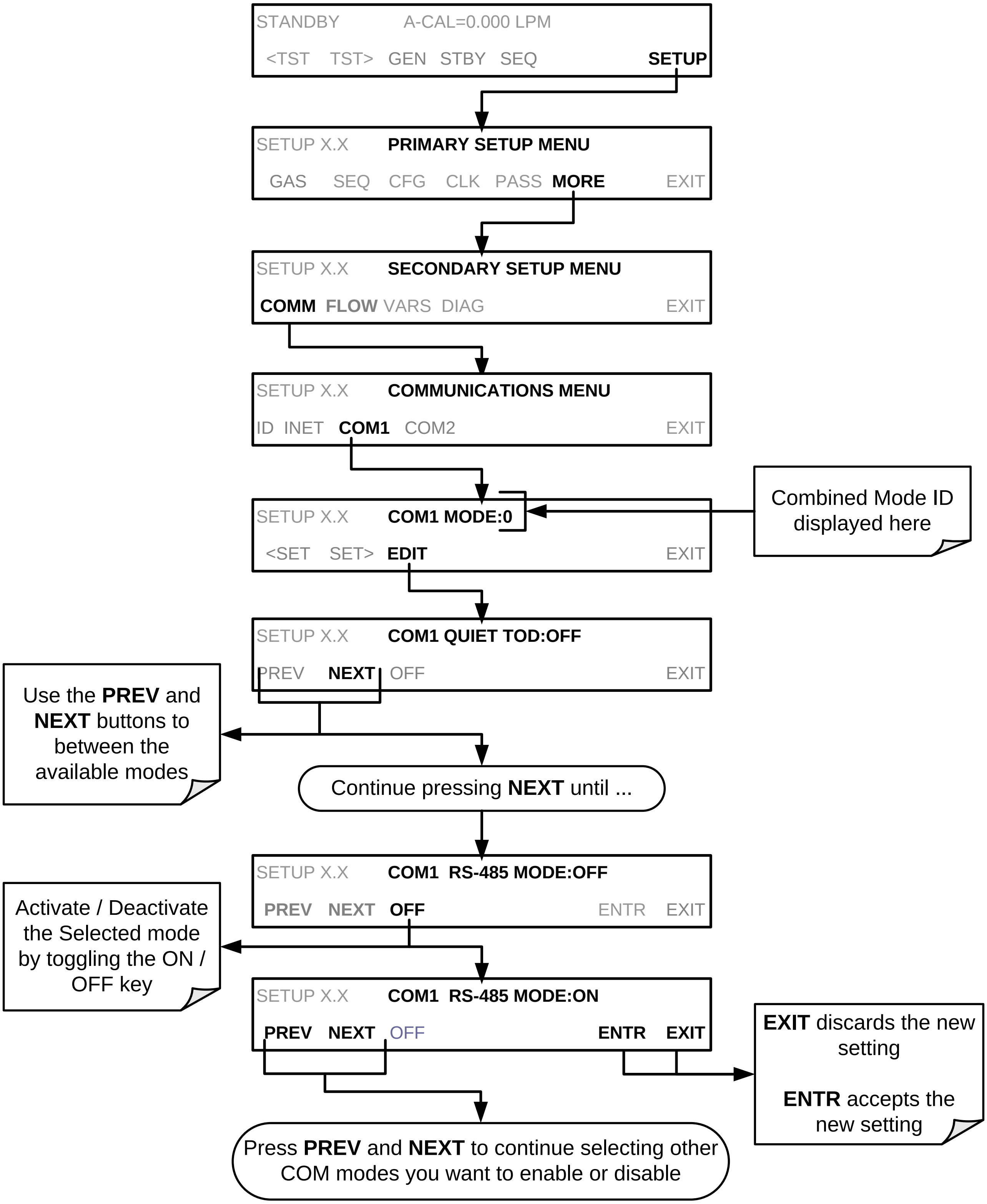
STANDBY A-CAL=0.000 LPM
<TST TST> GEN STBY SEQ **SETUP**
SETUP X.X **PRIMARY SETUP MENU**
GAS SEQ CFG CLK PASS **MORE** EXIT
SETUP X.X **SECONDARY SETUP MENU**
COMM FLOW VARS DIAG EXIT
SETUP X.X **COMMUNICATIONS MENU**
ID INET **COM1** COM2 EXIT
SETUP X.X **COM1 MODE:0**
<SET SET> **EDIT** EXIT
SETUP X.X **COM1 QUIET TOD:OFF**
PREV **NEXT** OFF EXIT
SETUP X.X **COM1 RS-485 MODE:OFF**
PREV NEXT **OFF** ENTR EXIT
SETUP X.X **COM1 RS-485 MODE:ON**
PREV **NEXT** OFF **ENTR** **EXIT**

Combined Mode ID displayed here

Use the **PREV** and **NEXT** buttons to between the available modes

Continue pressing **NEXT** until ...

Activate / Deactivate the Selected mode by toggling the ON / OFF key

EXIT discards the new setting

ENTR accepts the new setting

Press **PREV** and **NEXT** to continue selecting other COM modes you want to enable or disable

5.2.2. **COM PORT BAUD RATE**

To select the baud rate of either COM Port, go to SETUP>MORE>COMM and select either COM1 or COM2 as follows (use COM2 to view/match your personal computer baud rate when using the USB port:

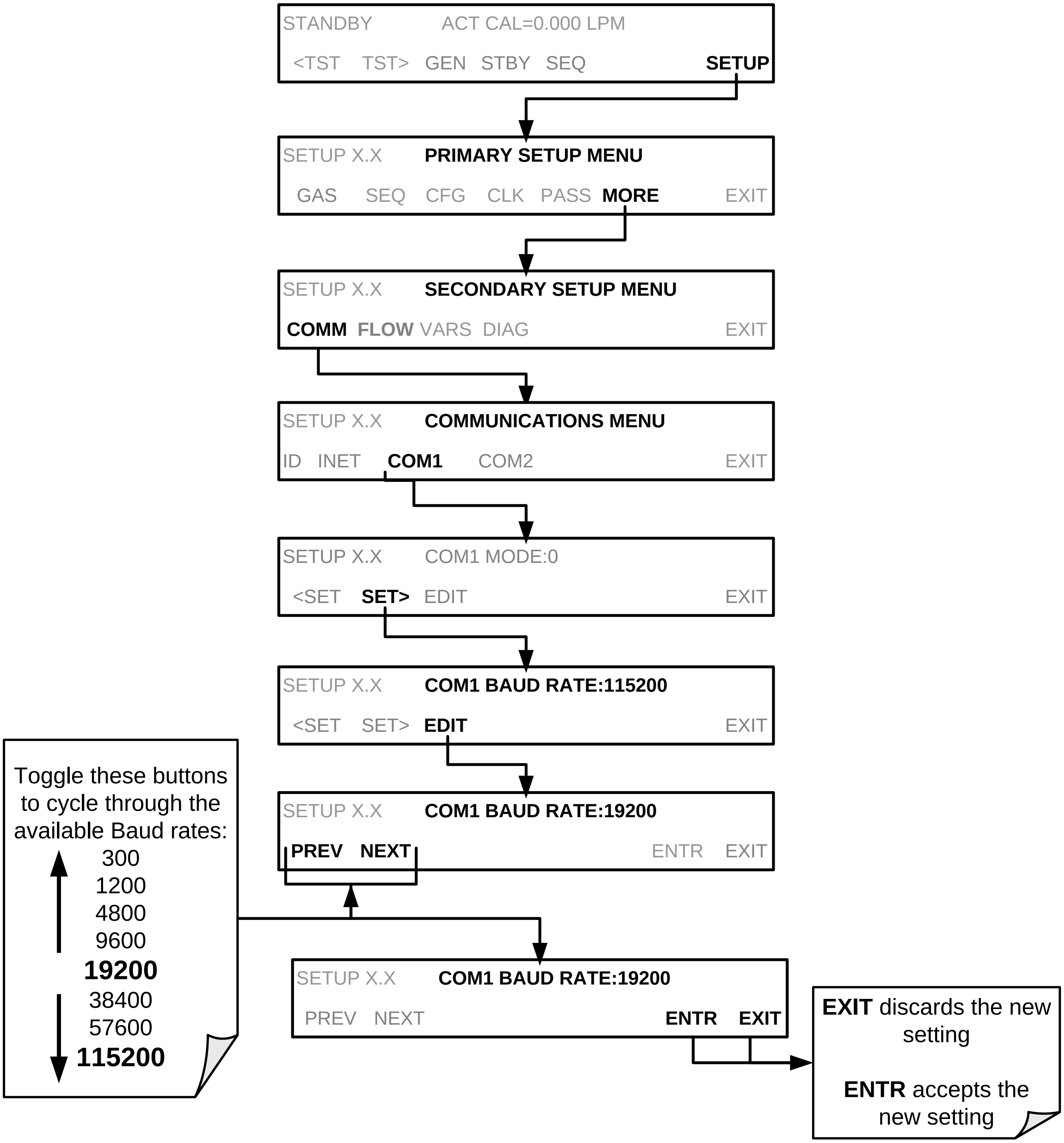
STANDBY ACT CAL=0.000 LPM
<TST TST> GEN STBY SEQ SETUP
SETUP X.X PRIMARY SETUP MENU
GAS SEQ CFG CLK PASS MORE EXIT
SETUP X.X SECONDARY SETUP MENU
COMM FLOW VARS DIAG EXIT
SETUP X.X COMMUNICATIONS MENU
ID INET COM1 COM2 EXIT
SETUP X.X COM1 MODE:0
<SET SET> EDIT EXIT
SETUP X.X COM1 BAUD RATE:115200
<SET SET> EDIT EXIT
SETUP X.X COM1 BAUD RATE:19200
PREV NEXT ENTR EXIT
SETUP X.X COM1 BAUD RATE:19200
PREV NEXT ENTR EXIT

Toggle these buttons to cycle through the available Baud rates:
300
1200
4800
9600
19200
38400
57600
115200

EXIT discards the new setting

ENTR accepts the new setting

5.2.3. **COM PORT TESTING**

The serial ports can be tested for correct connection and output in the **COMM** menu. This test sends a string of 256 ‘w’ characters to the selected COM port. While the test is running, the red LED on the rear panel of the calibrator should flicker.

To initiate the test, press the following button sequence:

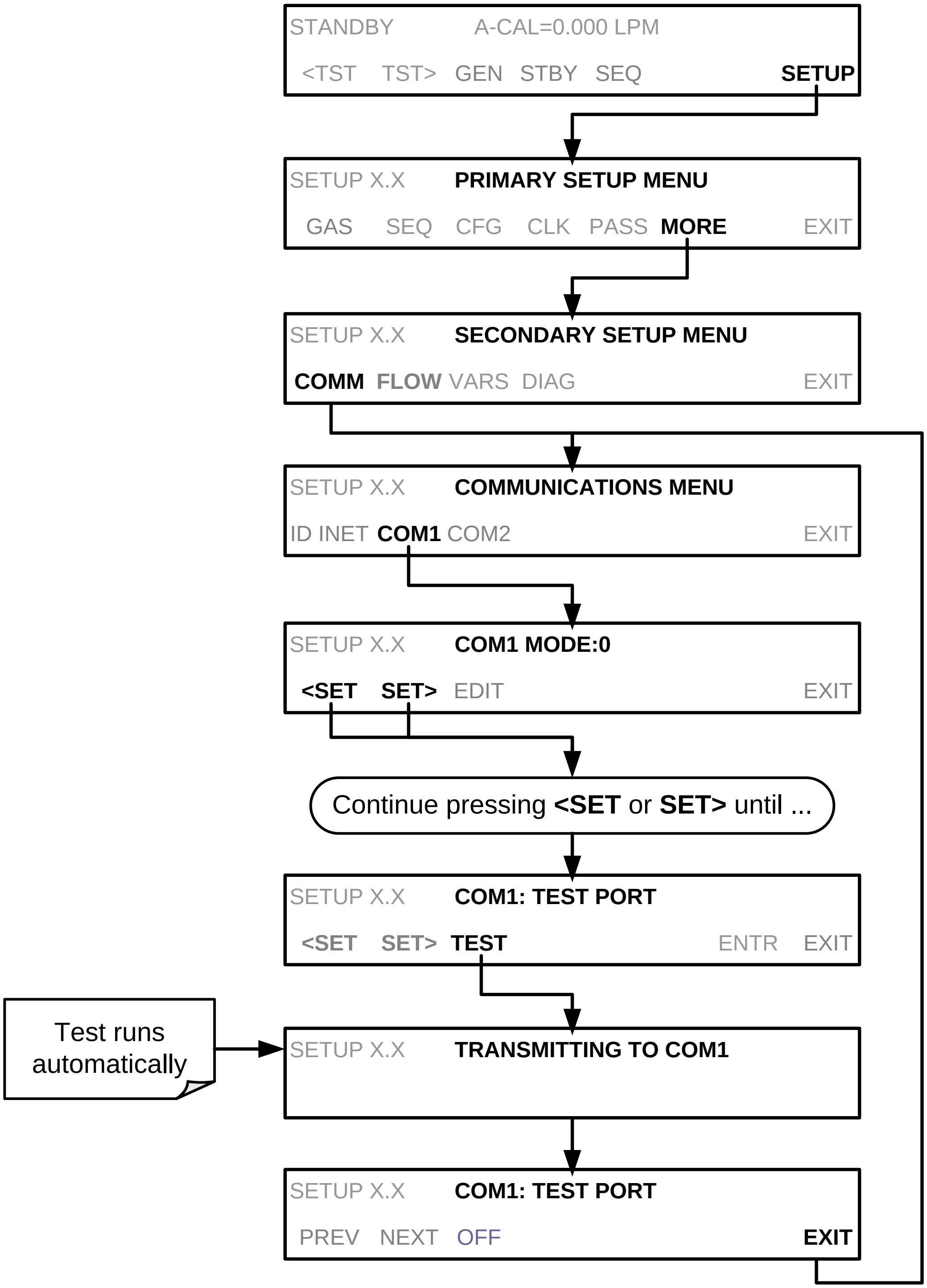
STANDBY A-CAL=0.000 LPM
<TST TST> GEN STBY SEQ SETUP
SETUP X.X PRIMARY SETUP MENU
GAS SEQ CFG CLK PASS MORE EXIT
SETUP X.X SECONDARY SETUP MENU
COMM FLOW VARS DIAG EXIT
SETUP X.X COMMUNICATIONS MENU
ID INET COM1 COM2 EXIT
SETUP X.X COM1 MODE:0
<SET SET> EDIT EXIT
Continue pressing <SET or SET> until ...
SETUP X.X COM1: TEST PORT
<SET SET> TEST ENTR EXIT
Test runs automatically
SETUP X.X TRANSMITTING TO COM1
SETUP X.X COM1: TEST PORT
PREV NEXT OFF EXIT

5.3. RS-485 (OPTION)

The COM2 port of the instrument's rear panel is set up for RS-232 communication but can be reconfigured for RS-485 communication. Contact Technical Support. If this option was elected at the time of purchase, the rear panel was preconfigured at the factory. Choosing this option disallows use of the USB port.

5.4. REMOTE ACCESS VIA THE ETHERNET

Via the Ethernet interface, the calibrator can be connected to any standard 10BaseT or 100BaseT Ethernet network via low-cost network hubs, switches or routers. The interface operates as a standard TCP/IP device on port 3000. This allows a remote computer to connect through the Internet to the calibrator using APICOM, terminal emulators or other programs.

Under the SETUP>MORE>COMM menu the **INET** submenu is used to manage and configure the Ethernet interface with your LAN or Internet Server(s). The calibrator is shipped with DHCP enabled by default. This allows the instrument to be connected to a network or router with a DHCP server (Section 5.4.1), but for a permanent Ethernet connection, configure the instrument with a static IP address (Section 5.4.1.1).

The Ethernet LEDs located on the connector indicate the Ethernet connection status.

Table 5-2: Ethernet Status Indicators

LED	FUNCTION
amber (link)	On when connection to the LAN is valid.
green (activity)	Flickers during any activity on the LAN.

5.4.1. CONFIGURING THE ETHERNET INTERFACE USING DHCP

The Ethernet feature for your T700 uses Dynamic Host Configuration Protocol (DHCP) to configure its interface with your LAN automatically. This requires your network servers also be running DHCP. The calibrator will do this the first time you turn the instrument on after it has been physically connected to your network. Once the instrument is connected and turned on, it will appear as an active device on your network without any extra set up steps or lengthy procedures.

Note **Check the INET settings the first time you power up your calibrator after it has been physically connected to the LAN/Internet to ensure that the DHCP has successfully downloaded the appropriate information from your network server(s).**

Table 5-3: LAN/Internet Configuration Properties

PROPERTY	DEFAULT STATE	DESCRIPTION
DHCP STATUS	On	This displays whether the DHCP is turned ON or OFF.
INSTRUMENT IP ADDRESS	0.0.0.0	This string of four packets of 1 to 3 numbers each (e.g. 192.168.76.55.) is the address of the calibrator itself.
GATEWAY IP ADDRESS	0.0.0.0	A string of numbers very similar to the Instrument IP address (e.g. 192.168.76.1.) that is the address of the computer used by your LAN to access the Internet.
SUBNET MASK	0.0.0.0	Also, a string of four packets of 1 to 3 numbers each (e.g. 255.255.252.0) that defines that identifies the LAN to which the device is connected. All addressable devices and computers on a LAN must have the same subnet mask. Any transmissions sent devices with different subnet masks are assumed to be outside of the LAN and are routed through a different gateway computer onto the Internet.
TCP PORT[1]	**3000**	This number defines the terminal control port by which the instrument is addressed by terminal emulation software, such as Internet or Teledyne API's APICOM.
HOST NAME	**T700**	The name by which your calibrator will appear when addressed from other computers on the LAN or via the Internet. While the default setting for all Teledyne API's T700 calibrators is "T700", the host name may be changed to fit customer needs.
[1] Do not change the setting for this property unless instructed to by Teledyne API's Technical Support team.		

Note **If the gateway IP, instrument IP and the subnet mask are all zeroes (e.g. "0.0.0.0"), the DCHP was not successful in which case you may have to configure the calibrator's Ethernet properties manually. See your network administrator.**

To view the above properties listed in Table 5-3, press:

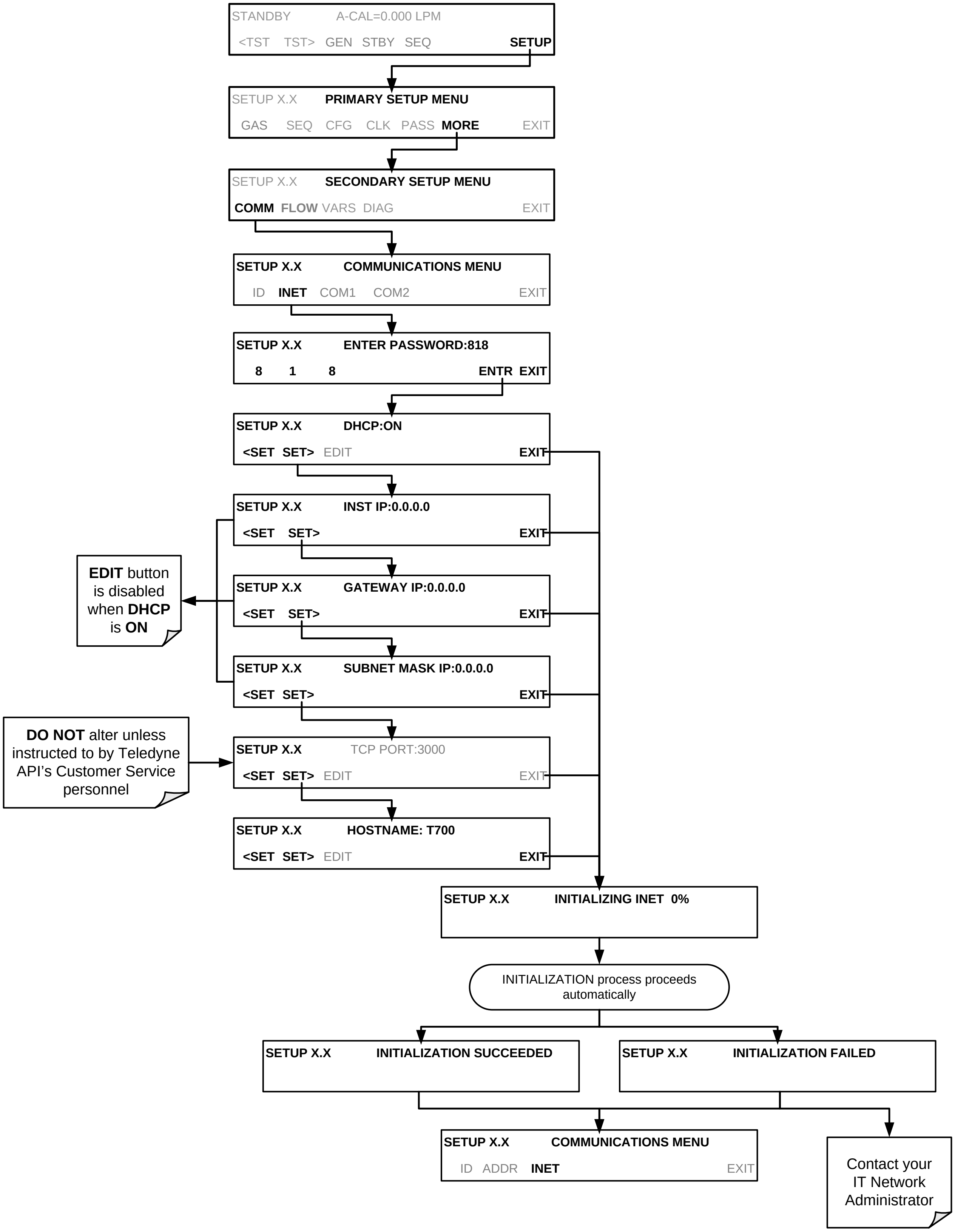
STANDBY A-CAL=0.000 LPM
<TST TST> GEN STBY SEQ SETUP
SETUP X.X PRIMARY SETUP MENU
GAS SEQ CFG CLK PASS MORE EXIT
SETUP X.X SECONDARY SETUP MENU
COMM FLOW VARS DIAG EXIT
SETUP X.X COMMUNICATIONS MENU
ID INET COM1 COM2 EXIT
SETUP X.X ENTER PASSWORD:818
8 1 8 ENTR EXIT
SETUP X.X DHCP:ON
<SET SET> EDIT EXIT
SETUP X.X INST IP:0.0.0.0
<SET SET> EXIT
SETUP X.X GATEWAY IP:0.0.0.0
<SET SET> EXIT
SETUP X.X SUBNET MASK IP:0.0.0.0
<SET SET> EXIT
SETUP X.X TCP PORT:3000
<SET SET> EDIT EXIT
SETUP X.X HOSTNAME: T700
<SET SET> EDIT EXIT
SETUP X.X INITIALIZING INET 0%
INITIALIZATION process proceeds automatically
SETUP X.X INITIALIZATION SUCCEEDED
SETUP X.X INITIALIZATION FAILED
SETUP X.X COMMUNICATIONS MENU
ID ADDR INET EXIT

EDIT button is disabled when **DHCP** is **ON**

DO NOT alter unless instructed to by Teledyne API's Customer Service personnel

Contact your IT Network Administrator

5.4.1.1. **Manually Configuring the Network IP Addresses**

There are several circumstances when you may need to manually set the Ethernet configuration:

- Your LAN is not running a DHCP software package,
- The DHCP software is unable to initialize the calibrator’s interface;
- You wish to configure the interface with a specific IP address, such as for a permanent Ethernet connection..

Manually configuring the Ethernet interface requires that you first turn DHCP to OFF before setting the **INSTRUMENT IP**, **GATEWAY IP** and **SUBNET MASK** parameters:

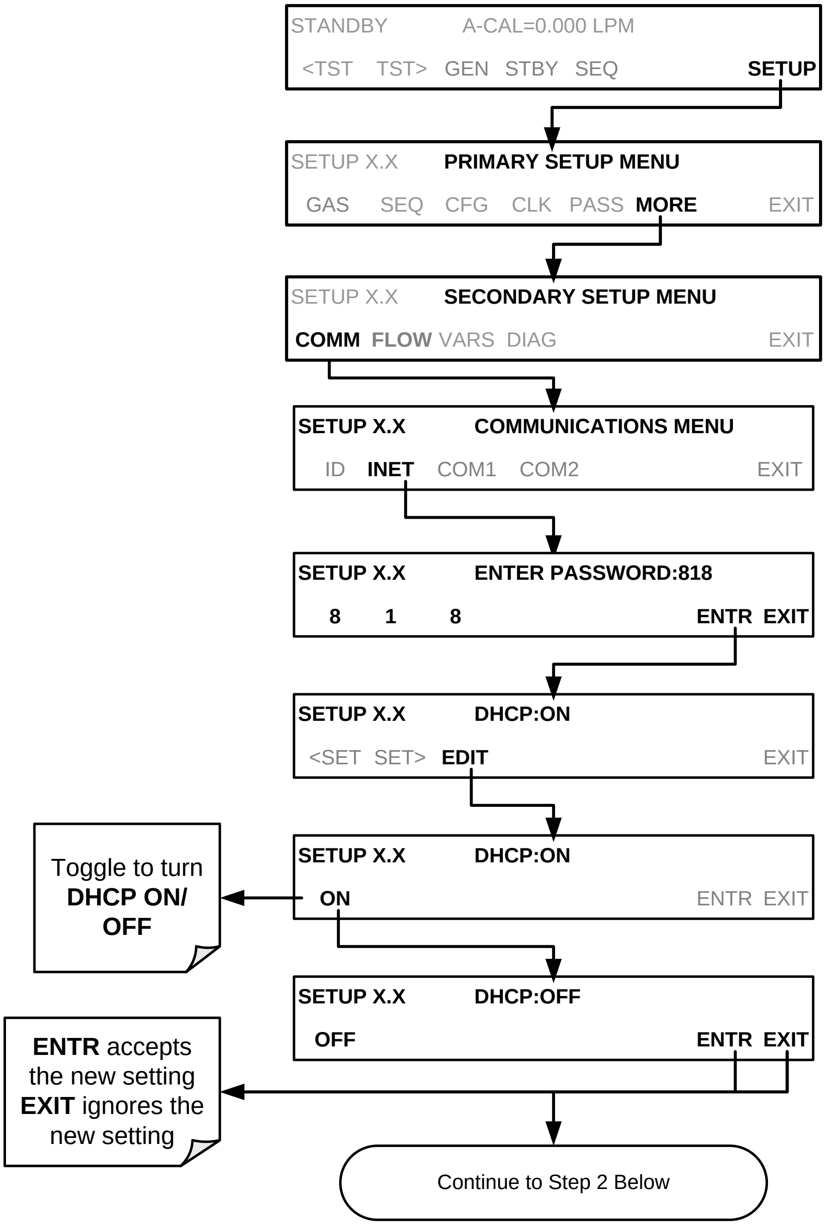
STANDBY A-CAL=0.000 LPM
<TST TST> GEN STBY SEQ SETUP
SETUP X.X PRIMARY SETUP MENU
GAS SEQ CFG CLK PASS MORE EXIT
SETUP X.X SECONDARY SETUP MENU
COMM FLOW VARS DIAG EXIT
SETUP X.X COMMUNICATIONS MENU
ID INET COM1 COM2 EXIT
SETUP X.X ENTER PASSWORD:818
8 1 8 ENTR EXIT
SETUP X.X DHCP:ON
<SET SET> EDIT EXIT
SETUP X.X DHCP:ON
ON ENTR EXIT
Toggle to turn DHCP ON/ OFF
SETUP X.X DHCP:OFF
OFF ENTR EXIT
ENTR accepts the new setting EXIT ignores the new setting
Continue to Step 2 Below

Internet Configuration Touchscreen Button Functions

BUTTON	FUNCTION
[0]	Press to cycle through the range of numerals and available characters (“**0 – 9”** & **“ . ”**)
<CH CH>	Moves the cursor one character left or right.
DEL	Deletes a character at the cursor location.
ENTR	Accepts the new setting and returns to the previous menu.
EXIT	Ignores the new setting and returns to the previous menu.
Some buttons only appear when applicable.	

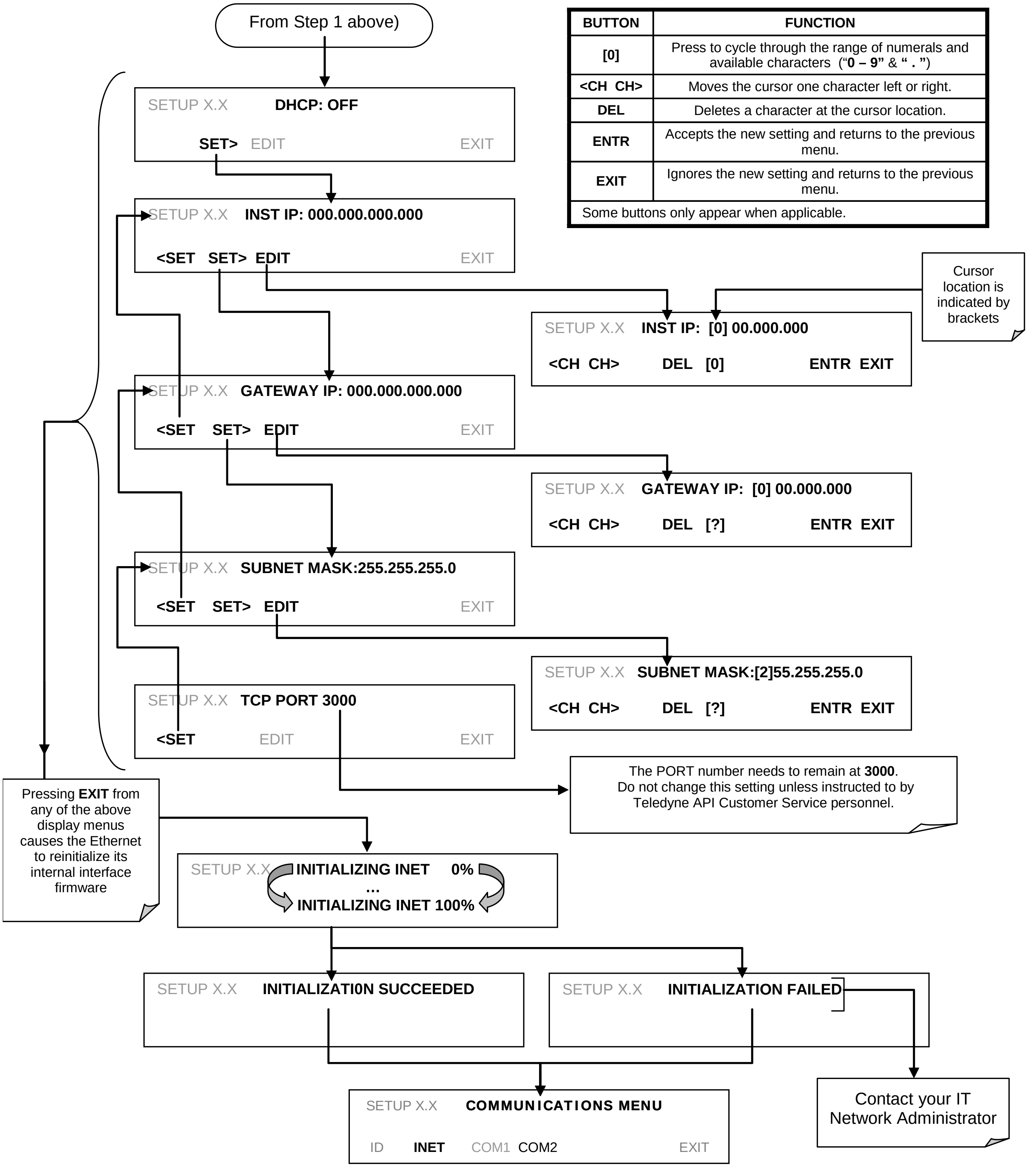
From Step 1 above)
SETUP X.X DHCP: OFF
SET> EDIT EXIT
SETUP X.X INST IP: 000.000.000.000
<SET SET> EDIT EXIT
SETUP X.X INST IP: [0] 00.000.000
<CH CH> DEL [0] ENTR EXIT
SETUP X.X GATEWAY IP: 000.000.000.000
<SET SET> EDIT EXIT
SETUP X.X GATEWAY IP: [0] 00.000.000
<CH CH> DEL [?] ENTR EXIT
SETUP X.X SUBNET MASK:255.255.255.0
<SET SET> EDIT EXIT
SETUP X.X SUBNET MASK:[2]55.255.255.0
<CH CH> DEL [?] ENTR EXIT
SETUP X.X TCP PORT 3000
<SET EDIT EXIT
SETUP X.X INITIALIZING INET 0%
...
INITIALIZING INET 100%
SETUP X.X INITIALIZATI0N SUCCEEDED
SETUP X.X INITIALIZATION FAILED
SETUP X.X COMMUNICATIONS MENU
ID INET COM1 COM2 EXIT
Contact your IT Network Administrator

Cursor location is indicated by brackets

The PORT number needs to remain at **3000**. Do not change this setting unless instructed to by Teledyne API Customer Service personnel.

Pressing **EXIT** from any of the above display menus causes the Ethernet to reinitialize its internal interface firmware

5.4.2. CHANGING THE CALIBRATOR’S HOSTNAME

The **HOSTNAME** is the name by which the calibrator appears on your network. The default name for all Teledyne API’s T700 calibrators is **T700**. To change this name (particularly if you have more than one T700 calibrator on your network), press.

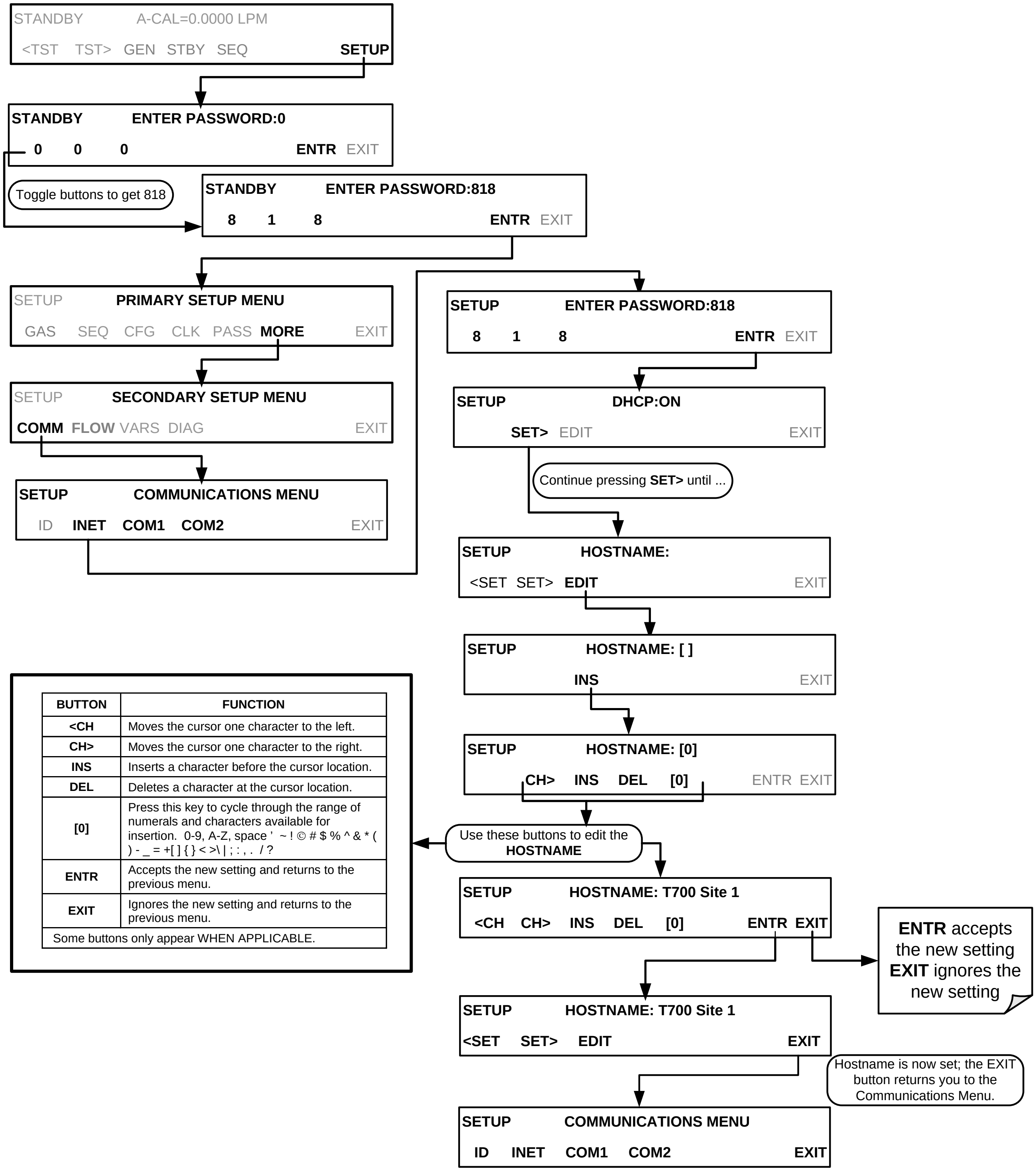
STANDBY A-CAL=0.0000 LPM
<TST TST> GEN STBY SEQ SETUP
STANDBY ENTER PASSWORD:0
0 0 0 ENTR EXIT
STANDBY ENTER PASSWORD:818
8 1 8 ENTR EXIT
SETUP PRIMARY SETUP MENU
GAS SEQ CFG CLK PASS MORE EXIT
SETUP SECONDARY SETUP MENU
COMM FLOW VARS DIAG EXIT
SETUP COMMUNICATIONS MENU
ID INET COM1 COM2 EXIT
SETUP ENTER PASSWORD:818
8 1 8 ENTR EXIT
SETUP DHCP:ON
SET> EDIT EXIT
SETUP HOSTNAME:
<SET SET> EDIT EXIT
SETUP HOSTNAME: [ ]
INS EXIT
SETUP HOSTNAME: [0]
CH> INS DEL [0] ENTR EXIT
SETUP HOSTNAME: T700 Site 1
<CH CH> INS DEL [0] ENTR EXIT
SETUP HOSTNAME: T700 Site 1
<SET SET> EDIT EXIT
SETUP COMMUNICATIONS MENU
ID INET COM1 COM2 EXIT

Toggle buttons to get 818

Continue pressing **SET>** until ...

Use these buttons to edit the **HOSTNAME**

BUTTON	FUNCTION
<CH	Moves the cursor one character to the left.
CH>	Moves the cursor one character to the right.
INS	Inserts a character before the cursor location.
DEL	Deletes a character at the cursor location.
[0]	Press this key to cycle through the range of numerals and characters available for insertion. 0-9, A-Z, space ' ~ ! © # $ % ^ & * ( ) - _ = +[ ] { } < >\ | ; : , . / ?
ENTR	Accepts the new setting and returns to the previous menu.
EXIT	Ignores the new setting and returns to the previous menu.
Some buttons only appear WHEN APPLICABLE.	

ENTR accepts the new setting **EXIT** ignores the new setting

Hostname is now set; the EXIT button returns you to the Communications Menu.

5.4.3. **USB PORT (OPTION) FOR REMOTE ACCESS**

The analyzer can be operated through a personal computer by downloading the TAPI USB driver and directly connecting their respective USB ports.

1. Install the Teledyne T-Series USB driver on your computer, downloadable from the Teledyne API website under Help Center>Software Downloads (www.teledyne-api.com/software).
2. Run the installer file: “TAPIVCPInstaller.exe”

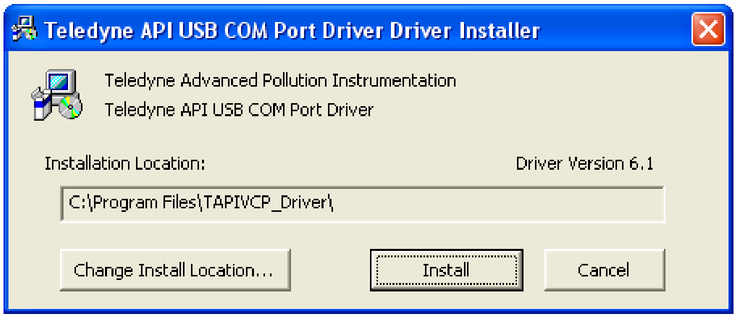

Teledyne API USB COM Port Driver Driver Installer

Teledyne Advanced Pollution Instrumentation
Teledyne API USB COM Port Driver

Installation Location: Driver Version 6.1

C:\Program Files\TAPIVCP_Driver\

3. Connect the USB cable between the USB ports on your personal computer and your analyzer. The USB cable should be a Type A – Type B cable, commonly used as a USB printer cable.
4. Determine the Windows XP Com Port number that was automatically assigned to the USB connection. (Start → Control Panel → System → Hardware → Device Manager). This is the com port that should be set in the communications software, such as APIcom or Hyperterminal.

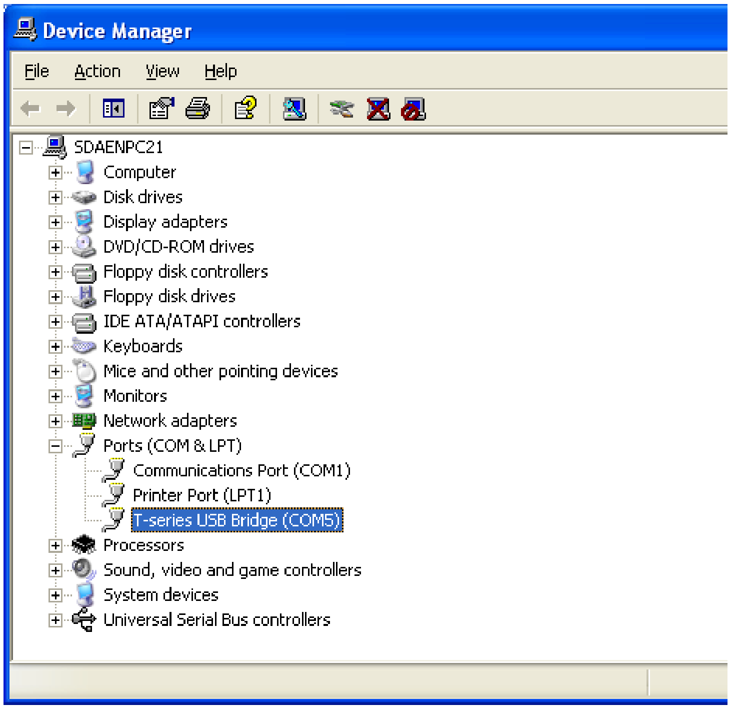

Device Manager

- SDAENPC21
  - Computer
  - Disk drives
  - Display adapters
  - DVD/CD-ROM drives
  - Floppy disk controllers
  - Floppy disk drives
  - IDE ATA/ATAPI controllers
  - Keyboards
  - Mice and other pointing devices
  - Monitors
  - Network adapters
  - Ports (COM & LPT)
    - Communications Port (COM1)
    - Printer Port (LPT1)
    - T-series USB Bridge (COM5)
  - Processors
  - Sound, video and game controllers
  - System devices
  - Universal Serial Bus controllers

Refer to the Quick Start (*Direct Cable Connection*) section of the Teledyne APIcom Manual, PN 07463.

5. In the instrument's SETUP>MORE>COMM>COM2 menu, make the following settings:

   Baud Rate: 115200

   COM2 Mode Settings:

Quiet Mode	ON	Computer Mode	ON
MODBUS RTU	OFF	MODBUS ASCII	OFF
E,8,1 MODE	OFF	E,7,1 MODE	OFF
RS-485 MODE	OFF	SECURITY MODE	OFF
MULTIDROP MODE	OFF	ENABLE MODEM	OFF
ERROR CHECKING	ON	XON/XOFF HANDSHAKE	OFF
HARDWARE HANDSHAKE	OFF	HARDWARE FIFO	ON
COMMAND PROMPT	OFF		

6. Next, configure your communications software, such as APIcom. Use the COM port determined in Step 4 and the baud rate set in Step 5. The figures below show how these parameters would be configured in the Instrument Properties window in APIcom when configuring a new instrument. See the APIcom manual (PN 07463) for more details.

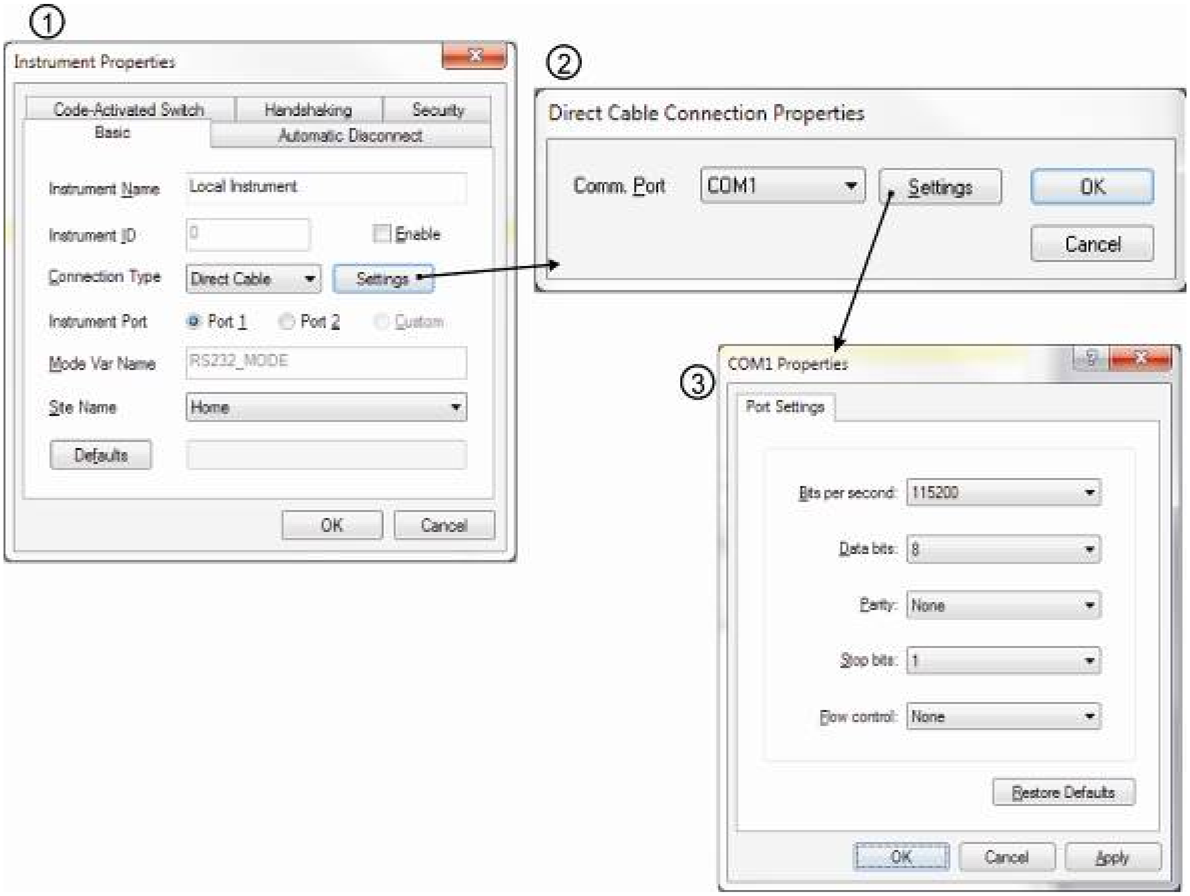
①
Instrument Properties
Code-Activated Switch
Handshaking
Security
Basic
Automatic Disconnect
Settings
Defaults
OK
Cancel
②
Direct Cable Connection Properties
Settings
OK
Cancel
③
COM1 Properties
Port Settings
Restore Defaults
OK
Cancel
Apply

Instrument Name: Local Instrument
Instrument ID: 0 ☐ Enable
Connection Type: Direct Cable
Instrument Port: ● Port 1 ○ Port 2 ○ Custom
Mode Var Name: RS232_MODE
Site Name: Home

Comm. Port: COM1

Bits per second: 115200
Data bits: 8
Parity: None
Stop bits: 1
Flow control: None

Note

- **USB configuration requires that the baud rates of the instrument and the PC match; check the PC baud rate and change if needed.**
- **Using the USB port disallows use of the rear panel COM2 port except for multidrop communication.**

6. REMOTE OPERATION

This section provides information needed when using external digital and serial I/O for remote operation. It assumes that the electrical connections have been made as described in Section3.3.1

The T700 can be remotely configured, calibrated or queried for stored data th through the rear panel serial ports, via either **Computer mode** (using a personal computer with a dedicated interface program) or **Interactive mode** (using a terminal emulation program).

6.1. COMPUTER MODE

Computer mode is used when the analyzer is connected to a computer with a dedicated interface program such as APICOM.

6.1.1. REMOTE CONTROL VIA APICOM

APICOM is an easy-to-use, yet powerful interface program that allows the user to access and control any of Teledyne API's main line of ambient and stack-gas instruments from a remote connection through direct cable, modem or Ethernet. Running APICOM, a user can:

- Establish a link from a remote location to the T700 through direct cable connection via RS-232 modem or Ethernet.
- View the instrument's front panel and remotely access all functions that could be accessed when standing in front of the instrument.
- Remotely edit system parameters and set points.
- Download, view, graph and save data for predictive diagnostics or data analysis.
- Check on system parameters for trouble-shooting and quality control.

APICOM is very helpful for initial setup, data analysis, maintenance and trouble-shooting. Figure 6-1 shows an example of APICOM's main interface, which emulates the look and functionality of the instrument's actual front panel. Refer to the APICOM manual available for download from http://www.teledyne-api.com/software/apicom/.

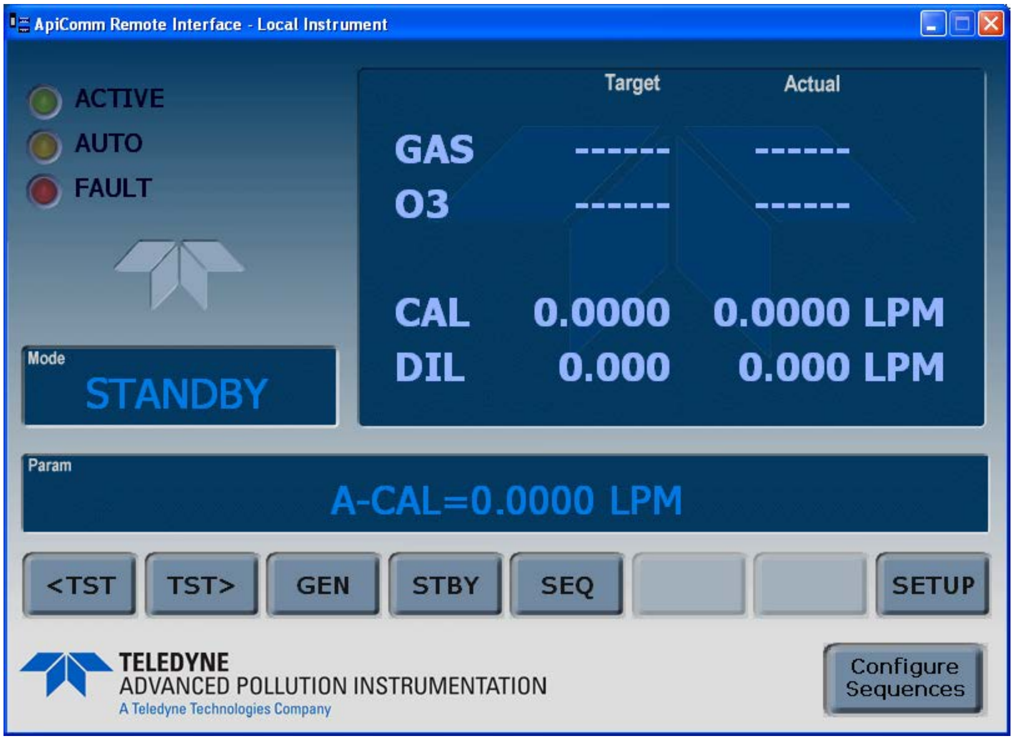
ApiComm Remote Interface - Local Instrument
ACTIVE
AUTO
FAULT
<TST
TST>
GEN
STBY
SEQ
SETUP
TELEDYNE
ADVANCED POLLUTION INSTRUMENTATION
A Teledyne Technologies Company
Configure Sequences

	Target	Actual
GAS	------	------
O3	------	------
CAL	0.0000	0.0000 LPM
DIL	0.000	0.000 LPM

Mode STANDBY

Param A-CAL=0.0000 LPM

Figure 6-1: APICOM Remote Control Program Interface

6.2. INTERACTIVE MODE

Interactive mode is used with a terminal emulation programs or a “dumb” computer terminal.

6.2.1. REMOTE CONTROL VIA A TERMINAL EMULATION PROGRAM

Start a terminal emulation program such as HyperTerminal. All configuration commands must be created following a strict syntax or be pasted in from an existing text file, which was edited offline and then uploaded through a specific transfer procedure. The commands that are used to operate the analyzer in this mode are listed in Table 6-1.

6.2.1.1. Help Commands in Interactive Mode

Table 6-1: Terminal Mode Software Commands

COMMAND	Function
Control-T	Switches the calibrator to terminal mode (echo, edit). If mode flags 1 & 2 are OFF, the interface can be used in interactive mode with a terminal emulation program.
Control-C	Switches the calibrator to computer mode (no echo, no edit).
CR (carriage return)	A carriage return is required after each command line is typed into the terminal/computer. The command will not

COMMAND	Function
	be sent to the calibrator to be executed until this is done. On personal computers, this is achieved by pressing the ENTER button.
BS **(backspace)**	Erases one character to the left of the cursor location.
ESC **(escape)**	Erases the entire command line.
? [ID] CR	This command prints a complete list of available commands along with the definitions of their functionality to the display device of the terminal or computer being used. The ID number of the calibrator is only necessary if multiple calibrators are on the same communications line, such as the multi-drop setup.
Control-C	Pauses the listing of commands.
Control-P	Restarts the listing of commands.

6.2.1.2. **Command Syntax**

Commands are not case-sensitive and all arguments within one command (i.e. ID numbers, keywords, data values, etc.) must be separated with a space character.

All Commands follow the syntax:

```
X [ID] COMMAND <CR>
```

Where

X	is the command type (one letter) that defines the type of command. Allowed designators are listed in Table 6-2 and Appendix A-6.
[ID]	is the machine identification number (Section4.7.1). Example: the Command “? 700” followed by a carriage return would print the list of available commands for the revision of software currently installed in the instrument assigned ID Number 700.
COMMAND	is the command designator: This string is the name of the command being issued (LIST, ABORT, NAME, EXIT, etc.). Some commands may have additional arguments that define how the command is to be executed. Press ? <CR> or refer to Appendix A-6 for a list of available command designators.
<CR>	is a carriage return. All commands must be terminated by a carriage return (usually achieved by pressing the ENTER button on a computer).

Table 6-2: Teledyne API Serial I/O Command Types

COMMAND	COMMAND TYPE
C	Calibration
D	Diagnostic
L	Logon
T	Test measurement
V	Variable
W	Warning

6.2.1.3. Data Types

Data types consist of integers, hexadecimal integers, floating-point numbers, Boolean expressions and text strings.

- Integer data are used to indicate integral quantities such as a number of records, a filter length, etc. They consist of an optional plus or minus sign, followed by one or more digits. For example, *+1*, *-12*, *123* are all valid integers.
- Hexadecimal integer data are used for the same purposes as integers. They consist of the two characters “0x,” followed by one or more hexadecimal digits (0-9, A-F, a-f), which is the ‘C’ programming language convention. No plus or minus sign is permitted. For example, *0x1*, *0x12*, *0x1234abcd* are all valid hexadecimal integers.
- Floating-point numbers are used to specify continuously variable values such as temperature set points, time intervals, warning limits, voltages, etc. They consist of an optional plus or minus sign, followed by zero or more digits, an optional decimal point and zero or more digits. (At least one digit must appear before or after the decimal point.) Scientific notation is not permitted. For example, *+1.0*, *1234.5678*, *-0.1*, *1* are all valid floating-point numbers.
- Boolean expressions are used to specify the value of variables or I/O signals that may assume only two values. They are denoted by the keywords *ON* and *OFF*.
- Text strings are used to represent data that cannot be easily represented by other data types, such as data channel names, which may contain letters and numbers. They consist of a quotation mark, followed by one or more printable characters, including spaces, letters, numbers, and symbols, and a final quotation mark. For example, *“a”*, *“1”*, *“123abc”*, and *“()[]<>”* are all valid text strings. It is not possible to include a quotation mark character within a text string.
- Some commands allow you to access variables, messages, and other items. When using these commands, you must type the entire name of the item; you cannot abbreviate any names.

6.2.1.4. Status Reporting

Reporting of status messages as an audit trail is one of the three principal uses for the RS-232 interface (the other two being the command line interface for controlling the instrument and the download of data in electronic format). You can effectively disable the reporting feature by setting the interface to quiet mode (Section 5.2.1, Table 5-1).

Status reports include warning messages, calibration and diagnostic status messages. Refer to Appendix A-3 for a list of the possible messages, and this for information on controlling the instrument through the RS-232 interface.

6.2.1.5. General Message Format

All messages from the instrument (including those in response to a command line request) are in the format:

```
X DDD:HH:MM [Id] MESSAGE<CRLF>
```

Where:

X	is a command type designator, a single character indicating the message type, as shown in the Table 6-2.
DDD:HH:MM	is the time stamp, the date and time when the message was issued. It consists of the Day-of-year (DDD) as a number from 1 to 366, the hour of the day (HH) as a number from 00 to 23, and the minute (MM) as a number from 00 to 59.
[ID]	is the calibrator ID, a number with 1 to 4 digits.
MESSAGE	is the message content that may contain warning messages, test measurements, variable values, etc.
<CRLF>	is a carriage return / line feed pair, which terminates the message.

The uniform nature of the output messages makes it easy for a host computer to parse them into an easy structure. Keep in mind that the front panel display does not give any information on the time a message was issued, hence it is useful to log such messages for trouble-shooting and reference purposes. Terminal emulation programs such as HyperTerminal can capture these messages to text files for later review.

6.3. REMOTE ACCESS BY MODEM

The T700 can be connected to a modem for remote access. This requires a cable between the calibrator's COMM port and the modem, typically a DB-9F to DB-25M cable (available from Teledyne API with P/N WR0000024).

Once the cable has been connected, check to ensure that:

- The DTE-DCE is in the DCE position.
- The T700 COMM port is set for a baud rate that is compatible with the modem.
- The Modem is designed to operate with an 8-bit word length with one stop bit.
- The M**ODEM ENABLE** communication mode is turned **ON** (Mode 64, see Section 5.2.1).

Once this is completed, the appropriate setup command line for your modem can be entered into the calibrator. The default setting for this feature is:

AT Y0 &D0 &H0 &I0 S0=2 &B0 &N6 &M0 E0 Q1 &W0

This string can be altered to match your modem's initialization and can be up to 100 characters long.

To change this setting, press:

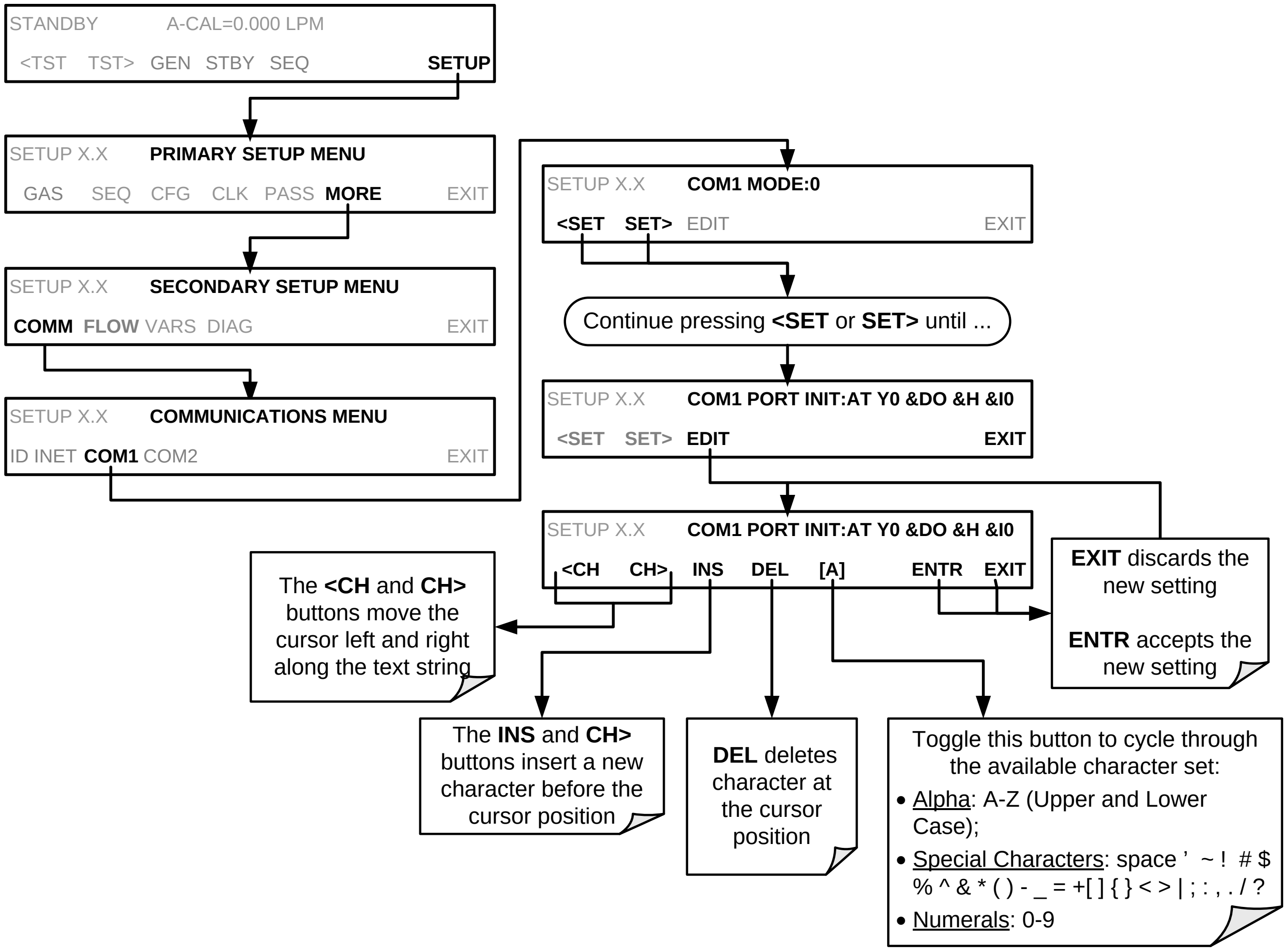
STANDBY A-CAL=0.000 LPM
<TST TST> GEN STBY SEQ SETUP
SETUP X.X PRIMARY SETUP MENU
GAS SEQ CFG CLK PASS MORE EXIT
SETUP X.X SECONDARY SETUP MENU
COMM FLOW VARS DIAG EXIT
SETUP X.X COMMUNICATIONS MENU
ID INET COM1 COM2 EXIT
SETUP X.X COM1 MODE:0
<SET SET> EDIT EXIT
Continue pressing <SET or SET> until ...
SETUP X.X COM1 PORT INIT:AT Y0 &DO &H &I0
<SET SET> EDIT EXIT
SETUP X.X COM1 PORT INIT:AT Y0 &DO &H &I0
<CH CH> INS DEL [A] ENTR EXIT
The <CH and CH> buttons move the cursor left and right along the text string
The INS and CH> buttons insert a new character before the cursor position
DEL deletes character at the cursor position
Toggle this button to cycle through the available character set:
• Alpha: A-Z (Upper and Lower Case);
• Special Characters: space ' ~ ! # $ % ^ & * ( ) - _ = +[ ] { } < > | ; : , . / ?
• Numerals: 0-9
EXIT discards the new setting
ENTR accepts the new setting

To initialize the modem, press:

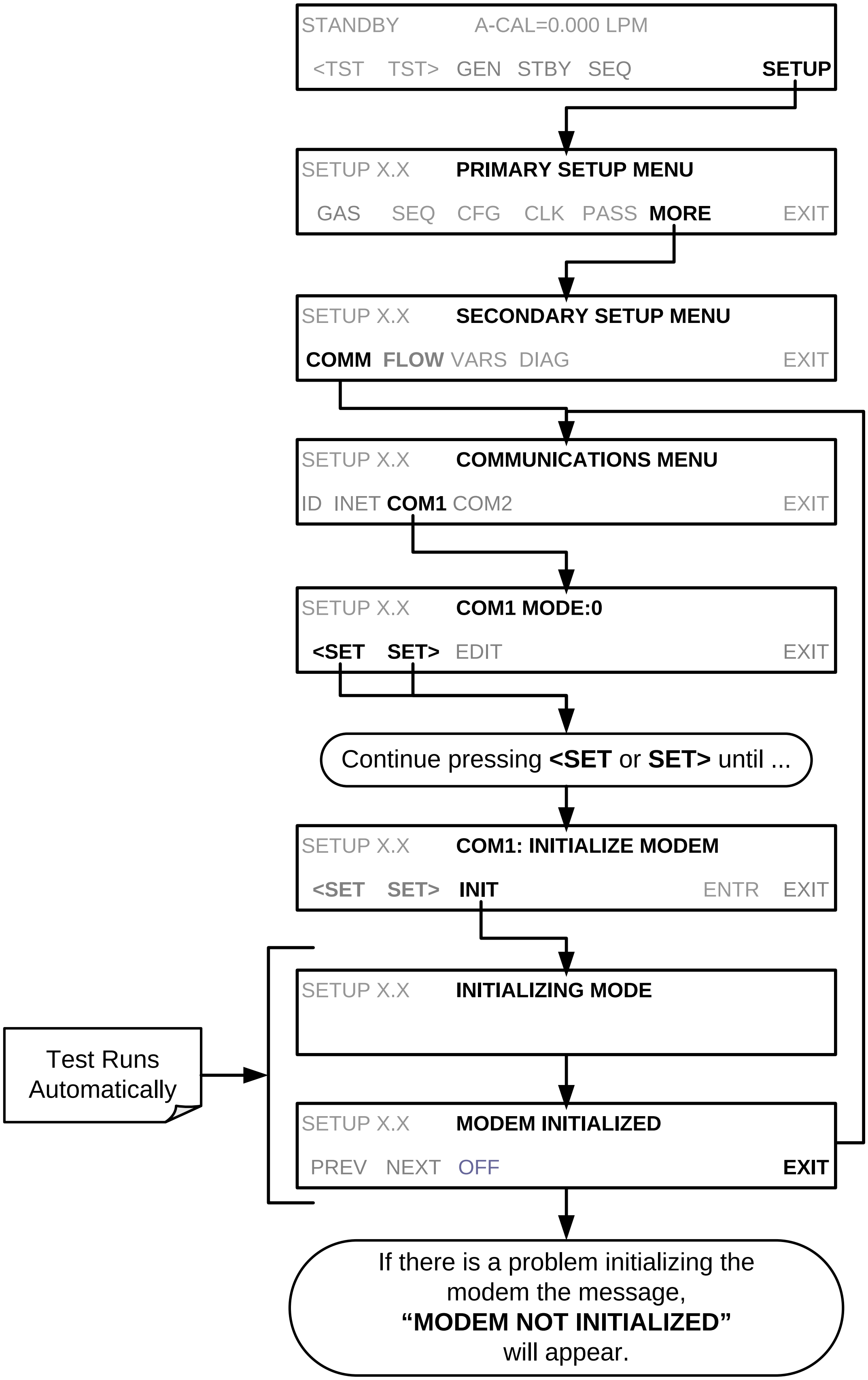
STANDBY A-CAL=0.000 LPM
<TST TST> GEN STBY SEQ SETUP
SETUP X.X PRIMARY SETUP MENU
GAS SEQ CFG CLK PASS MORE EXIT
SETUP X.X SECONDARY SETUP MENU
COMM FLOW VARS DIAG EXIT
SETUP X.X COMMUNICATIONS MENU
ID INET COM1 COM2 EXIT
SETUP X.X COM1 MODE:0
<SET SET> EDIT EXIT
Continue pressing <SET or SET> until ...
SETUP X.X COM1: INITIALIZE MODEM
<SET SET> INIT ENTR EXIT
SETUP X.X INITIALIZING MODE
SETUP X.X MODEM INITIALIZED
PREV NEXT OFF EXIT
Test Runs Automatically
If there is a problem initializing the modem the message, "MODEM NOT INITIALIZED" will appear.

6.4. PASSWORD SECURITY FOR SERIAL REMOTE COMMUNICATIONS

In order to provide security for remote access of the T700, a LOGON feature can be enabled to require a password before the instrument will accept commands. This is done by turning on the **SECURITY MODE** (Mode 4, Section 5.2.1). Once the **SECURITY MODE** is enabled, the following items apply.

- A password is required before the port will respond or pass on commands.
- If the port is inactive for one hour, it will automatically logoff, which can also be achieved with the LOGOFF command.
- Three unsuccessful attempts to log on with an incorrect password will cause subsequent logins to be disabled for 1 hour, even if the correct password is used.
- If not logged on, the only active command is the '?' request for the help screen.
- The following messages will be returned at logon:
  - LOGON SUCCESSFUL - Correct password given
  - LOGON FAILED - Password not given or incorrect
  - LOGOFF SUCCESSFUL - Connection terminated successfully

To log on to the T700 calibrator with **SECURITY MODE** feature enabled, type:

```
LOGON 940331
```

940331 is the default password. To change the default password, use the variable RS232_PASS issued as follows:

```
V RS232_PASS=NNNNNN
```

Where N is any numeral between 0 and 9.

7. CALIBRATION AND VERIFICATION

Basic electronic calibration of the T700 Dynamic Dilution Calibrator is performed at the factory. Normally there is no need to perform this factory calibration in the field however, the performance of several of the instrument's key subsystems should be verified periodically and if necessary adjusted. These subsystems are:

- Mass Flow Controllers: The accuracy of the mass flow controller outputs is intrinsic to achieving the correct calibration mixture concentrations, therefore the accuracy of their output should be checked and if necessary adjusted every 6 months (see Sections 7.1 and 7.2).
- O_3 Photometer: If your T700 is equipped with the optional O_3 photometer its performance should be periodically verified against and external transfer standard (see Section 7.3).
- O_3 Generator: If your T700 is equipped with the optional O_3 generator, it should be periodically calibrated (see Section 7.4).

7.1. VIEWING THE PERFORMANCE STATISTICS FOR THE T700'S MFC'S

It is possible to view the target flow rate, actual flow rate and actual gas pressure for each MFC via the **FLOW** submenu in the T700 calibrator (in real time). To access this information, press:

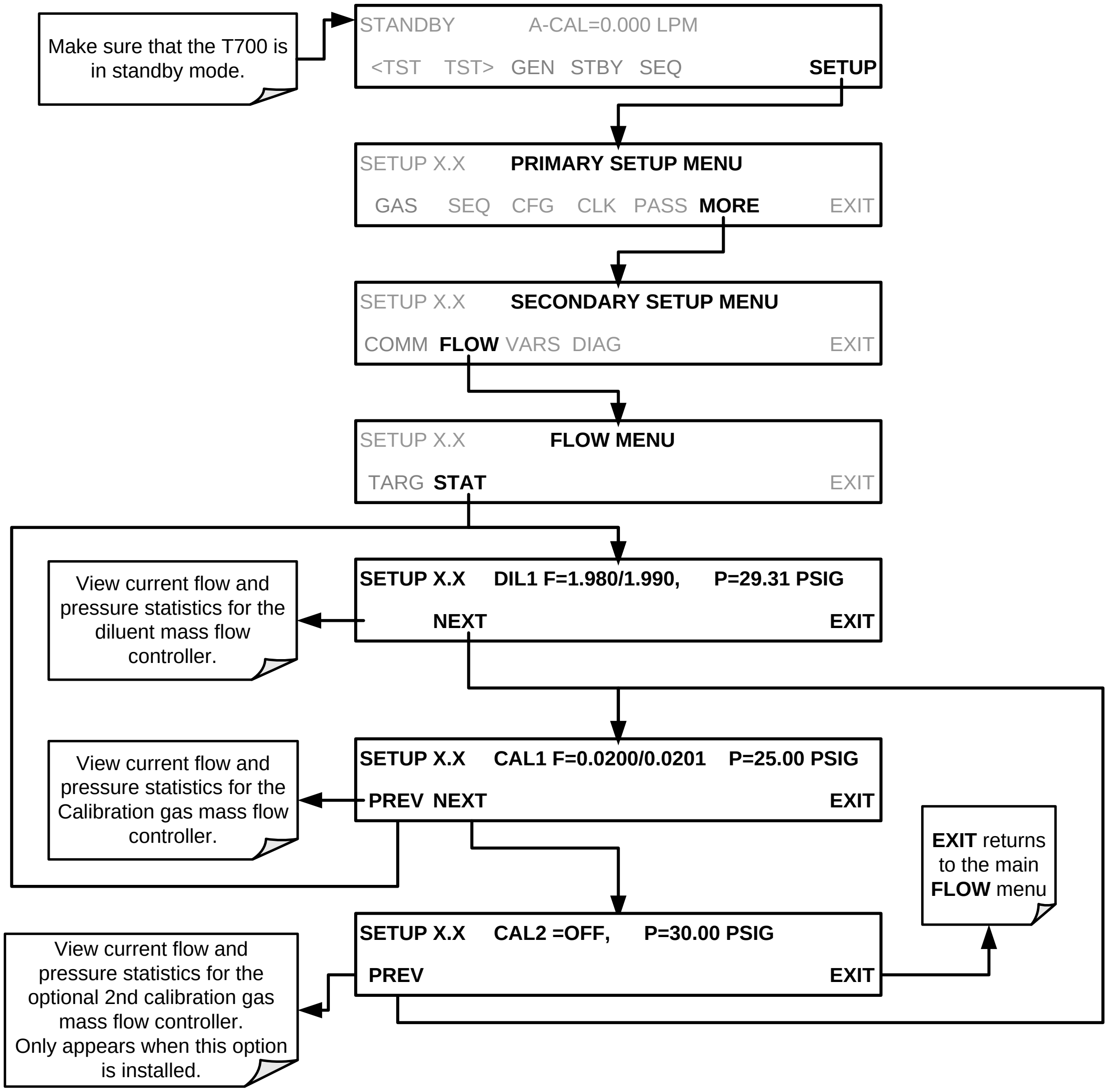
Make sure that the T700 is in standby mode.
STANDBY A-CAL=0.000 LPM
<TST TST> GEN STBY SEQ SETUP
SETUP X.X PRIMARY SETUP MENU
GAS SEQ CFG CLK PASS MORE EXIT
SETUP X.X SECONDARY SETUP MENU
COMM FLOW VARS DIAG EXIT
SETUP X.X FLOW MENU
TARG STAT EXIT
SETUP X.X DIL1 F=1.980/1.990, P=29.31 PSIG
NEXT EXIT
View current flow and pressure statistics for the diluent mass flow controller.
SETUP X.X CAL1 F=0.0200/0.0201 P=25.00 PSIG
PREV NEXT EXIT
View current flow and pressure statistics for the Calibration gas mass flow controller.
EXIT returns to the main FLOW menu
SETUP X.X CAL2 =OFF, P=30.00 PSIG
PREV EXIT
View current flow and pressure statistics for the optional 2nd calibration gas mass flow controller.
Only appears when this option is installed.

In the displays associated with the **FLOW** > **STAT** submenu:

- The numbers after “F=” are the flow.
- The first number is the target flow.
- The second is the actual flow.
- The number after “P=” is pressure in PSIG.
- If an MFC is off, its flows are displayed as OFF.

7.2. CALIBRATING THE OUTPUT OF THE T700’S MFC’S

A table exists in the memory of the T700’s for each MFC that sets the output of the MFC at each of 20 equally spaced control points along its entire performance range. This table may be accesses via the **DIAG** > **MFC CONFIGURATION** submenu (see Section 7.2.2).

For each calibration point, the following is displayed:

- The drive voltage in 20 equal, incremental steps from 0 mVDC to 5000 mVDC;
- The expected flow rate corresponding to each drive voltage point (each equal to1/20th of the full scale for the selected mass flow controller).

This table can also be used to calibrate the output of the MFCs by adjusting either the control voltage of a point or its associated flow output value (see Section 7.2.2).

Table 7-1: Examples of MFC Calibration Points

CAL POINT	DRIVE VOLTAGE	MFC FULL SCALE			
		1.0 LPM	3.0 LPM	5.0 LPM	10.0 LPM
		MFC TARGET OUTPUT			
0	000 mV	0.000	0.000	0.000	0.000
1	250 mV	0.050	0.150	0.250	0.500
2	500 mV	0.100	0.300	0.500	1.000
3	750 mV	0.150	0.450	0.750	1.500
4	1000 mV	0.200	0.600	1.000	2.000
5	1250 mV	0.250	0.750	1.250	2.500
6	1500 mV	0.300	0.900	1.500	3.000
7	1750 mV	0.350	1.050	1.750	3.500
8	2000 mV	0.400	1.200	2.000	4.000
9	2250 mV	0.450	1.350	2.250	4.500
10	2500 mV	0.500	1.500	2.500	5.000
11	2750 mV	0.550	1.650	2.750	5.500
12	3000 mV	0.600	1.800	3.000	6.000
13	3250 mV	0.650	1.950	3.250	6.500
14	3500 mV	0.700	2.100	3.500	7.000
15	3750 mV	0.750	2.250	3.750	7.500
16	4000 mV	0.800	2.400	4.000	8.000
17	4250 mV	0.850	2.550	4.250	8.500
18	4500 mV	0.900	2.700	4.500	9.000
19	4750 mV	0.950	2.850	4.750	9.500
20	5000 mV	1.000	3.000	5.000	10.000

7.2.1. SETUP FOR VERIFICATION AND CALIBRATION OF THE T700'S MFC'S

Note **A separate flow meter is required for the procedure.**

1. Turn off the T700 Dynamic Dilution Calibrator.
2. Open the front panel to the T700 calibrator. This is the easiest access to the MFC output ports.
   - A locking screw located at the top center of the front panel (See Figure 3-1) must be removed before the panel can be opened.
3. Attach the flow meter directly to the output port of the MFC to be checked/tested.

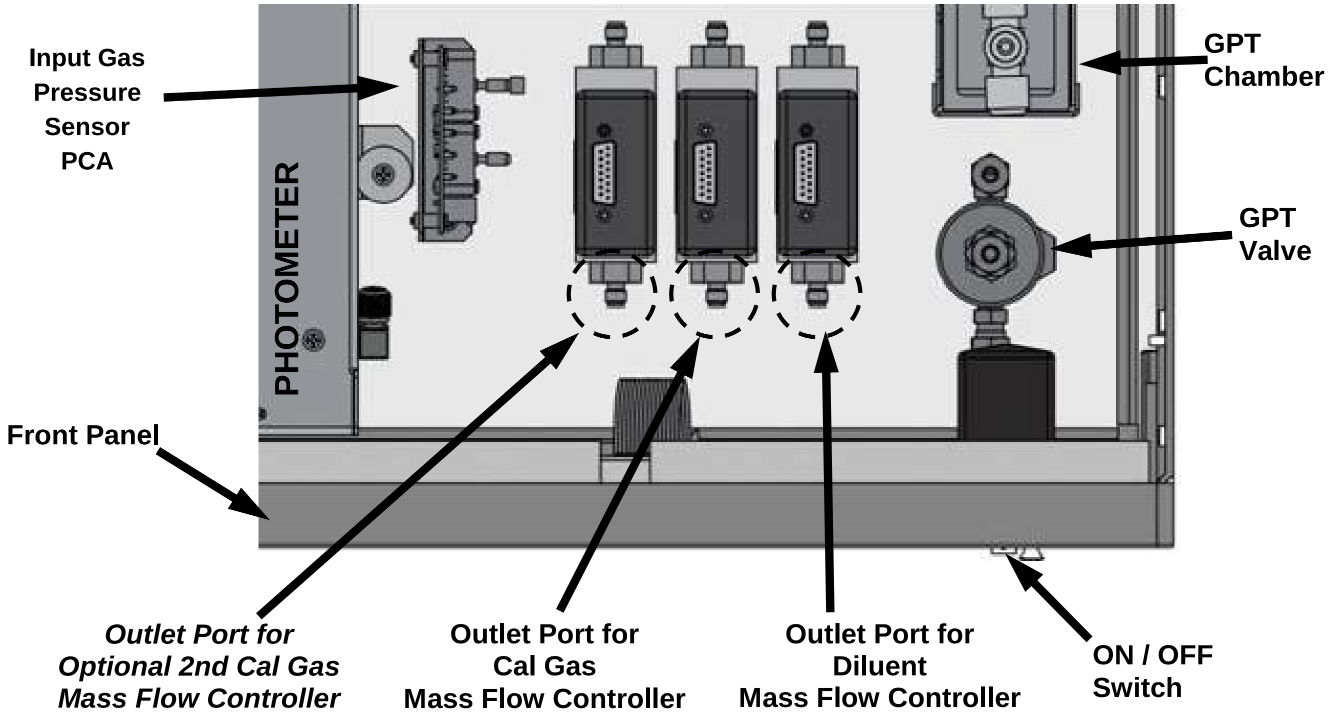
Input Gas Pressure Sensor PCA
PHOTOMETER
GPT Chamber
GPT Valve
Front Panel
Outlet Port for Optional 2nd Cal Gas Mass Flow Controller
Outlet Port for Cal Gas Mass Flow Controller
Outlet Port for Diluent Mass Flow Controller
ON / OFF Switch

Figure 7-1: Location of MFC Outlet Ports

4. Turn the T700 Dynamic Dilution Calibrator ON.

7.2.2. VERIFYING AND CALIBRATING THE T700’S MFC’S

Once the external flow meter is connected to the output of the MFC being verified/calibrated, perform the following steps:

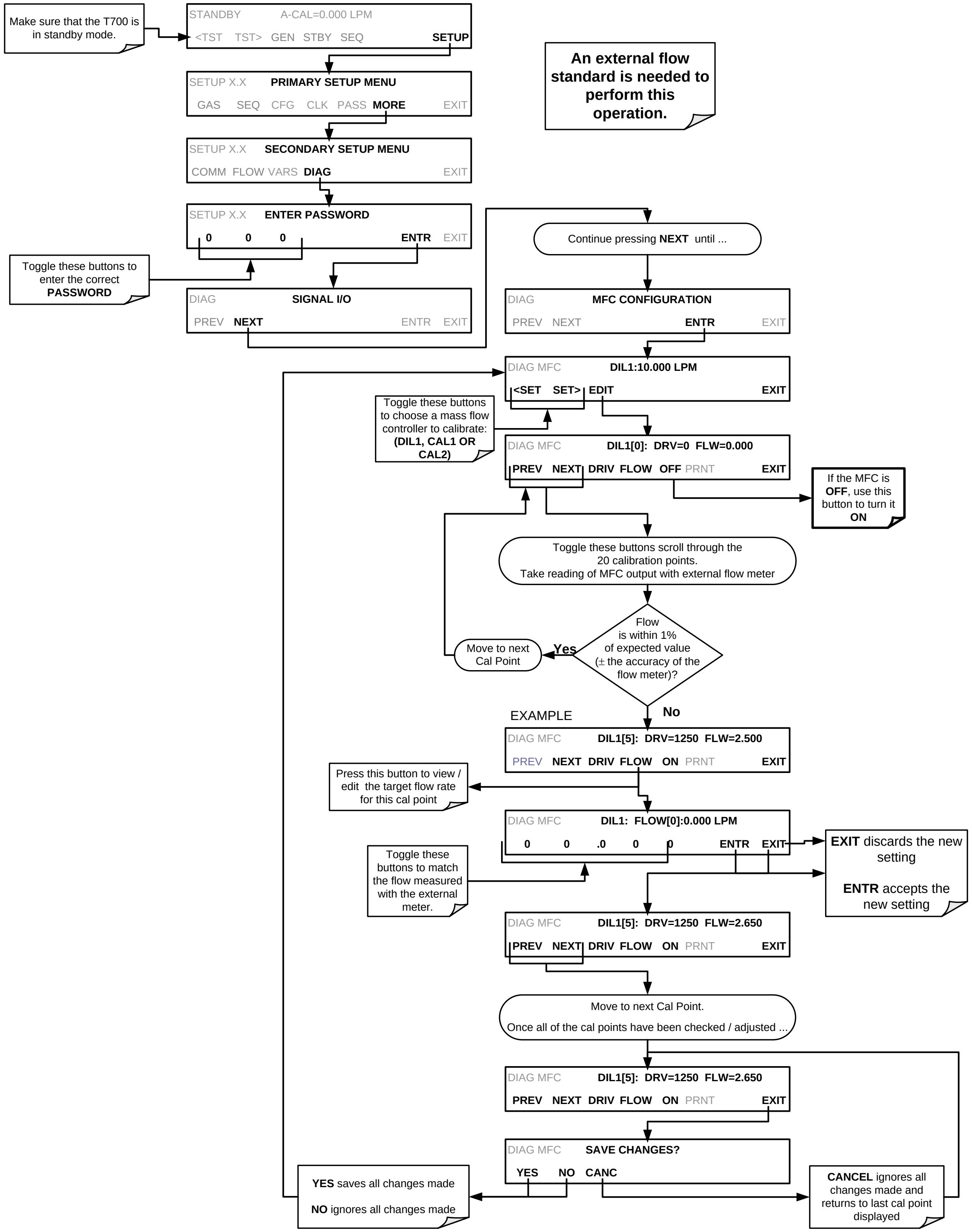
Make sure that the T700 is in standby mode.
STANDBY A-CAL=0.000 LPM
<TST TST> GEN STBY SEQ SETUP
An external flow standard is needed to perform this operation.
SETUP X.X PRIMARY SETUP MENU
GAS SEQ CFG CLK PASS MORE EXIT
SETUP X.X SECONDARY SETUP MENU
COMM FLOW VARS DIAG EXIT
SETUP X.X ENTER PASSWORD
0 0 0 ENTR EXIT
Toggle these buttons to enter the correct PASSWORD
DIAG SIGNAL I/O
PREV NEXT ENTR EXIT
Continue pressing NEXT until ...
DIAG MFC CONFIGURATION
PREV NEXT ENTR EXIT
DIAG MFC DIL1:10.000 LPM
<SET SET> EDIT EXIT
Toggle these buttons to choose a mass flow controller to calibrate: (DIL1, CAL1 OR CAL2)
DIAG MFC DIL1[0]: DRV=0 FLW=0.000
PREV NEXT DRIV FLOW OFF PRNT EXIT
If the MFC is OFF, use this button to turn it ON
Toggle these buttons scroll through the 20 calibration points.
Take reading of MFC output with external flow meter
Flow is within 1% of expected value (± the accuracy of the flow meter)?
Yes
Move to next Cal Point
No
EXAMPLE
DIAG MFC DIL1[5]: DRV=1250 FLW=2.500
PREV NEXT DRIV FLOW ON PRNT EXIT
Press this button to view / edit the target flow rate for this cal point
DIAG MFC DIL1: FLOW[0]:0.000 LPM
0 0 .0 0 0 ENTR EXIT
Toggle these buttons to match the flow measured with the external meter.
EXIT discards the new setting
ENTR accepts the new setting
DIAG MFC DIL1[5]: DRV=1250 FLW=2.650
PREV NEXT DRIV FLOW ON PRNT EXIT
Move to next Cal Point.
Once all of the cal points have been checked / adjusted ...
DIAG MFC DIL1[5]: DRV=1250 FLW=2.650
PREV NEXT DRIV FLOW ON PRNT EXIT
DIAG MFC SAVE CHANGES?
YES NO CANC
YES saves all changes made
NO ignores all changes made
CANCEL ignores all changes made and returns to last cal point displayed

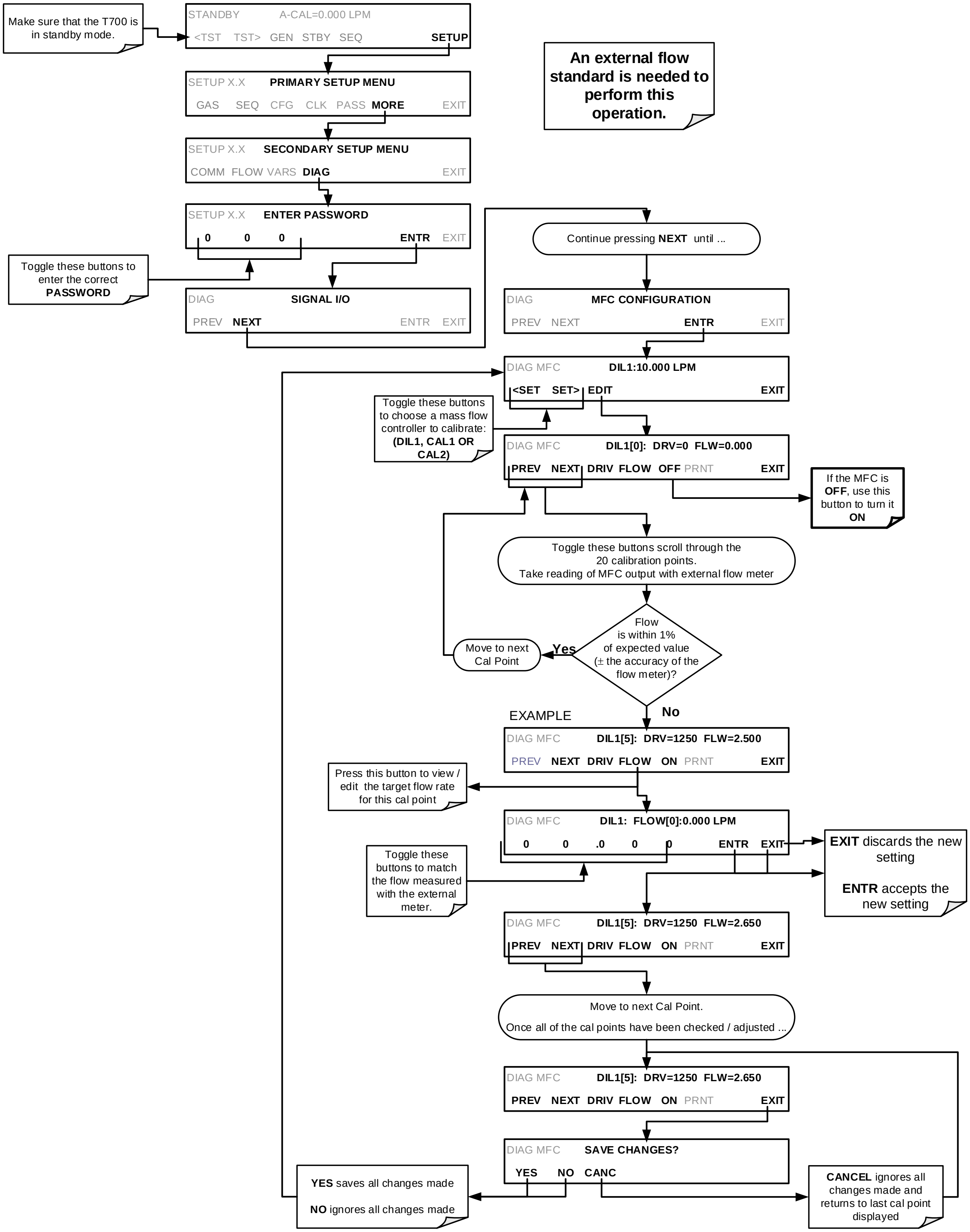
Make sure that the T700 is in standby mode.
STANDBY A-CAL=0.000 LPM
<TST TST> GEN STBY SEQ SETUP
SETUP X.X PRIMARY SETUP MENU
GAS SEQ CFG CLK PASS MORE EXIT
SETUP X.X SECONDARY SETUP MENU
COMM FLOW VARS DIAG EXIT
SETUP X.X ENTER PASSWORD
0 0 0 ENTR EXIT
Toggle these buttons to enter the correct PASSWORD
DIAG SIGNAL I/O
PREV NEXT ENTR EXIT
An external flow standard is needed to perform this operation.
Continue pressing NEXT until ...
DIAG MFC CONFIGURATION
PREV NEXT ENTR EXIT
DIAG MFC DIL1:10.000 LPM
<SET SET> EDIT EXIT
Toggle these buttons to choose a mass flow controller to calibrate: (DIL1, CAL1 OR CAL2)
DIAG MFC DIL1[0]: DRV=0 FLW=0.000
PREV NEXT DRIV FLOW OFF PRNT EXIT
If the MFC is OFF, use this button to turn it ON
Toggle these buttons scroll through the 20 calibration points.
Take reading of MFC output with external flow meter
Flow is within 1% of expected value (± the accuracy of the flow meter)?
Yes
Move to next Cal Point
No
EXAMPLE
DIAG MFC DIL1[5]: DRV=1250 FLW=2.500
PREV NEXT DRIV FLOW ON PRNT EXIT
Press this button to view / edit the target flow rate for this cal point
DIAG MFC DIL1: FLOW[0]:0.000 LPM
0 0 .0 0 0 ENTR EXIT
Toggle these buttons to match the flow measured with the external meter.
EXIT discards the new setting
ENTR accepts the new setting
DIAG MFC DIL1[5]: DRV=1250 FLW=2.650
PREV NEXT DRIV FLOW ON PRNT EXIT
Move to next Cal Point.
Once all of the cal points have been checked / adjusted ...
DIAG MFC DIL1[5]: DRV=1250 FLW=2.650
PREV NEXT DRIV FLOW ON PRNT EXIT
DIAG MFC SAVE CHANGES?
YES NO CANC
YES saves all changes made
NO ignores all changes made
CANCEL ignores all changes made and returns to last cal point displayed

7.3. VERIFYING AND CALIBRATING THE T700’S OPTIONAL O_3 PHOTOMETER

For calibrators equipped with the O_3 photometer, the accuracy of calibration mixtures involving O_3 produced by the T700 depends entirely on the accuracy of the photometer, therefore it is very important that the photometer is operating properly and accurately. Setup for Verifying O_3 Photometer Performance is shown in Section 7.3.1.

7.3.1. SETUP FOR VERIFYING O_3 PHOTOMETER PERFORMANCE

Note **This operation requires an external reference photometer.**

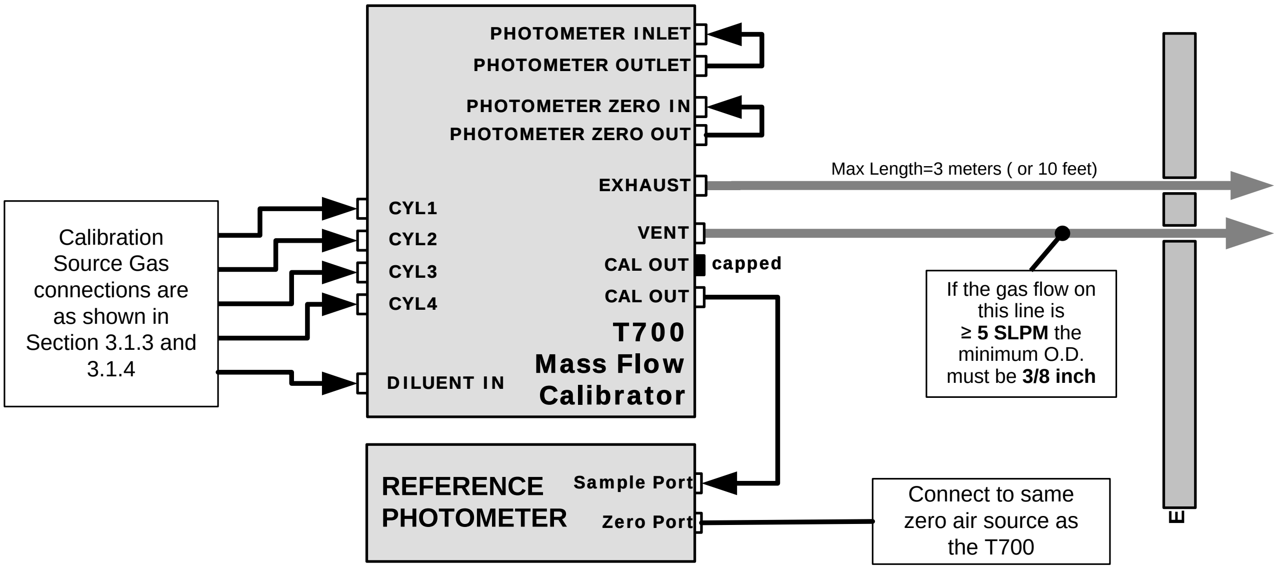
PHOTOMETER INLET
PHOTOMETER OUTLET
PHOTOMETER ZERO IN
PHOTOMETER ZERO OUT
EXHAUST
Max Length=3 meters (or 10 feet)
VENT
CAL OUT
capped
CAL OUT
CYL1
CYL2
CYL3
CYL4
DILUENT IN
T700
Mass Flow
Calibrator
Calibration Source Gas connections are as shown in Section 3.1.3 and 3.1.4
If the gas flow on this line is ≥ 5 SLPM the minimum O.D. must be 3/8 inch
REFERENCE PHOTOMETER
Sample Port
Zero Port
Connect to same zero air source as the T700
E

Figure 7-2: Set up for Verifying Optional O_3 Photometer

7.3.2. VERIFYING O_3 PHOTOMETER PERFORMANCE

To verify the performance of the T700’s optional internal photometer perform the following steps:

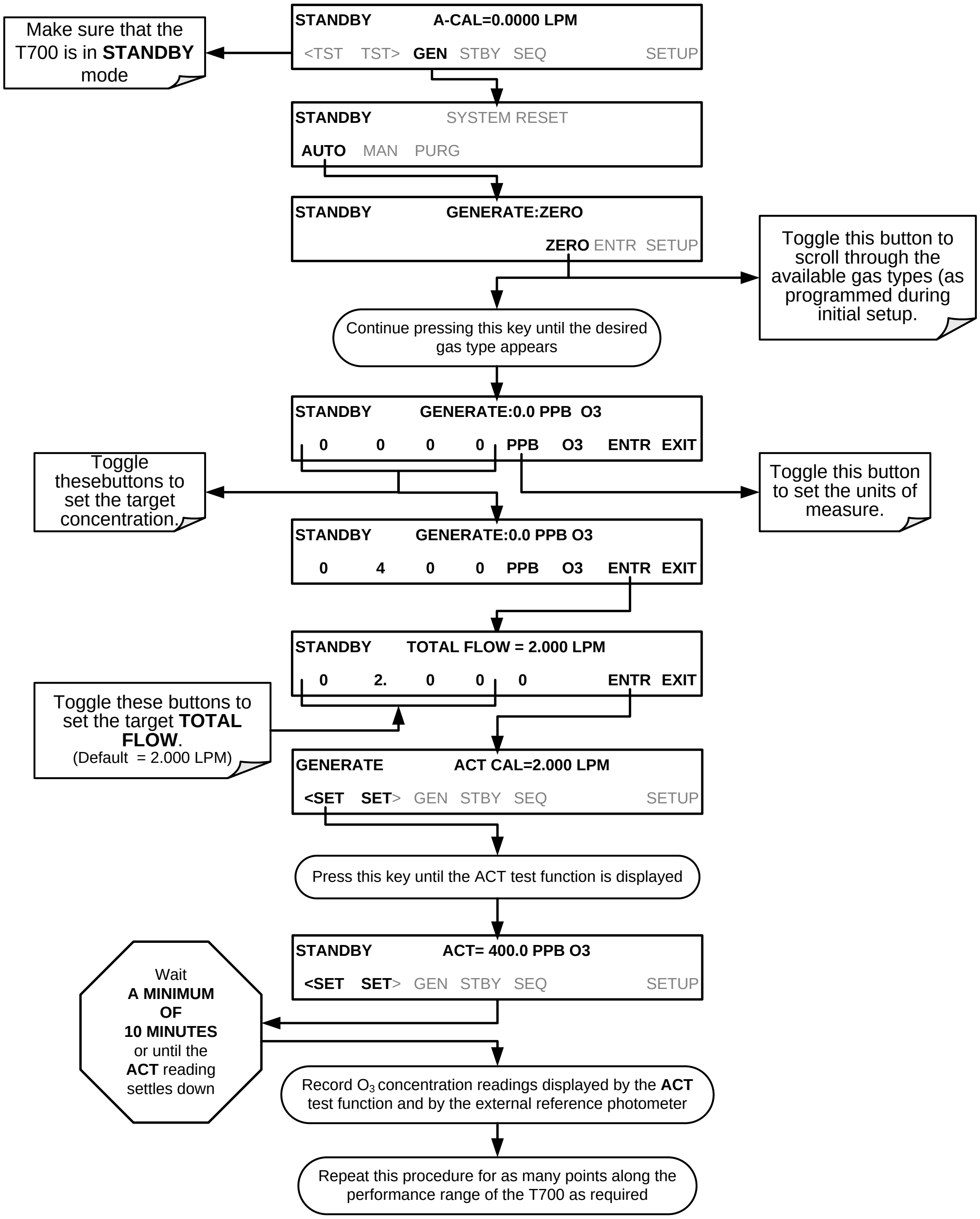
Make sure that the T700 is in **STANDBY** mode
STANDBY A-CAL=0.0000 LPM
<TST TST> GEN STBY SEQ SETUP
STANDBY SYSTEM RESET
AUTO MAN PURG
STANDBY GENERATE:ZERO
ZERO ENTR SETUP
Toggle this button to scroll through the available gas types (as programmed during initial setup.
Continue pressing this key until the desired gas type appears
STANDBY GENERATE:0.0 PPB O3
0 0 0 0 PPB O3 ENTR EXIT
Toggle thesebuttons to set the target concentration.
Toggle this button to set the units of measure.
STANDBY GENERATE:0.0 PPB O3
0 4 0 0 PPB O3 ENTR EXIT
STANDBY TOTAL FLOW = 2.000 LPM
0 2. 0 0 0 ENTR EXIT
Toggle these buttons to set the target **TOTAL FLOW**.
(Default = 2.000 LPM)
GENERATE ACT CAL=2.000 LPM
<SET SET> GEN STBY SEQ SETUP
Press this key until the ACT test function is displayed
STANDBY ACT= 400.0 PPB O3
<SET SET> GEN STBY SEQ SETUP
Wait **A MINIMUM OF 10 MINUTES** or until the **ACT** reading settles down
Record O3 concentration readings displayed by the **ACT** test function and by the external reference photometer
Repeat this procedure for as many points along the performance range of the T700 as required

Note **The readings recorded from the T700’s ACT test function and the reference photometer should be within 1% of each other.**

7.3.3. SETUP FOR CALIBRATION OF THE O_3 PHOTOMETER

Note **This procedure requires external sources for zero air and O_3 as an external reference photometer.**

Calibrating the T700 calibrator's optional internal photometer requires a different set up than that used during the normal operation of the calibrator. There are two ways to make the connections between these instruments and the T700 calibrator: either with direct connections or calibration manifolds

7.3.3.1. Setup Using Direct Connections

Figure 7-3 shows the external zero air and O_3 sources as well as the reference photometer connected directly to the fixtures on the back of the T700 Calibrator.

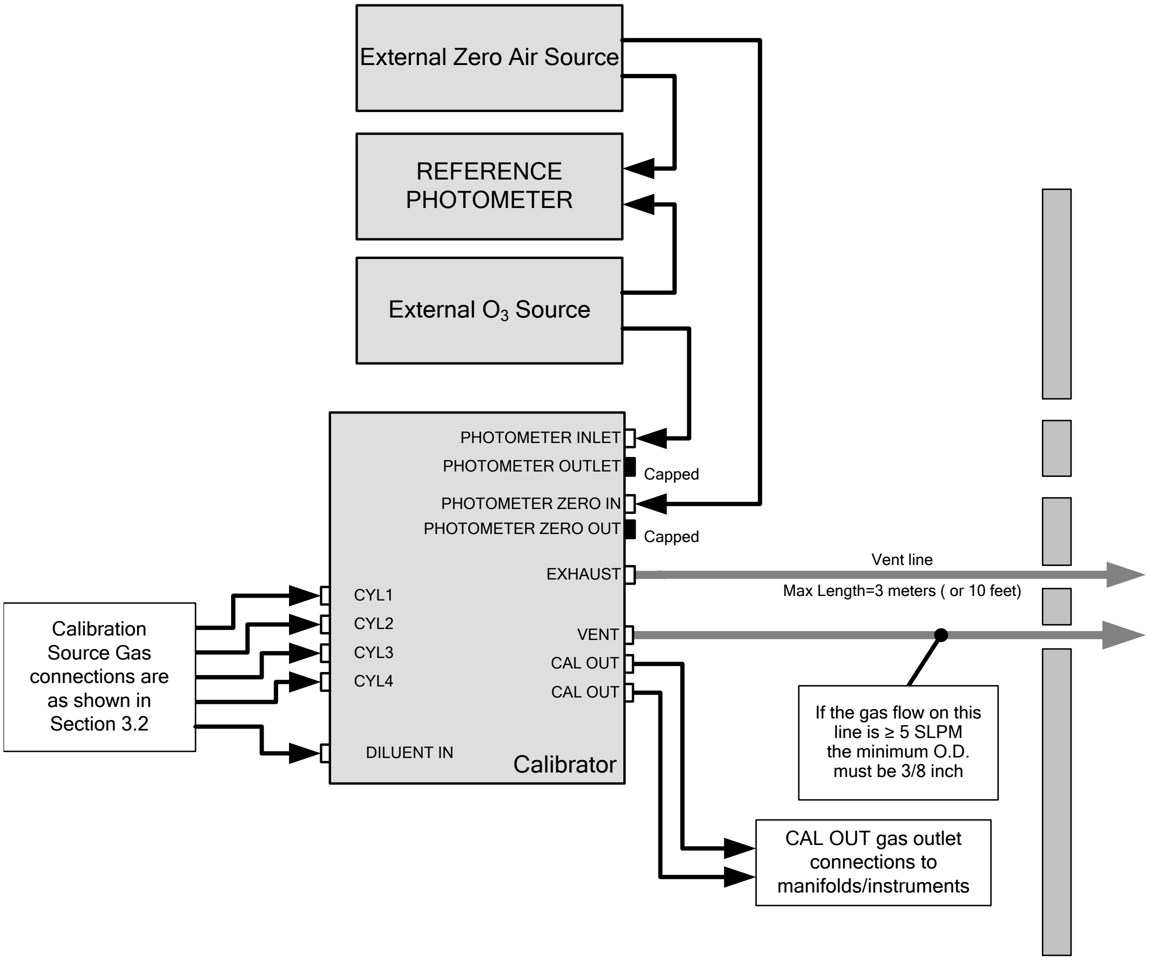
External Zero Air Source
REFERENCE PHOTOMETER
External O3 Source
PHOTOMETER INLET
PHOTOMETER OUTLET
Capped
PHOTOMETER ZERO IN
PHOTOMETER ZERO OUT
Capped
EXHAUST
Vent line
Max Length=3 meters (or 10 feet)
VENT
CAL OUT
CAL OUT
CYL1
CYL2
CYL3
CYL4
DILUENT IN
Calibrator
Calibration Source Gas connections are as shown in Section 3.2
If the gas flow on this line is ≥ 5 SLPM the minimum O.D. must be 3/8 inch
CAL OUT gas outlet connections to manifolds/instruments

Figure 7-3: External Photometer Validation Setup – Direct Connections

Note **A Minimum of 1.1 LPM is required for the external zero air source.**

7.3.3.2. **Setup Using a Calibration Manifold**

Figure 7-4 shows the external zero air and O_3 sources as well as the reference photometer connected to the T700 Calibrator via calibration manifolds for both zero air and O_3.

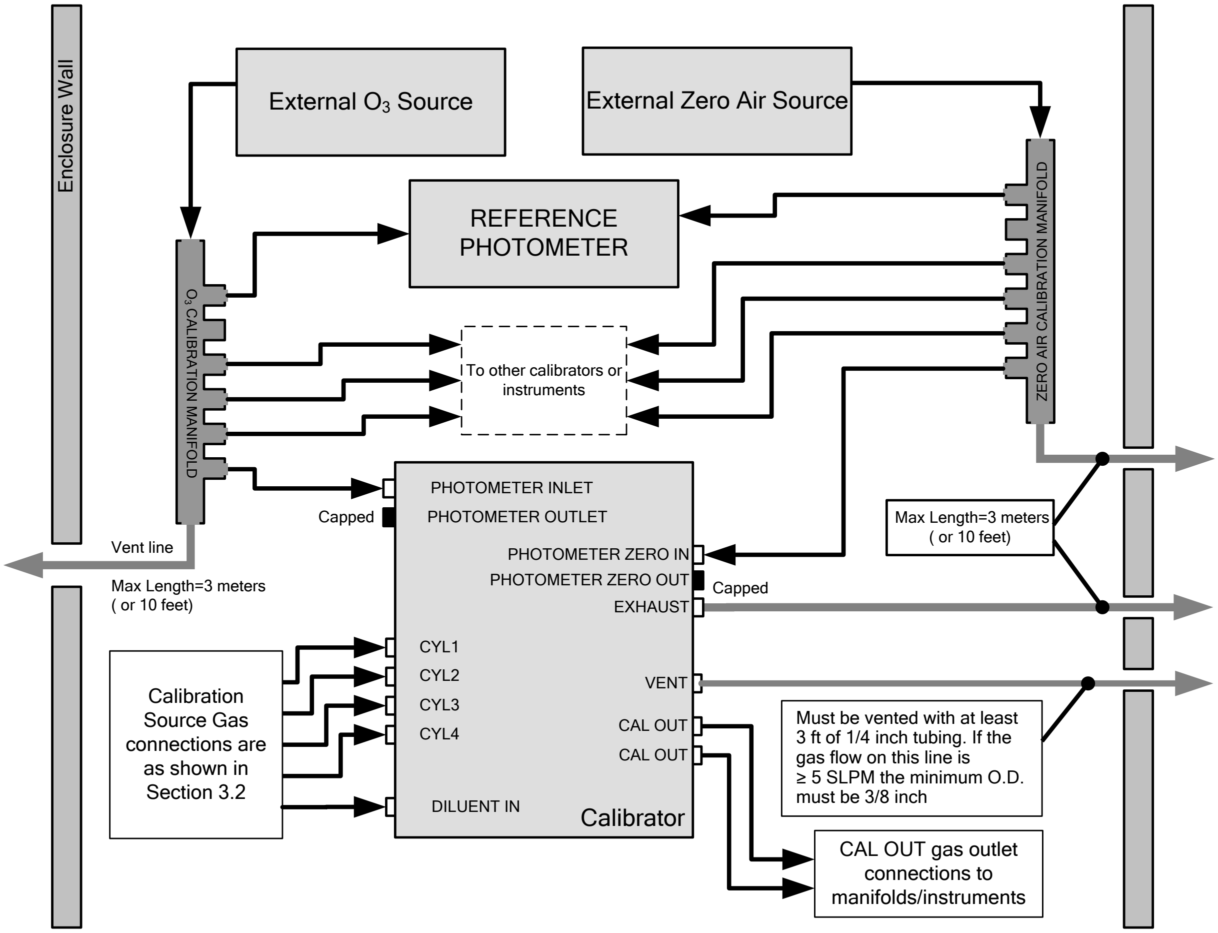
Enclosure Wall
External O_3 Source
External Zero Air Source
REFERENCE PHOTOMETER
O_3 CALIBRATION MANIFOLD
ZERO AIR CALIBRATION MANIFOLD
To other calibrators or instruments
PHOTOMETER INLET
Capped
PHOTOMETER OUTLET
PHOTOMETER ZERO IN
PHOTOMETER ZERO OUT
Capped
EXHAUST
Vent line
Max Length=3 meters (or 10 feet)
Max Length=3 meters (or 10 feet)
CYL1
CYL2
CYL3
CYL4
VENT
CAL OUT
CAL OUT
DILUENT IN
Calibrator
Calibration Source Gas connections are as shown in Section 3.2
Must be vented with at least 3 ft of 1/4 inch tubing. If the gas flow on this line is ≥ 5 SLPM the minimum O.D. must be 3/8 inch
CAL OUT gas outlet connections to manifolds/instruments

Figure 7-4: External Photometer Validation Setup with Calibration Manifolds

Note **The manifolds as shown in the above drawing are oriented to simplify the drawing. The actual orientation in your setup is with the ports facing upward. All unused ports should be capped. A Minimum of 1.1 LPM is required for the external zero air source.**

7.3.3.3. **Calibration Manifold Exhaust/Vent Line**

The manifold's excess gas should be vented to a suitable vent outside of the room. The internal diameter of this vent should be large enough to avoid any appreciable pressure drop, and it must be located sufficiently downstream of the output ports to ensure that no ambient air enters the manifold due to eddy currents or back diffusion.

7.3.4. **PERFORMING AN O_3 PHOTOMETER EXTERNAL CALIBRATION**

The following procedure sets values held in the calibrator's memory for zero point **OFFSET** and **SLOPE.**

7.3.4.1. **Photometer Zero Calibration**

To set the zero point offset for the T700 Dynamic Dilution Calibrator’s photometer, press:

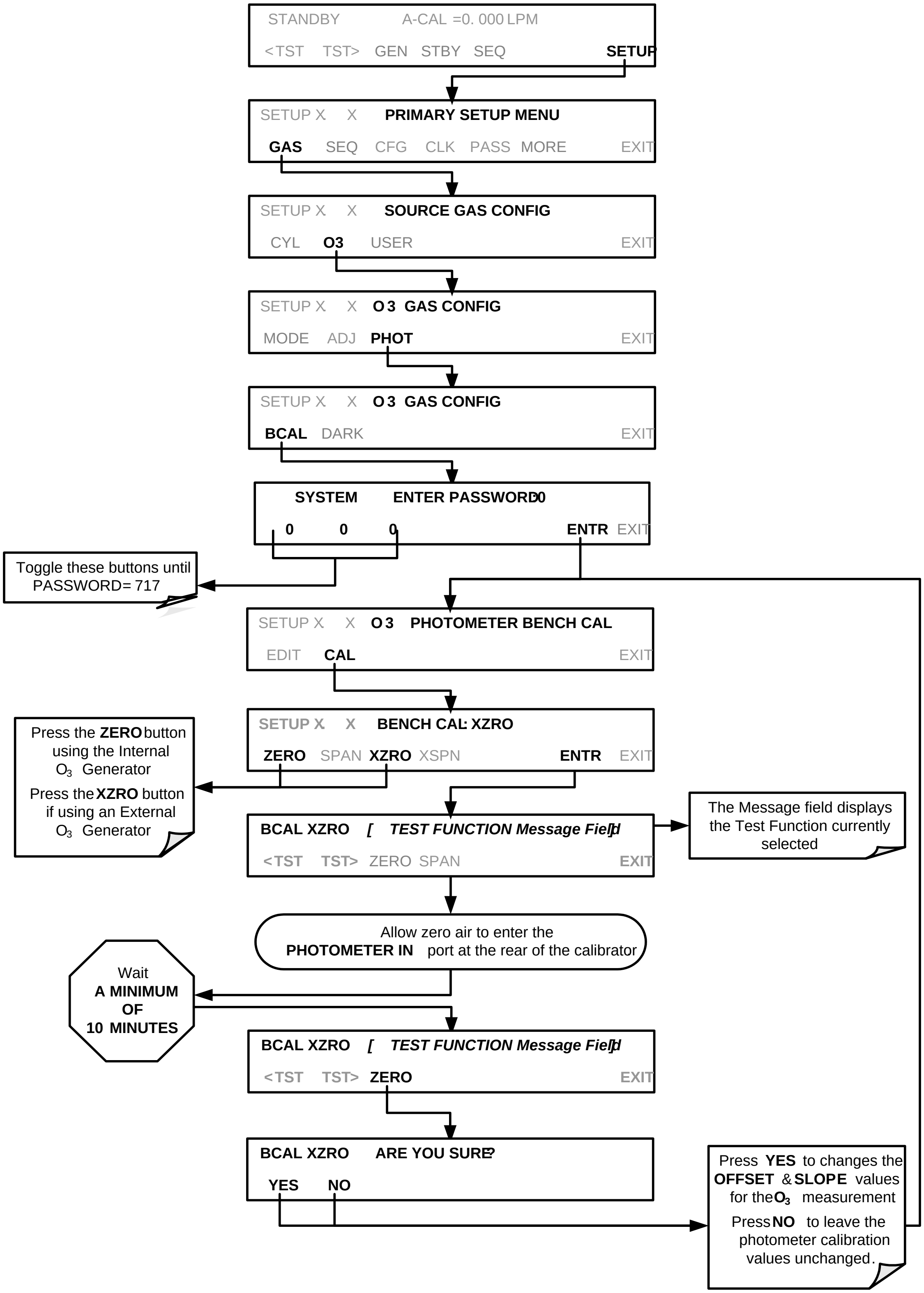
STANDBY A-CAL =0. 000 LPM
<TST TST> GEN STBY SEQ SETUP
SETUP X X PRIMARY SETUP MENU
GAS SEQ CFG CLK PASS MORE EXIT
SETUP X X SOURCE GAS CONFIG
CYL O3 USER EXIT
SETUP X X O3 GAS CONFIG
MODE ADJ PHOT EXIT
SETUP X X O3 GAS CONFIG
BCAL DARK EXIT
SYSTEM ENTER PASSWORD:0
0 0 0 ENTR EXIT
Toggle these buttons until PASSWORD= 717
SETUP X X O3 PHOTOMETER BENCH CAL
EDIT CAL EXIT
SETUP X X BENCH CAL: XZRO
ZERO SPAN XZRO XSPN ENTR EXIT
Press the ZERO button using the Internal O3 Generator
Press the XZRO button if using an External O3 Generator
BCAL XZRO [TEST FUNCTION Message Field]
<TST TST> ZERO SPAN EXIT
The Message field displays the Test Function currently selected
Allow zero air to enter the PHOTOMETER IN port at the rear of the calibrator
Wait A MINIMUM OF 10 MINUTES
BCAL XZRO [TEST FUNCTION Message Field]
<TST TST> ZERO EXIT
BCAL XZRO ARE YOU SURE?
YES NO
Press YES to changes the OFFSET & SLOPE values for the O3 measurement
Press NO to leave the photometer calibration values unchanged.

7.3.4.2. **Photometer Span Calibration**

To set the response SLOPE for the T700 Dynamic Dilution Calibrator's photometer, press:

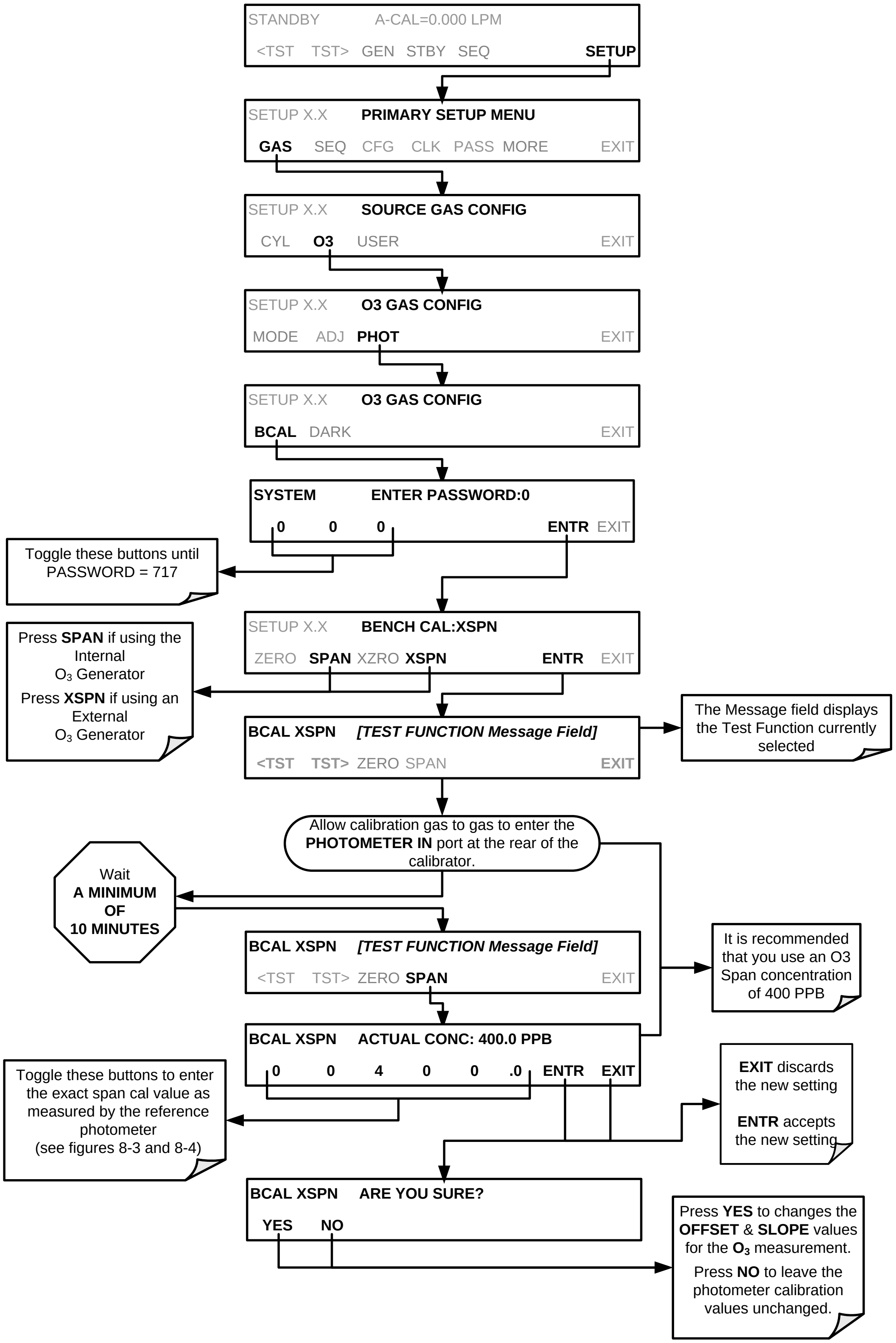
STANDBY A-CAL=0.000 LPM
<TST TST> GEN STBY SEQ SETUP
SETUP X.X PRIMARY SETUP MENU
GAS SEQ CFG CLK PASS MORE EXIT
SETUP X.X SOURCE GAS CONFIG
CYL O3 USER EXIT
SETUP X.X O3 GAS CONFIG
MODE ADJ PHOT EXIT
SETUP X.X O3 GAS CONFIG
BCAL DARK EXIT
SYSTEM ENTER PASSWORD:0
0 0 0 ENTR EXIT
SETUP X.X BENCH CAL:XSPN
ZERO SPAN XZRO XSPN ENTR EXIT
BCAL XSPN [TEST FUNCTION Message Field]
<TST TST> ZERO SPAN EXIT
Wait
A MINIMUM
OF
10 MINUTES
BCAL XSPN [TEST FUNCTION Message Field]
<TST TST> ZERO SPAN EXIT
BCAL XSPN ACTUAL CONC: 400.0 PPB
0 0 4 0 0 .0 ENTR EXIT
BCAL XSPN ARE YOU SURE?
YES NO

Toggle these buttons until PASSWORD = 717

Press **SPAN** if using the Internal O_3 Generator

Press **XSPN** if using an External O_3 Generator

The Message field displays the Test Function currently selected

Allow calibration gas to gas to enter the **PHOTOMETER IN** port at the rear of the calibrator.

It is recommended that you use an O3 Span concentration of 400 PPB

Toggle these buttons to enter the exact span cal value as measured by the reference photometer (see figures 8-3 and 8-4)

EXIT discards the new setting

ENTR accepts the new setting

Press **YES** to changes the **OFFSET** & **SLOPE** values for the **O_3** measurement.

Press **NO** to leave the photometer calibration values unchanged.

7.3.5. O_3 PHOTOMETER DARK CALIBRATION

The Dark Calibration Test turns off the Photometer UV Lamp and records any offset signal level of the UV Detector-Preamp-Voltage to Frequency Converter circuitry. This allows the instrument to compensate for any voltage levels inherent in the Photometer detection circuit that might affect the output of the detector circuitry and therefore the calculation of O_3 concentration.

To activate the Dark Calibration feature:

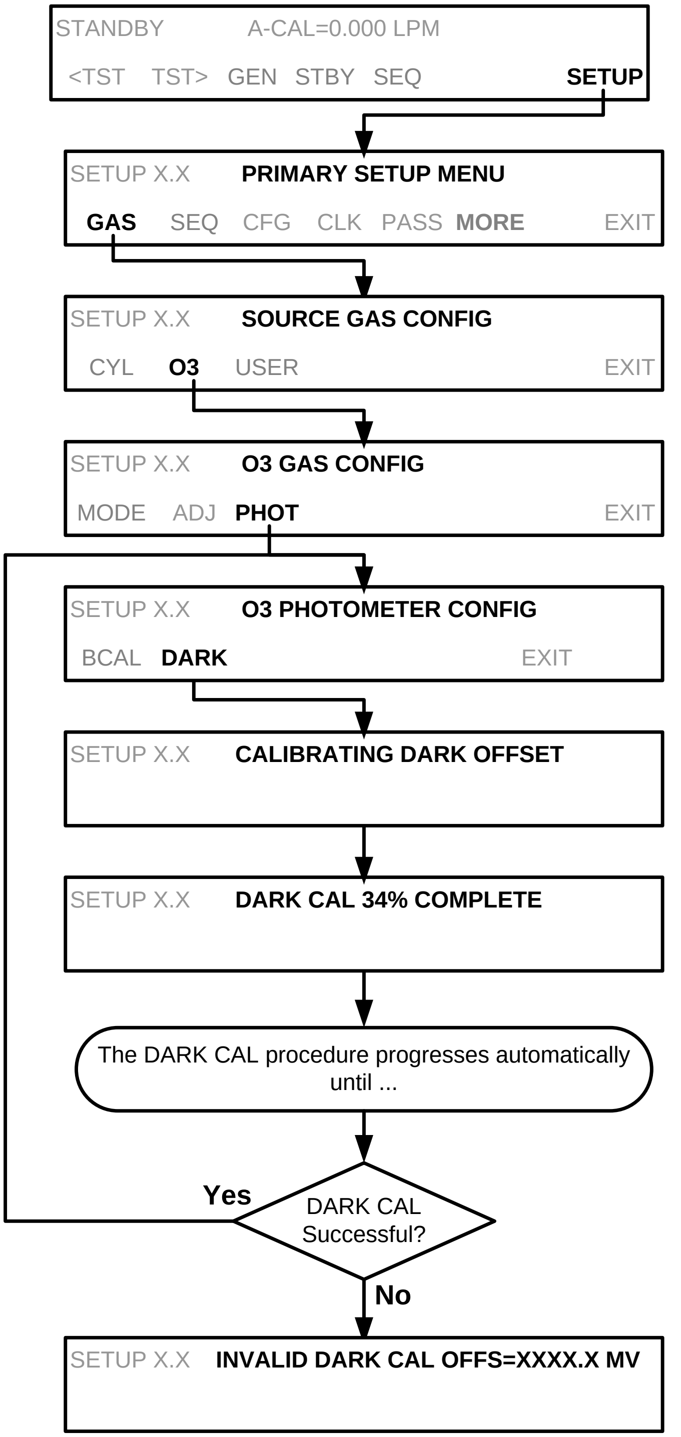
STANDBY A-CAL=0.000 LPM
<TST TST> GEN STBY SEQ SETUP
SETUP X.X PRIMARY SETUP MENU
GAS SEQ CFG CLK PASS MORE EXIT
SETUP X.X SOURCE GAS CONFIG
CYL O3 USER EXIT
SETUP X.X O3 GAS CONFIG
MODE ADJ PHOT EXIT
SETUP X.X O3 PHOTOMETER CONFIG
BCAL DARK EXIT
SETUP X.X CALIBRATING DARK OFFSET
SETUP X.X DARK CAL 34% COMPLETE
The DARK CAL procedure progresses automatically until ...
DARK CAL Successful?
Yes
No
SETUP X.X INVALID DARK CAL OFFS=XXXX.X MV

7.3.6. **O_3 PHOTOMETER GAS FLOW CALIBRATION**

Note **A separate flow meter is required for the procedure.**

To calibrate the flow of gas through the T700 calibrator's optional photometer bench.

1. Turn OFF the T700 Dynamic Dilution Calibrator.
2. Attach the flow meter directly to the EXHAUST port of the T700 calibrator.
3. Turn the T700 Dynamic Dilution Calibrator ON.
4. Perform the following steps:

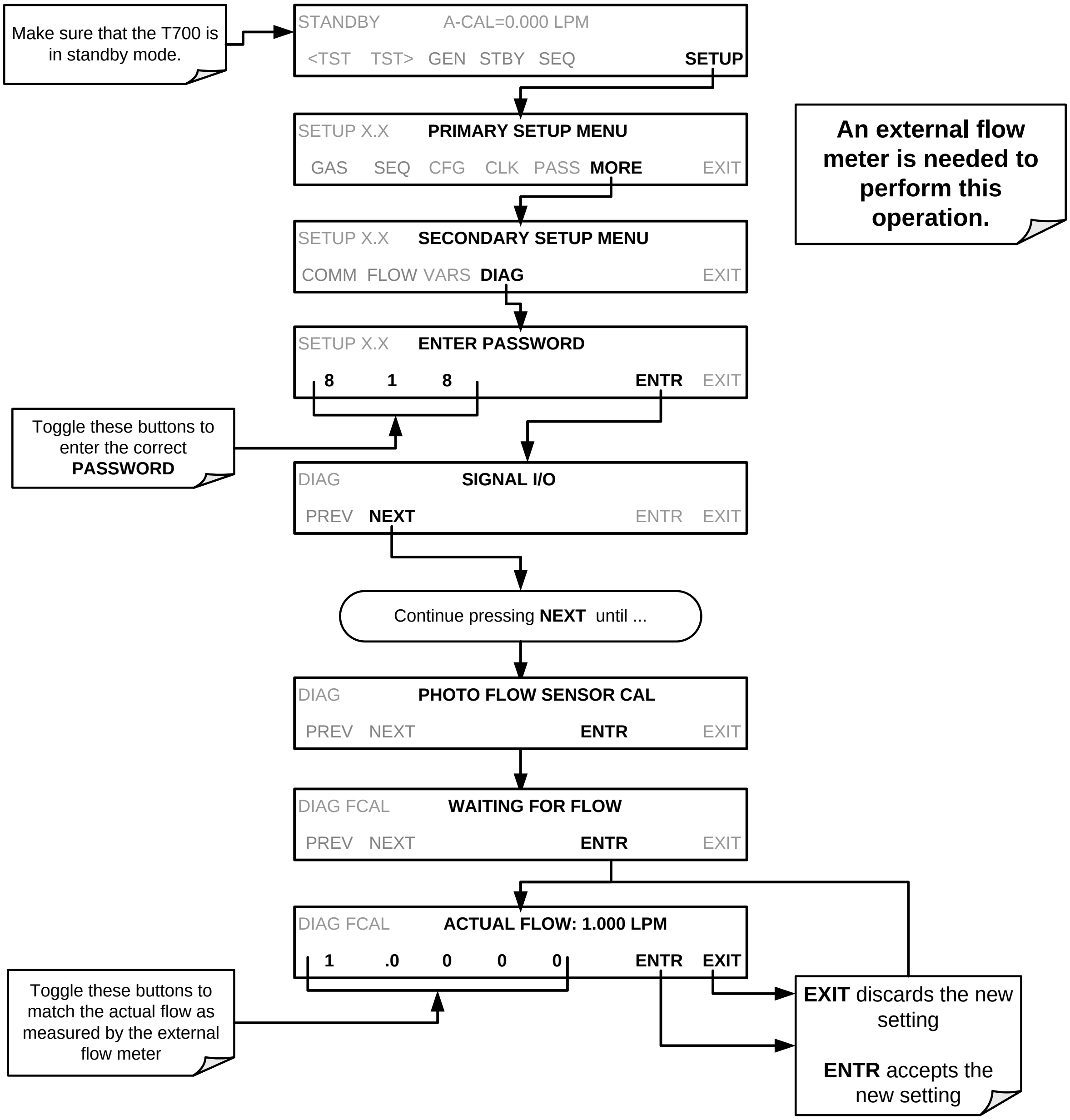
STANDBY A-CAL=0.000 LPM
<TST TST> GEN STBY SEQ SETUP
SETUP X.X PRIMARY SETUP MENU
GAS SEQ CFG CLK PASS MORE EXIT
SETUP X.X SECONDARY SETUP MENU
COMM FLOW VARS DIAG EXIT
SETUP X.X ENTER PASSWORD
8 1 8 ENTR EXIT
DIAG SIGNAL I/O
PREV NEXT ENTR EXIT
Continue pressing NEXT until ...
DIAG PHOTO FLOW SENSOR CAL
PREV NEXT ENTR EXIT
DIAG FCAL WAITING FOR FLOW
PREV NEXT ENTR EXIT
DIAG FCAL ACTUAL FLOW: 1.000 LPM
1 .0 0 0 0 ENTR EXIT

Make sure that the T700 is in standby mode.

An external flow meter is needed to perform this operation.

Toggle these buttons to enter the correct **PASSWORD**

Toggle these buttons to match the actual flow as measured by the external flow meter

EXIT discards the new setting

ENTR accepts the new setting

7.3.7. O_3 PHOTOMETER BACKPRESSURE COMPENSATION CALIBRATION

Any time there is a pneumatic configuration change, there is risk of impacting the internal measure/reference pressure. To compensate for this, a backpressure compensation calibration is required each time. Set the calibrator to generate ozone at the flow rate intended for operation. While the instrument is generating ozone, go to the SETUP>MORE>DIAG>818>…>BACKPRESSURE COMPENSATION menu and press ENTR, shown in the following illustration, to initiate the calibration; the operation will take a few minutes:

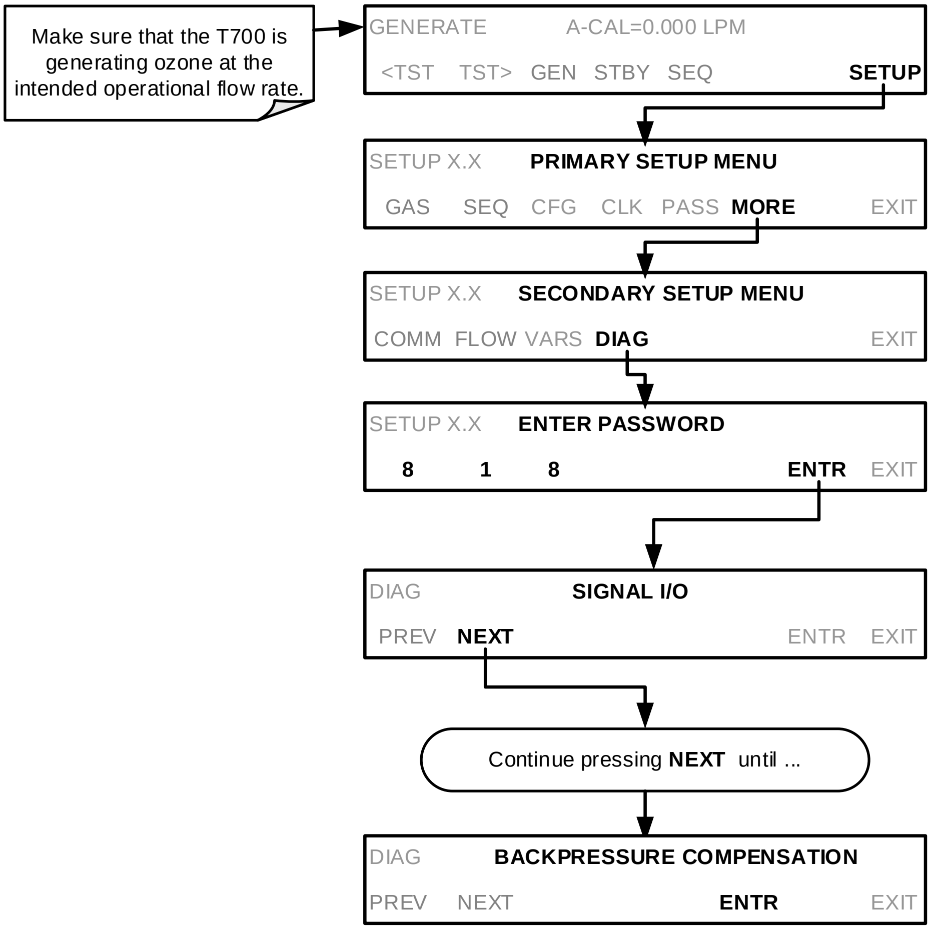

Make sure that the T700 is generating ozone at the intended operational flow rate.

Continue pressing **NEXT** until ...

GENERATE A-CAL=0.000 LPM
<TST TST> GEN STBY SEQ SETUP
SETUP X.X PRIMARY SETUP MENU
GAS SEQ CFG CLK PASS MORE EXIT
SETUP X.X SECONDARY SETUP MENU
COMM FLOW VARS DIAG EXIT
SETUP X.X ENTER PASSWORD
8 1 8 ENTR EXIT
DIAG SIGNAL I/O
PREV NEXT ENTR EXIT
DIAG BACKPRESSURE COMPENSATION
PREV NEXT ENTR EXIT

7.4. CALIBRATING THE O_3 GENERATOR

7.4.1. SETUP FOR VERIFICATION AND CALIBRATION THE O_3 GENERATOR

Note **An external reference photometer is required for the procedure.**

7.4.1.1. Setup Using Direct Connections

Figure 7-5 shows the reference photometer connected directly to the fixtures on the back of the T700 Calibrator.

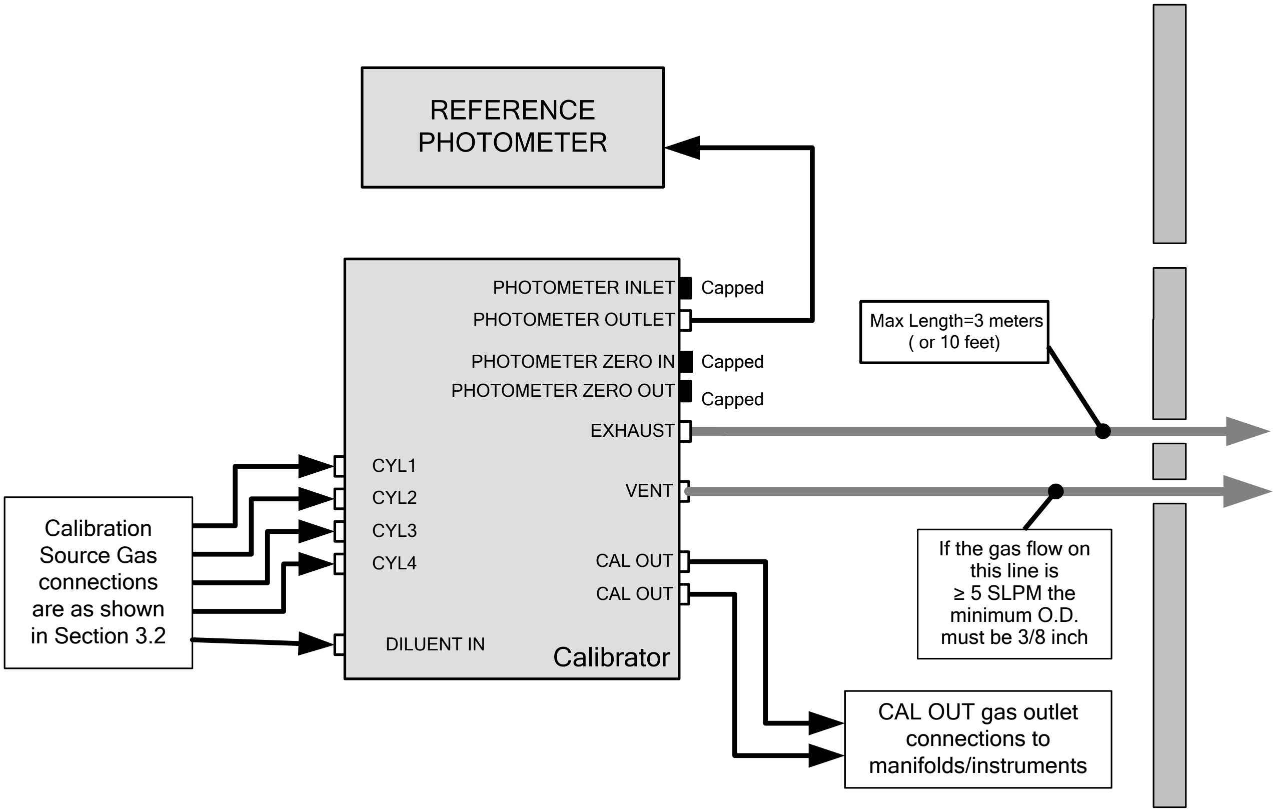
REFERENCE PHOTOMETER
PHOTOMETER INLET
Capped
PHOTOMETER OUTLET
PHOTOMETER ZERO IN
Capped
PHOTOMETER ZERO OUT
Capped
EXHAUST
Max Length=3 meters (or 10 feet)
CYL1
CYL2
CYL3
CYL4
VENT
Calibration Source Gas connections are as shown in Section 3.2
CAL OUT
CAL OUT
If the gas flow on this line is ≥ 5 SLPM the minimum O.D. must be 3/8 inch
DILUENT IN
Calibrator
CAL OUT gas outlet connections to manifolds/instruments

Figure 7-5: O_3 Generator Calibration Setup – Direct Connections

Verifying O_3 Generator Performance

Using the set up shown in Figure 8-4, perform the following steps:

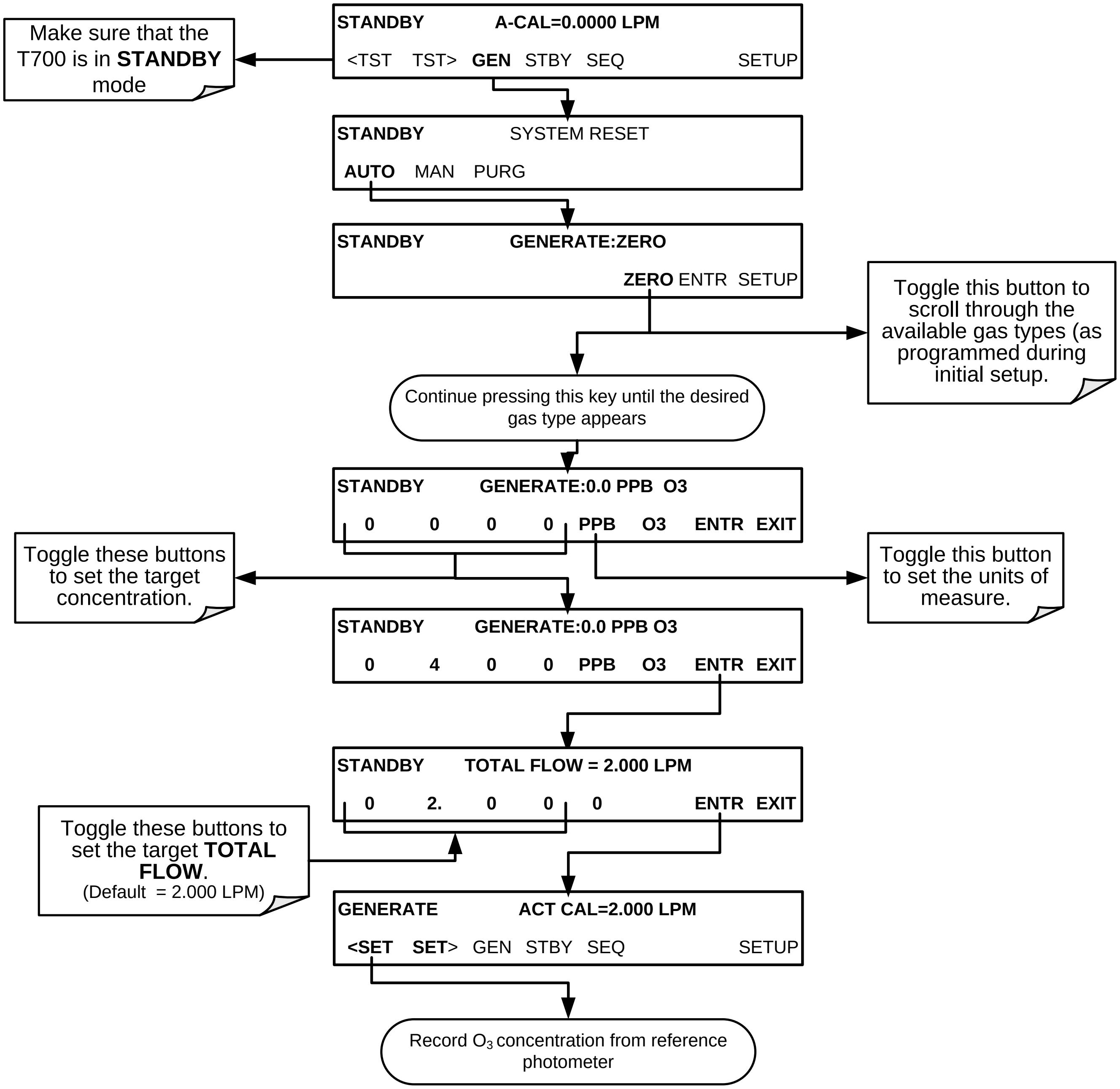
STANDBY A-CAL=0.0000 LPM
<TST TST> GEN STBY SEQ SETUP
Make sure that the T700 is in STANDBY mode
STANDBY SYSTEM RESET
AUTO MAN PURG
STANDBY GENERATE:ZERO
ZERO ENTR SETUP
Toggle this button to scroll through the available gas types (as programmed during initial setup.
Continue pressing this key until the desired gas type appears
STANDBY GENERATE:0.0 PPB O3
0 0 0 0 PPB O3 ENTR EXIT
Toggle these buttons to set the target concentration.
Toggle this button to set the units of measure.
STANDBY GENERATE:0.0 PPB O3
0 4 0 0 PPB O3 ENTR EXIT
STANDBY TOTAL FLOW = 2.000 LPM
0 2. 0 0 0 ENTR EXIT
Toggle these buttons to set the target TOTAL FLOW.
(Default = 2.000 LPM)
GENERATE ACT CAL=2.000 LPM
<SET SET> GEN STBY SEQ SETUP
Record O3 concentration from reference photometer

Note **The readings recorded from the T700's A-CAL test function and the reference photometer should be within 1% of each other.**

7.4.2. O_3 GENERATOR CALIBRATION PROCEDURE

The T700 calibrator's software includes a routine for automatically calibrating the O_3 generator. A table of drive voltages stored in the T700's memory is the basis for this calibration. For each point included in the table used by the T700 to calibrate the optional O_3 generator the user can set a drive voltage and a dwell time for that point. Each point can also be individually turned OFF or ON.

7.4.2.1. Viewing O_3 Generator Calibration Points

To view these calibration points, press:

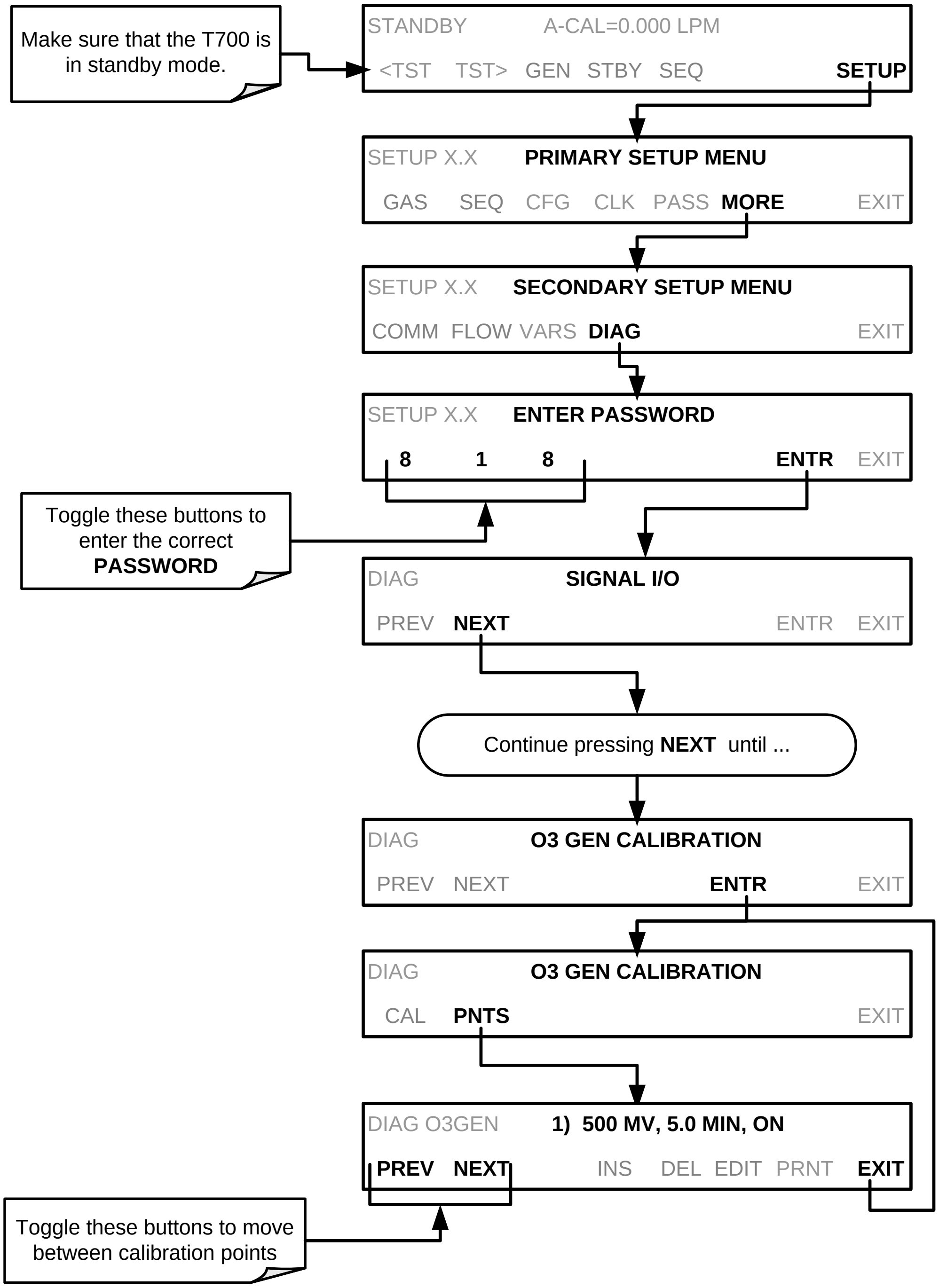

STANDBY A-CAL=0.000 LPM
<TST TST> GEN STBY SEQ SETUP
SETUP X.X PRIMARY SETUP MENU
GAS SEQ CFG CLK PASS MORE EXIT
SETUP X.X SECONDARY SETUP MENU
COMM FLOW VARS DIAG EXIT
SETUP X.X ENTER PASSWORD
8 1 8 ENTR EXIT
DIAG SIGNAL I/O
PREV NEXT ENTR EXIT
DIAG O3 GEN CALIBRATION
PREV NEXT ENTR EXIT
DIAG O3 GEN CALIBRATION
CAL PNTS EXIT
DIAG O3GEN 1) 500 MV, 5.0 MIN, ON
PREV NEXT INS DEL EDIT PRNT EXIT

Make sure that the T700 is in standby mode.

Toggle these buttons to enter the correct **PASSWORD**

Continue pressing **NEXT** until ...

Toggle these buttons to move between calibration points

7.4.2.2. **Adding or Editing O_3 Generator Calibration Points**

To add a calibration point to the table or edit an existing point, press:

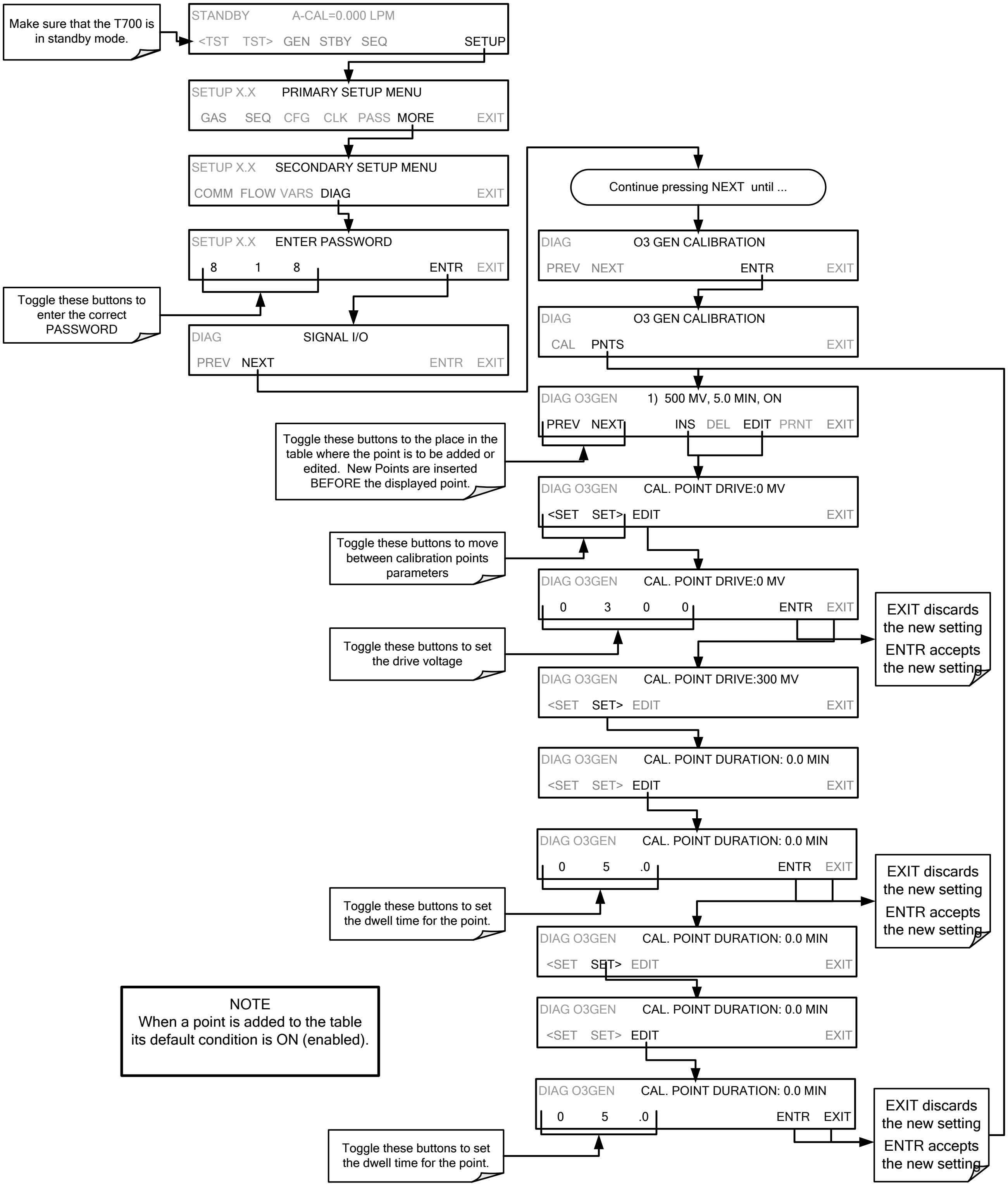
STANDBY A-CAL=0.000 LPM
<TST TST> GEN STBY SEQ SETUP
SETUP X.X PRIMARY SETUP MENU
GAS SEQ CFG CLK PASS MORE EXIT
SETUP X.X SECONDARY SETUP MENU
COMM FLOW VARS DIAG EXIT
SETUP X.X ENTER PASSWORD
8 1 8 ENTR EXIT
DIAG SIGNAL I/O
PREV NEXT ENTR EXIT
Continue pressing NEXT until ...
DIAG O3 GEN CALIBRATION
PREV NEXT ENTR EXIT
DIAG O3 GEN CALIBRATION
CAL PNTS EXIT
DIAG O3GEN 1) 500 MV, 5.0 MIN, ON
PREV NEXT INS DEL EDIT PRNT EXIT
DIAG O3GEN CAL. POINT DRIVE:0 MV
<SET SET> EDIT EXIT
DIAG O3GEN CAL. POINT DRIVE:0 MV
0 3 0 0 ENTR EXIT
DIAG O3GEN CAL. POINT DRIVE:300 MV
<SET SET> EDIT EXIT
DIAG O3GEN CAL. POINT DURATION: 0.0 MIN
<SET SET> EDIT EXIT
DIAG O3GEN CAL. POINT DURATION: 0.0 MIN
0 5 .0 ENTR EXIT
DIAG O3GEN CAL. POINT DURATION: 0.0 MIN
<SET SET> EDIT EXIT
DIAG O3GEN CAL. POINT DURATION: 0.0 MIN
<SET SET> EDIT EXIT
DIAG O3GEN CAL. POINT DURATION: 0.0 MIN
0 5 .0 ENTR EXIT

Make sure that the T700 is in standby mode.

Toggle these buttons to enter the correct PASSWORD

Toggle these buttons to the place in the table where the point is to be added or edited. New Points are inserted BEFORE the displayed point.

Toggle these buttons to move between calibration points parameters

Toggle these buttons to set the drive voltage

EXIT discards the new setting
ENTR accepts the new setting

Toggle these buttons to set the dwell time for the point.

EXIT discards the new setting
ENTR accepts the new setting

NOTE
When a point is added to the table its default condition is ON (enabled).

Toggle these buttons to set the dwell time for the point.

EXIT discards the new setting
ENTR accepts the new setting

7.4.2.3. **Deleting O_3 Generator Calibration Points**

To delete an existing calibration point, press:

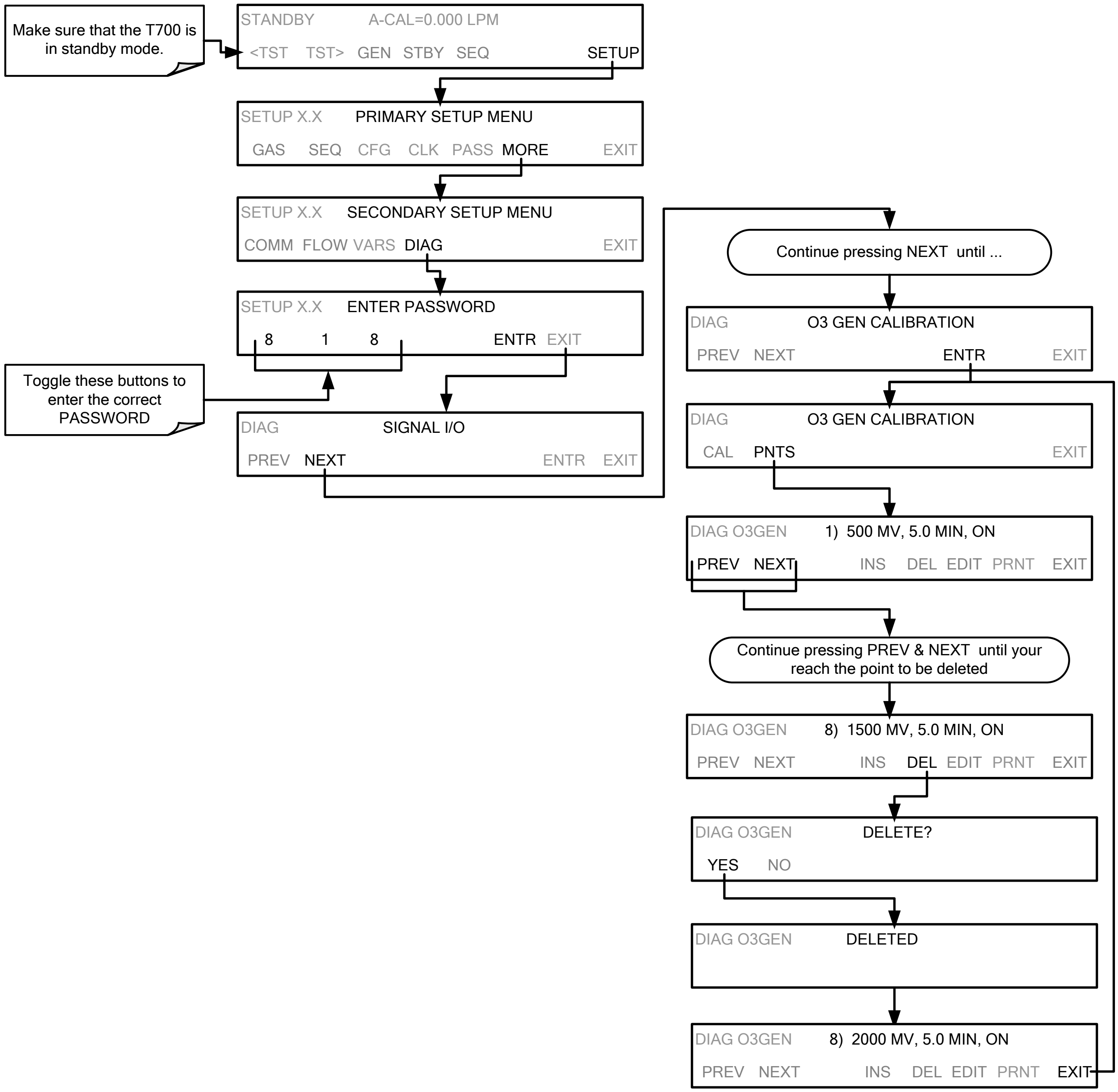
Make sure that the T700 is in standby mode.
STANDBY A-CAL=0.000 LPM
<TST TST> GEN STBY SEQ SETUP
SETUP X.X PRIMARY SETUP MENU
GAS SEQ CFG CLK PASS MORE EXIT
SETUP X.X SECONDARY SETUP MENU
COMM FLOW VARS DIAG EXIT
SETUP X.X ENTER PASSWORD
8 1 8 ENTR EXIT
Toggle these buttons to enter the correct PASSWORD
DIAG SIGNAL I/O
PREV NEXT ENTR EXIT
Continue pressing NEXT until ...
DIAG O3 GEN CALIBRATION
PREV NEXT ENTR EXIT
DIAG O3 GEN CALIBRATION
CAL PNTS EXIT
DIAG O3GEN 1) 500 MV, 5.0 MIN, ON
PREV NEXT INS DEL EDIT PRNT EXIT
Continue pressing PREV & NEXT until your reach the point to be deleted
DIAG O3GEN 8) 1500 MV, 5.0 MIN, ON
PREV NEXT INS DEL EDIT PRNT EXIT
DIAG O3GEN DELETE?
YES NO
DIAG O3GEN DELETED
DIAG O3GEN 8) 2000 MV, 5.0 MIN, ON
PREV NEXT INS DEL EDIT PRNT EXIT

7.4.2.4. **Turning O_3 Generator Calibration Points ON / OFF**

To enable or disable an existing calibration point, press:

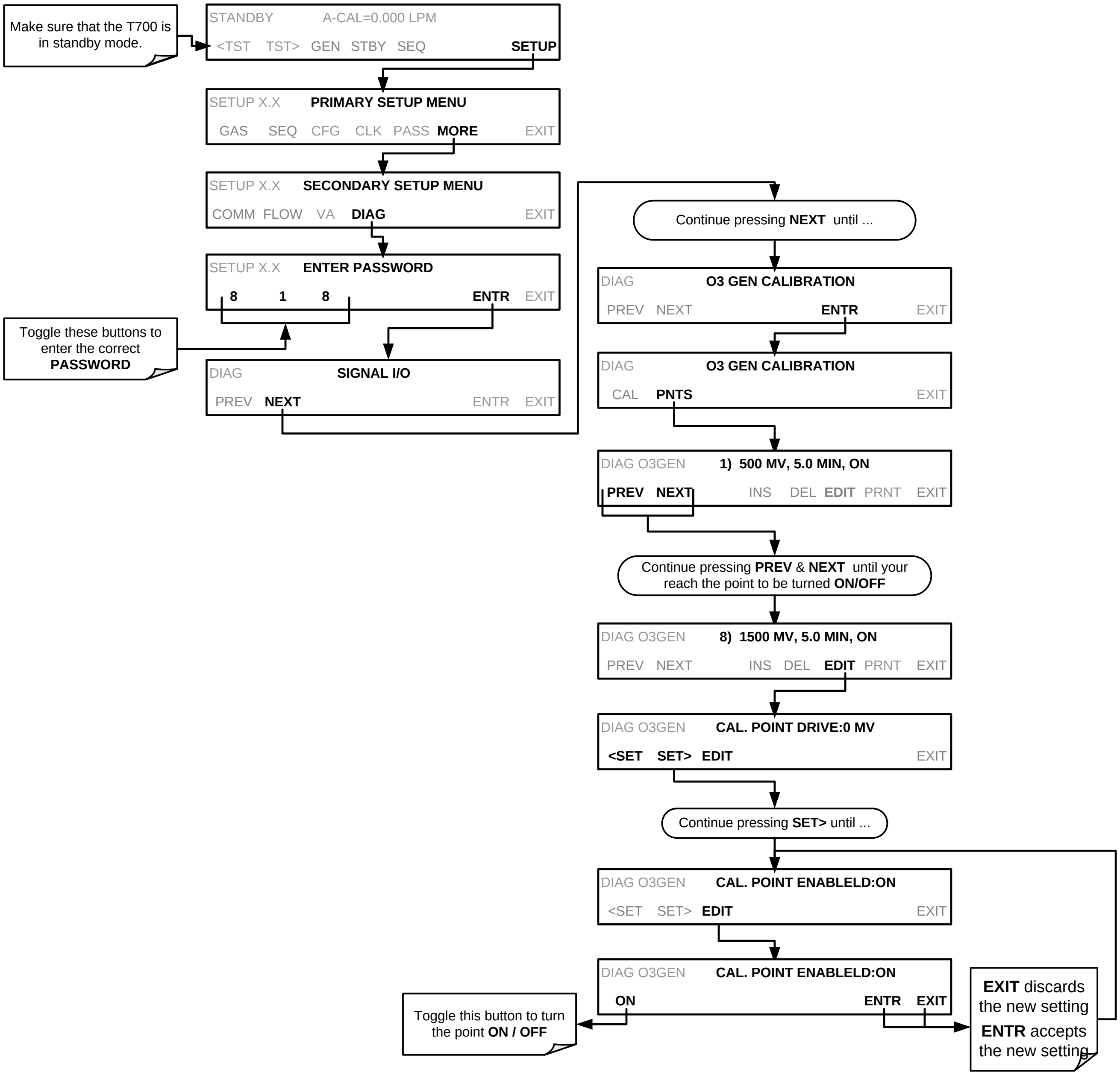
Make sure that the T700 is in standby mode.
STANDBY A-CAL=0.000 LPM
<TST TST> GEN STBY SEQ SETUP
SETUP X.X PRIMARY SETUP MENU
GAS SEQ CFG CLK PASS MORE EXIT
SETUP X.X SECONDARY SETUP MENU
COMM FLOW VA DIAG EXIT
SETUP X.X ENTER PASSWORD
8 1 8 ENTR EXIT
Toggle these buttons to enter the correct PASSWORD
DIAG SIGNAL I/O
PREV NEXT ENTR EXIT
Continue pressing NEXT until ...
DIAG O3 GEN CALIBRATION
PREV NEXT ENTR EXIT
DIAG O3 GEN CALIBRATION
CAL PNTS EXIT
DIAG O3GEN 1) 500 MV, 5.0 MIN, ON
PREV NEXT INS DEL EDIT PRNT EXIT
Continue pressing PREV & NEXT until your reach the point to be turned ON/OFF
DIAG O3GEN 8) 1500 MV, 5.0 MIN, ON
PREV NEXT INS DEL EDIT PRNT EXIT
DIAG O3GEN CAL. POINT DRIVE:0 MV
<SET SET> EDIT EXIT
Continue pressing SET> until ...
DIAG O3GEN CAL. POINT ENABLELD:ON
<SET SET> EDIT EXIT
DIAG O3GEN CAL. POINT ENABLELD:ON
ON ENTR EXIT
Toggle this button to turn the point ON / OFF
EXIT discards the new setting
ENTR accepts the new setting

7.4.2.5. **Performing an Automatic Calibration of the Optional O_3 Generator**

Note **This procedure requires that the T700 calibrator have an optional photometer installed.**

To run the automatic O_3 generator calibration program, press:

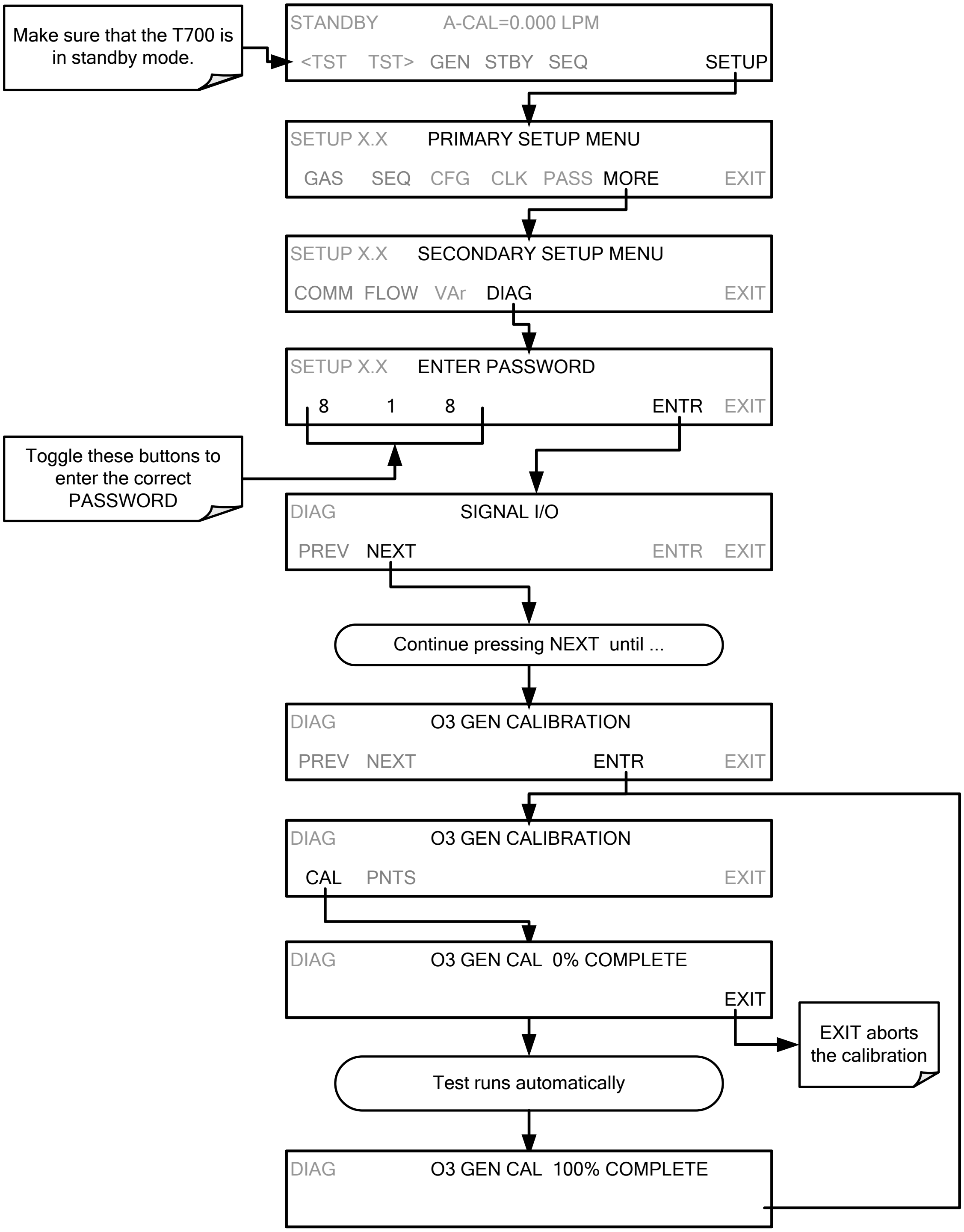
Make sure that the T700 is in standby mode.
STANDBY A-CAL=0.000 LPM
<TST TST> GEN STBY SEQ SETUP
SETUP X.X PRIMARY SETUP MENU
GAS SEQ CFG CLK PASS MORE EXIT
SETUP X.X SECONDARY SETUP MENU
COMM FLOW VAr DIAG EXIT
SETUP X.X ENTER PASSWORD
8 1 8 ENTR EXIT
Toggle these buttons to enter the correct PASSWORD
DIAG SIGNAL I/O
PREV NEXT ENTR EXIT
Continue pressing NEXT until ...
DIAG O3 GEN CALIBRATION
PREV NEXT ENTR EXIT
DIAG O3 GEN CALIBRATION
CAL PNTS EXIT
DIAG O3 GEN CAL 0% COMPLETE
EXIT
EXIT aborts the calibration
Test runs automatically
DIAG O3 GEN CAL 100% COMPLETE

7.5. T700 GAS PRESSURE SENSOR CALIBRATION

Note **The procedures described in this section require a separate pressure meter/monitor.**

The T700 Dynamic Dilution Calibrator has several sensors that monitor the pressure of the gases flowing through the instrument. The data collected by these sensors is used to compensate the final concentration calculations for changes in atmospheric pressure and is stored in the CPU’s memory as various test functions:

Table 7-2: T700 Pressure Sensor Calibration Setup

SENSOR	ASSOCIATED TEST FUNCTION	UNITS	PRESSURE MONITOR MEASUREMENT POINT
Diluent Pressure Sensor	**DIL PRESSURE**	**PSIG**	Insert monitor just before the inlet port of the diluent MFC
Cal Gas Pressure Sensor	**CAL PRESSURE**	**PSIG**	Insert monitor just before the inlet port of the cal gas MFC
O_3 Regulator Pressure Sensor (Optional O_3 Generator)	**REG PRESSURE**	**PSIG**	Insert monitor in line between the regulator and the O_3 gas pressure sensor located on the O_3 generator / photometer pressure / flow sensor PCA
Sample Gas Pressure Sensor (Optional O_3 Photometer)	**PHOTO SPRESS**	**IN-HG-A**	Use monitor to measure ambient atmospheric pressure at the calibrator’s location.

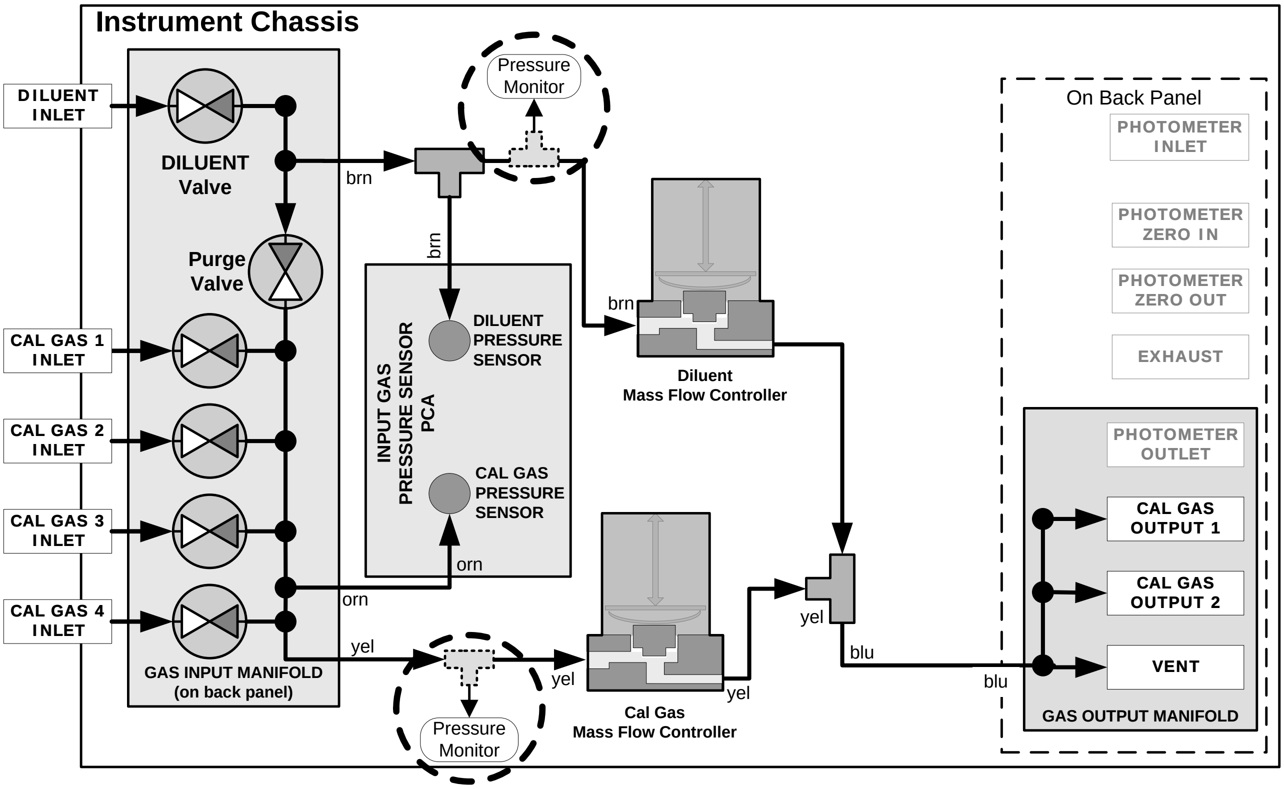
Instrument Chassis
DILUENT INLET
DILUENT Valve
Purge Valve
CAL GAS 1 INLET
CAL GAS 2 INLET
CAL GAS 3 INLET
CAL GAS 4 INLET
GAS INPUT MANIFOLD (on back panel)
Pressure Monitor
brn
INPUT GAS PRESSURE SENSOR PCA
DILUENT PRESSURE SENSOR
CAL GAS PRESSURE SENSOR
orn
yel
Diluent Mass Flow Controller
Cal Gas Mass Flow Controller
blu
On Back Panel
PHOTOMETER INLET
PHOTOMETER ZERO IN
PHOTOMETER ZERO OUT
EXHAUST
PHOTOMETER OUTLET
CAL GAS OUTPUT 1
CAL GAS OUTPUT 2
VENT
GAS OUTPUT MANIFOLD

Figure 7-6: Pressure Monitor Points – T700 – Basic Unit

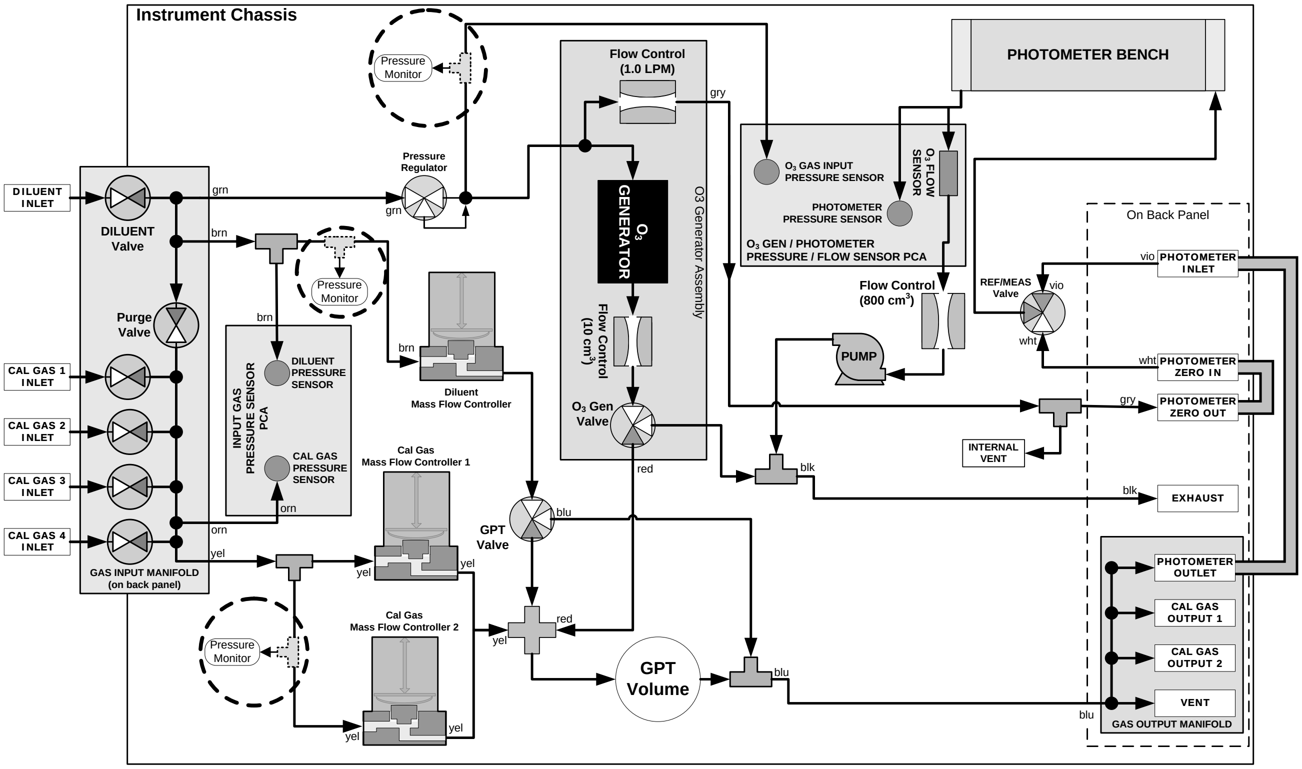
Instrument Chassis
Pressure Monitor
Pressure Regulator
grn
DILUENT INLET
DILUENT Valve
Purge Valve
CAL GAS 1 INLET
CAL GAS 2 INLET
CAL GAS 3 INLET
CAL GAS 4 INLET
GAS INPUT MANIFOLD (on back panel)
brn
INPUT GAS PRESSURE SENSOR PCA
DILUENT PRESSURE SENSOR
CAL GAS PRESSURE SENSOR
orn
yel
Diluent Mass Flow Controller
Cal Gas Mass Flow Controller 1
Cal Gas Mass Flow Controller 2
Flow Control (1.0 LPM)
gry
O3 GENERATOR
O3 Generator Assembly
Flow Control (10 cm3)
O3 Gen Valve
red
GPT Valve
blu
GPT Volume
PHOTOMETER BENCH
O3 GAS INPUT PRESSURE SENSOR
PHOTOMETER PRESSURE SENSOR
O3 FLOW SENSOR
O3 GEN / PHOTOMETER PRESSURE / FLOW SENSOR PCA
Flow Control (800 cm3)
PUMP
REF/MEAS Valve
vio
wht
blk
INTERNAL VENT
On Back Panel
PHOTOMETER INLET
PHOTOMETER ZERO IN
PHOTOMETER ZERO OUT
EXHAUST
PHOTOMETER OUTLET
CAL GAS OUTPUT 1
CAL GAS OUTPUT 2
VENT
GAS OUTPUT MANIFOLD

Figure 7-7: Pressure Monitor Points – T700 with O_3 Options and Multiple Cal MFCs Installed

7.5.1.1. **Calibrating the Diluent, Cal Gas Optional O_3 Generator Pressure Sensors**

1. Turn off the calibrator and open the top cover.
2. For the sensor being calibrated, insert a “T” pneumatic connector at the location described in Table 7-2 and shown in Figure 7-6 and Figure 7-7.
3. Turn on the calibrator and perform the following steps:

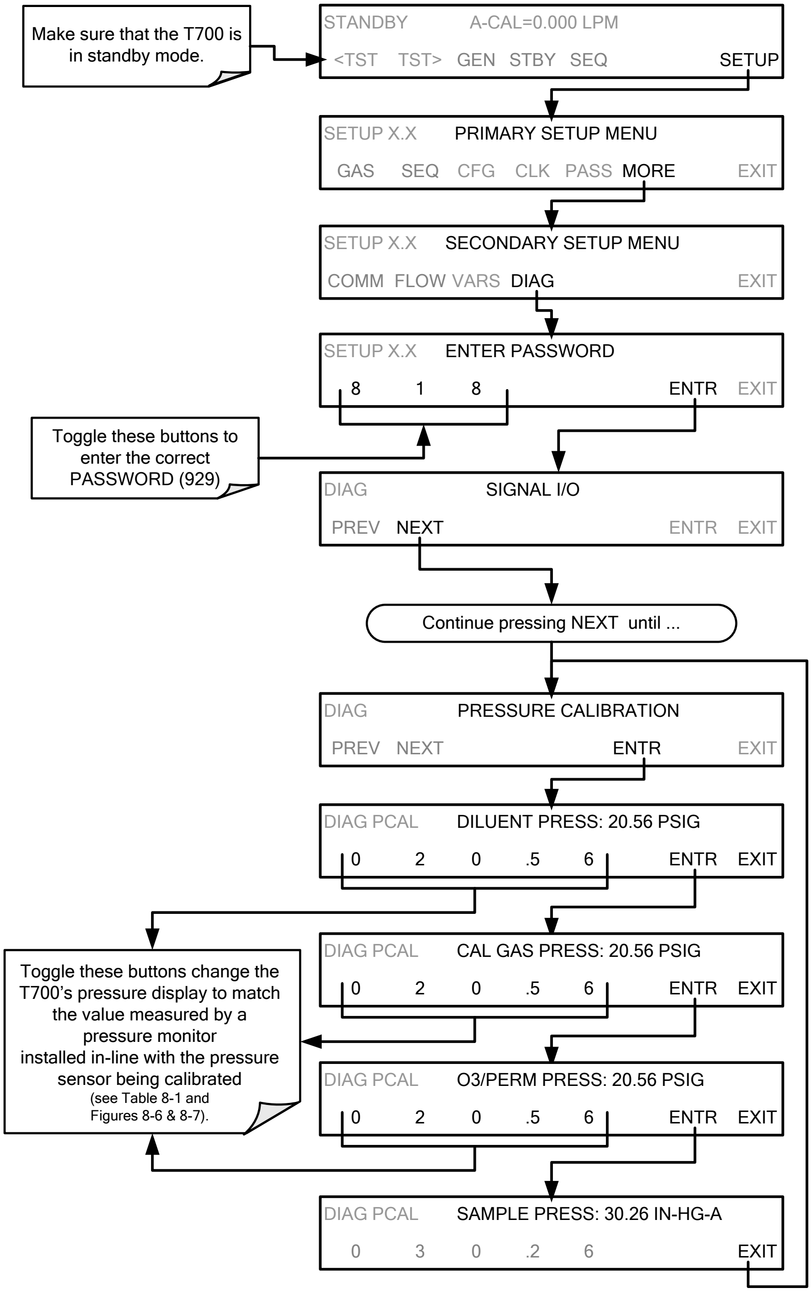

Make sure that the T700 is in standby mode.

Toggle these buttons to enter the correct PASSWORD (929)

Continue pressing NEXT until ...

Toggle these buttons change the T700’s pressure display to match the value measured by a pressure monitor installed in-line with the pressure sensor being calibrated (see Table 8-1 and Figures 8-6 & 8-7).

STANDBY A-CAL=0.000 LPM
<TST TST> GEN STBY SEQ SETUP
SETUP X.X PRIMARY SETUP MENU
GAS SEQ CFG CLK PASS MORE EXIT
SETUP X.X SECONDARY SETUP MENU
COMM FLOW VARS DIAG EXIT
SETUP X.X ENTER PASSWORD
8 1 8 ENTR EXIT
DIAG SIGNAL I/O
PREV NEXT ENTR EXIT
DIAG PRESSURE CALIBRATION
PREV NEXT ENTR EXIT
DIAG PCAL DILUENT PRESS: 20.56 PSIG
0 2 0 .5 6 ENTR EXIT
DIAG PCAL CAL GAS PRESS: 20.56 PSIG
0 2 0 .5 6 ENTR EXIT
DIAG PCAL O3/PERM PRESS: 20.56 PSIG
0 2 0 .5 6 ENTR EXIT
DIAG PCAL SAMPLE PRESS: 30.26 IN-HG-A
0 3 0 .2 6 EXIT

4. Turn OFF the T700.
5. Remove the pressure monitor.
6. Restore the pneumatic lines to their proper connections.
7. Close the calibrator’s cover.

7.5.1.2. Calibrating the Optional O_3 Photometer Sample Gas Pressure Sensors

Note **This calibration must be performed when the pressure of the photometer sample gas is equal to ambient atmospheric pressure.**

1. Turn off the calibrator and open the top cover.
2. Disconnect power to the photometer's internal pump.
3. Measure the ambient atmospheric pressure of T700's location in In-Hg-A.
4. Turn on the calibrator and perform the following steps:

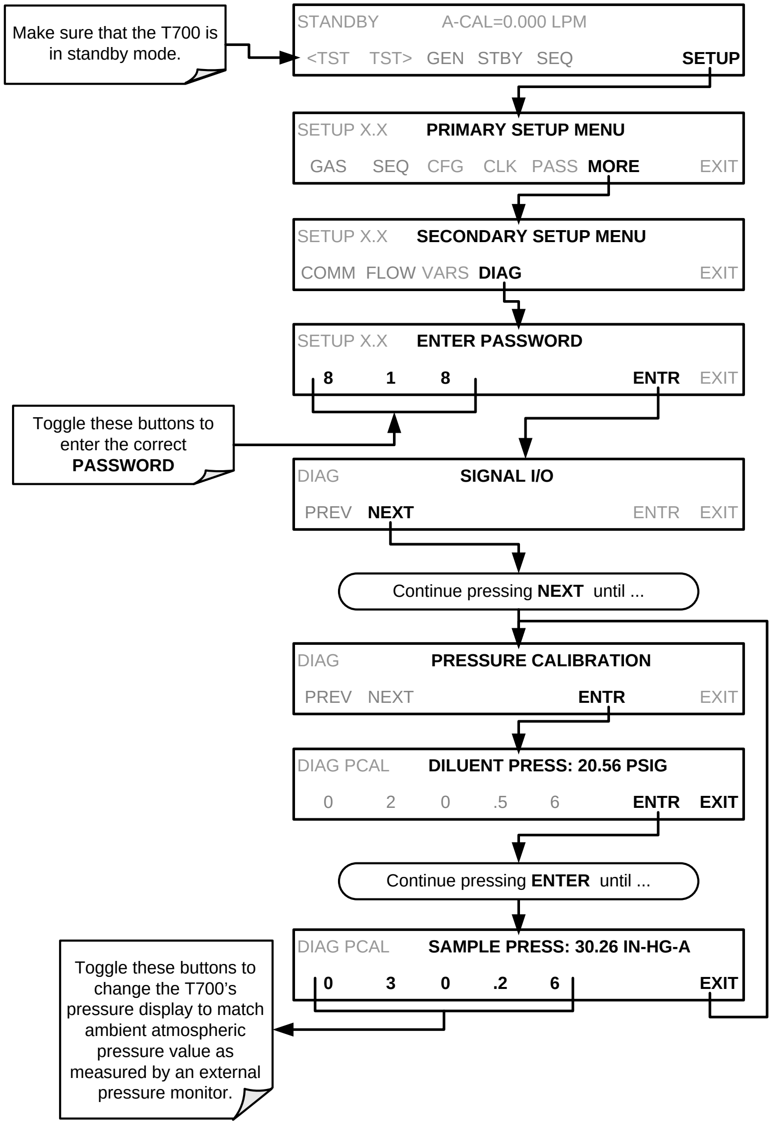
STANDBY A-CAL=0.000 LPM
<TST TST> GEN STBY SEQ SETUP
SETUP X.X PRIMARY SETUP MENU
GAS SEQ CFG CLK PASS MORE EXIT
SETUP X.X SECONDARY SETUP MENU
COMM FLOW VARS DIAG EXIT
SETUP X.X ENTER PASSWORD
8 1 8 ENTR EXIT
DIAG SIGNAL I/O
PREV NEXT ENTR EXIT
DIAG PRESSURE CALIBRATION
PREV NEXT ENTR EXIT
DIAG PCAL DILUENT PRESS: 20.56 PSIG
0 2 0 .5 6 ENTR EXIT
DIAG PCAL SAMPLE PRESS: 30.26 IN-HG-A
0 3 0 .2 6 EXIT

Make sure that the T700 is in standby mode.

Toggle these buttons to enter the correct **PASSWORD**

Continue pressing **NEXT** until ...

Continue pressing **ENTER** until ...

Toggle these buttons to change the T700's pressure display to match ambient atmospheric pressure value as measured by an external pressure monitor.

5. Turn OFF the T700.
6. Reconnect the internal pump.
7. Close the calibrator's cover.

8. MAINTENANCE

Predictive diagnostic functions including failure warnings and alarms built into the calibrator’s firmware allow the user to determine when repairs are necessary without performing painstaking preventative maintenance procedures.

For the most part, the T700 calibrator is maintenance free, there are, however, a minimal number of simple procedures that when performed regularly will ensure that the T700 photometer continues to operate accurately and reliably over its lifetime.

Repairs and troubleshooting are covered in Section 11 of this manual.

8.1. MAINTENANCE SCHEDULE

Table 8-1 shows a typical maintenance schedule for the T700. Please note that in certain environments (i.e. dusty, very high ambient pollutant levels) some maintenance procedures may need to be performed more often than shown.

Note **If the instrument has the optional O_3 photometer installed, a Span and Zero Calibration Check must be performed on the photometer following some of the maintenance procedure listed below. See Section 7.3 for instructions on performing checks.**

CAUTION

RISK OF ELECTRICAL SHOCK. DISCONNECT POWER BEFORE PERFORMING ANY OF THE FOLLOWING OPERATIONS THAT REQUIRE ENTRY INTO THE INTERIOR OF THE CALIBRATOR.

CAUTION

THE OPERATIONS OUTLINED IN THIS SECTION ARE TO BE PERFORMED BY QUALIFIED MAINTENANCE PERSONNEL ONLY.

Table 8-1: T700 Maintenance Schedule

Item	Action	Freq	Cal Check Req'd.[1]	Manual Section	Date Performed									
Verify Test Functions	Record and analyze	Weekly or after any Maintenance or Repair	No											
Pump Diaphragm[1]	**No Replacement Required. Under Normal Circumstances this Pump Will Last the Lifetime of the Instrument.**													
Absorption Tube[1]	Inspect - - - Clean	As Needed	Yes after cleaning	8.2.2	**Cleaning of the Photometer Absorption Tube Should Not Be Required as long as ONLY CLEAN, DRY, PARTICULATE FREE Zero Air (Diluent Gas) is used with the T700 Calibrator**									
Perform Flow Check	Verify Flow of MFCs	Annually or any time the T700's internal DAC is recalibrated	No	7.1 & 7.2										
Perform Leak Check	Verify Leak Tight	Annually or after any Maintenance or Repair	Yes	8.2.1										
Pneumatic lines	Examine and clean	As needed	Yes if cleaned	- - -										

[1] Only applies to T700 Calibrator's with O_3 photometer options installed.

8.2. MAINTENANCE PROCEDURES

The following procedures are to be performed periodically as part of the standard maintenance of the T700 calibrator.

8.2.1. AUTO LEAK CHECK

8.2.1.1. Equipment Required

- Four (4) 1/4" Pneumatic caps.
- One (1) 1/8" Pneumatic Cap
- One (1) # 6 hexagonal Driver/Wrench
- One (1) Pneumatic "T" fitting

8.2.1.2. Setup Auto Leak Check

To perform a leak-check on the T700 calibrator:

1. Remove the cover from the calibrator.
2. On Instruments with the optional O3 photometer installed, the photometer flow sensor PCA and pump must be bypassed:
   - Using a #6 nut driver, remove the hexagonal nut located at the top of the gas outlet of the photometer (see Figure 8-1).
   - Using a #6 nut driver, remove the hexagonal nut located on the fitting on the back side of the Flow/Pressure sensor board (see Figure 8-1).
   - Connect the end of the line removed from the Sensor PCA in Step 3 to the Photometer Outlet Fitting.

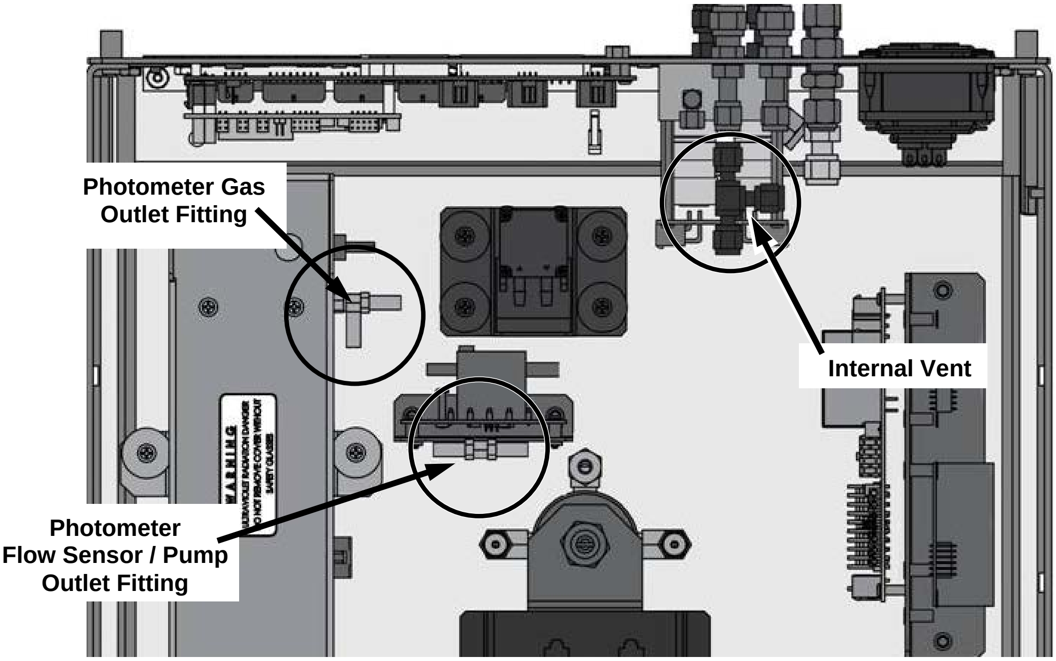
Photometer Gas Outlet Fitting
Internal Vent
Photometer Flow Sensor / Pump Outlet Fitting

Figure 8-1: Bypassing the Photometer Sensor PCA and Pump

3. Using the 1/8” cap, securely cover the outlet of the internal vent located just behind the valve relay PCA (see Figure 8-1).

4. Use the 1/4" caps to cover the following gas outlet ports on the back of the T700 (see Figure 8-2).
   - Exhaust (Only required for calibrators with O3 generators install).
   - Both Cal Gas 1 outlet ports.
   - The Vent port.

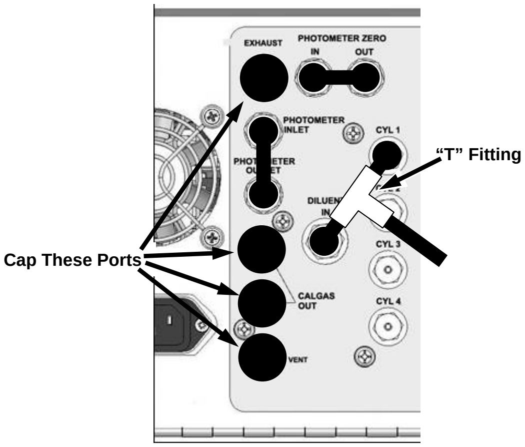
EXHAUST
PHOTOMETER ZERO
IN
OUT
PHOTOMETER INLET
PHOTOMETER OUTLET
CYL 1
“T” Fitting
DILUENT IN
CYL 3
Cap These Ports
CALGAS OUT
CYL 4
VENT

Figure 8-2: Gas Port Setup for Auto-Leak Check Procedure

5. If a bottle of source gas is connected to the CYL 1 port, remove it.

Note **Ensure that the gas outlet of the bottle is CLOSED before disconnecting the gas line from the CYL 1 port..**

6. Connect a gas line from the zero air gas source to the Diluent In and to the CYL 1 port using a “T” type pneumatic fitting (see Figure 8-2).

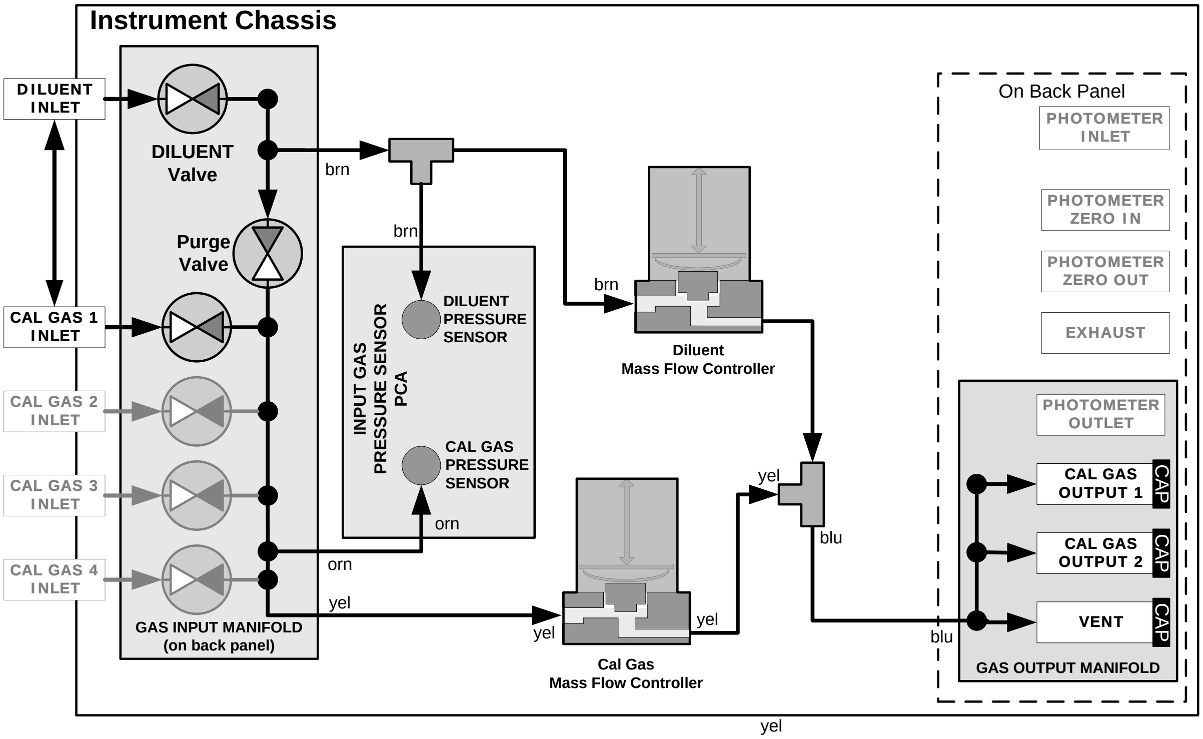
Instrument Chassis
DILUENT INLET
DILUENT Valve
Purge Valve
CAL GAS 1 INLET
CAL GAS 2 INLET
CAL GAS 3 INLET
CAL GAS 4 INLET
GAS INPUT MANIFOLD (on back panel)
brn
brn
brn
orn
orn
yel
INPUT GAS PRESSURE SENSOR PCA
DILUENT PRESSURE SENSOR
CAL GAS PRESSURE SENSOR
Diluent Mass Flow Controller
Cal Gas Mass Flow Controller
yel
yel
yel
blu
blu
yel
On Back Panel
PHOTOMETER INLET
PHOTOMETER ZERO IN
PHOTOMETER ZERO OUT
EXHAUST
PHOTOMETER OUTLET
CAL GAS OUTPUT 1
CAL GAS OUTPUT 2
VENT
CAP
CAP
CAP
GAS OUTPUT MANIFOLD

Figure 8-3: Gas Flow for Auto-Leak Check Procedure of Base Model T700’s

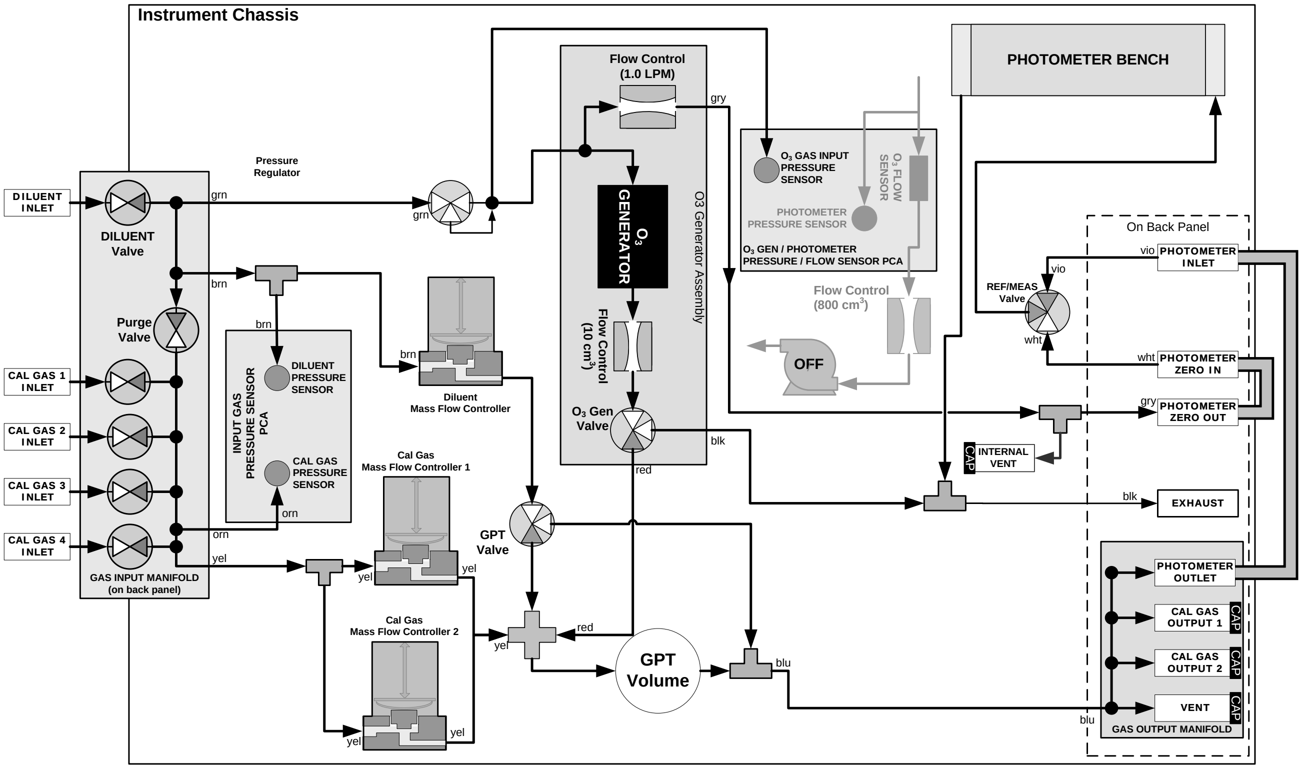
Instrument Chassis
DILUENT INLET
DILUENT Valve
Purge Valve
CAL GAS 1 INLET
CAL GAS 2 INLET
CAL GAS 3 INLET
CAL GAS 4 INLET
GAS INPUT MANIFOLD (on back panel)
Pressure Regulator
grn
grn
brn
brn
brn
orn
orn
yel
yel
yel
yel
yel
yel
INPUT GAS PRESSURE SENSOR PCA
DILUENT PRESSURE SENSOR
CAL GAS PRESSURE SENSOR
Diluent Mass Flow Controller
Cal Gas Mass Flow Controller 1
Cal Gas Mass Flow Controller 2
Flow Control (1.0 LPM)
gry
O_3 GENERATOR
O3 Generator Assembly
Flow Control (10 cm^3)
O_3 Gen Valve
red
red
blk
GPT Valve
GPT Volume
blu
blu
PHOTOMETER BENCH
O_3 GAS INPUT PRESSURE SENSOR
O_3 FLOW SENSOR
PHOTOMETER PRESSURE SENSOR
O_3 GEN / PHOTOMETER PRESSURE / FLOW SENSOR PCA
Flow Control (800 cm^3)
OFF
REF/MEAS Valve
vio
vio
wht
wht
gry
INTERNAL VENT
CAP
blk
On Back Panel
PHOTOMETER INLET
PHOTOMETER ZERO IN
PHOTOMETER ZERO OUT
EXHAUST
PHOTOMETER OUTLET
CAL GAS OUTPUT 1
CAL GAS OUTPUT 2
VENT
CAP
CAP
CAP
GAS OUTPUT MANIFOLD

Figure 8-4: Gas Flow for Auto-Leak Check Procedure of T700’s with Optional Photometer

8.2.1.3. **Performing the Auto Leak Check Procedure**

To perform an **AUTO LEAK CHECK**, press:

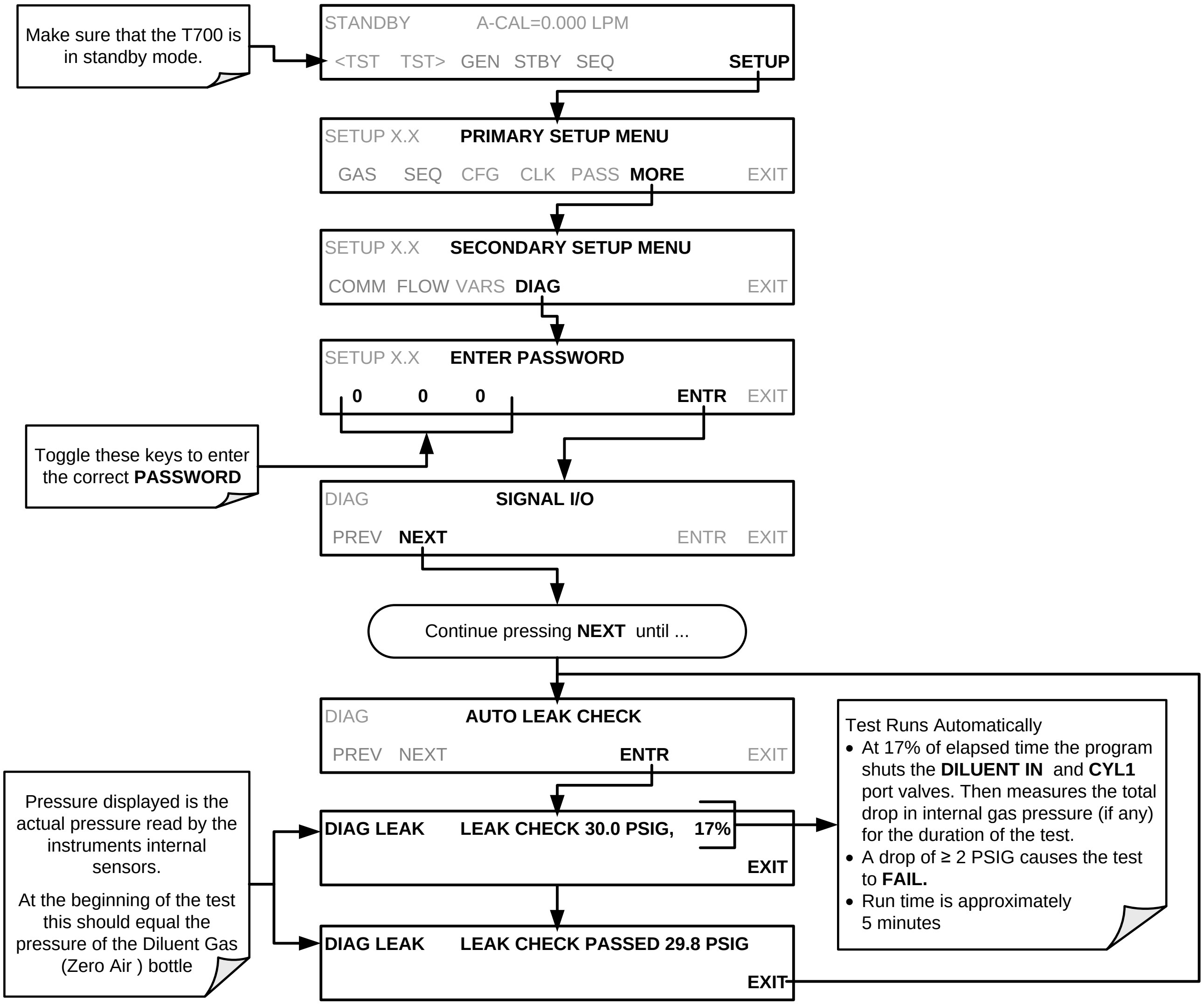
STANDBY A-CAL=0.000 LPM
<TST TST> GEN STBY SEQ **SETUP**
SETUP X.X **PRIMARY SETUP MENU**
GAS SEQ CFG CLK PASS **MORE** EXIT
SETUP X.X **SECONDARY SETUP MENU**
COMM FLOW VARS **DIAG** EXIT
SETUP X.X **ENTER PASSWORD**
0 0 0 **ENTR** EXIT
DIAG **SIGNAL I/O**
PREV **NEXT** ENTR EXIT
DIAG **AUTO LEAK CHECK**
PREV NEXT **ENTR** EXIT
DIAG LEAK LEAK CHECK 30.0 PSIG, 17%
EXIT
DIAG LEAK LEAK CHECK PASSED 29.8 PSIG
EXIT

Make sure that the T700 is in standby mode.

Toggle these keys to enter the correct **PASSWORD**

Continue pressing **NEXT** until ...

Pressure displayed is the actual pressure read by the instruments internal sensors.

At the beginning of the test this should equal the pressure of the Diluent Gas (Zero Air) bottle

Test Runs Automatically

- At 17% of elapsed time the program shuts the **DILUENT IN** and **CYL1** port valves. Then measures the total drop in internal gas pressure (if any) for the duration of the test.
- A drop of ≥ 2 PSIG causes the test to **FAIL.**
- Run time is approximately 5 minutes

8.2.1.4. **Returning the T700 to Service after Performing an Auto Leak Check**

1. Remove all of the caps from the EXHAUST, CAL GAS OUTPUTS (2) and the VENT port and from the internal vent.
2. On instruments with an optional O3 photometer, reconnect the internal gas lines so that the Sensor PCA and pump are functional.
3. Remove the tee from the DILUENT IN and CYL 1.
4. Reconnect the ZERO AIR SOURCE to the DILUENT IN.
5. Reconnect Cal Gas bottle to CYL 1 and open the bottles outlet port.
6. Replace the calibrator’s top cover.
7. The calibrator is now ready to be used.

8.2.2. CLEANING OR REPLACING THE ABSORPTION TUBE

Note **Although this procedure should never be needed as long as the user is careful to supply the photometer with clean, dry and particulate free zero air only, it is included here for those rare occasions when cleaning or replacing the absorption tube may be required.**

1. Remove the center cover from the optical bench.
2. Unclip the sample thermistor from the tube.
3. Loosen the two screws on the round tube retainers at either end of the tube.
4. Using both hands, carefully rotate the tube to free it.
5. Slide the tube towards the lamp housing.
   - The front of the tube can now be slid past the detector block and out of the instrument.

CAUTION

DO NOT CAUSE THE TUBE TO BIND AGAINST THE METAL HOUSINGS.
THE TUBE MAY BREAK AND CAUSE SERIOUS INJURY.

6. Clean the tube by rinsing with de-ionized water.
7. Air dry the tube.
8. Check the cleaning job by looking down the bore of the tube.
   - It should be free from dirt and lint.
9. Inspect the o-rings that seal the ends of the optical tube (these o-rings may stay seated in the manifolds when the tube is removed).
10. If there is any noticeable damage to these o-rings, they should be replaced.
11. Re-assemble the tube into the lamp housing and perform an Auto Leak Check on the instrument.

Note **It is important for proper optical alignment that the tube be pushed all the way towards the front of the optical bench when it is reassembled prior to gently retightening the tube retainer screws. This will ensure that the tube is assembled with the forward end against the stop inside the detector manifold.**

8.2.3. **UV SOURCE LAMP ADJUSTMENT**

This procedure provides in detail the steps for adjustment of the UV source lamp in the optical bench assembly. This procedure should be done whenever the **PHOTO REFERENCE** test function value drops below 3000 mV.

1. Ensure that the calibrator is warmed-up and has been running for at least 30 minutes before proceeding.
2. Remove the cover from the calibrator.
3. Locate the optional Photometer (see Figure 3-6).
4. Locate the UV detector gain adjust pot on the photometer assembly (see Figure 8-5).
5. Perform the following procedure:

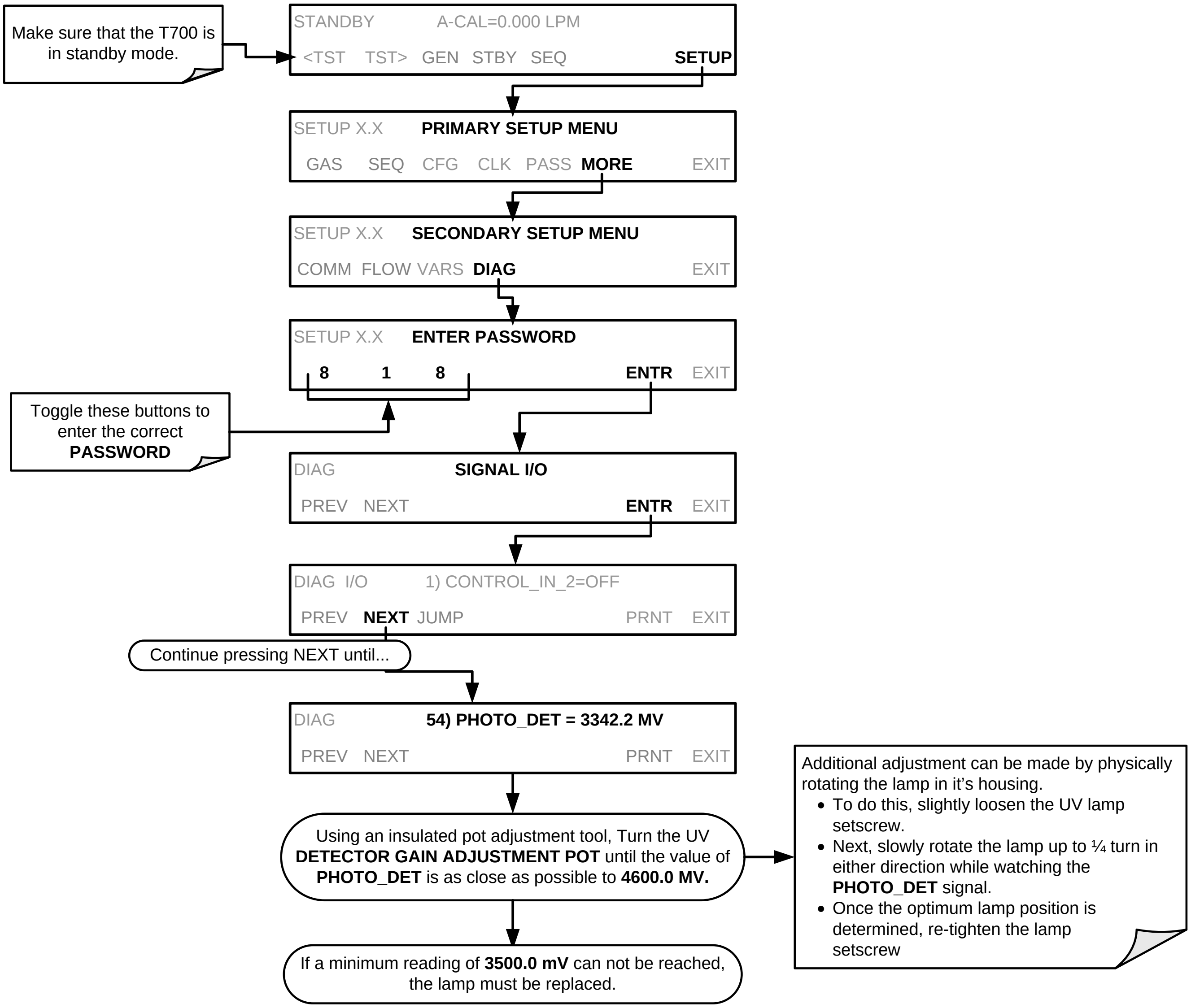
STANDBY A-CAL=0.000 LPM
<TST TST> GEN STBY SEQ **SETUP**
SETUP X.X **PRIMARY SETUP MENU**
GAS SEQ CFG CLK PASS **MORE** EXIT
SETUP X.X **SECONDARY SETUP MENU**
COMM FLOW VARS **DIAG** EXIT
SETUP X.X **ENTER PASSWORD**
8 1 8 **ENTR** EXIT
DIAG **SIGNAL I/O**
PREV NEXT **ENTR** EXIT
DIAG I/O 1) CONTROL_IN_2=OFF
PREV **NEXT** JUMP PRNT EXIT
DIAG **54) PHOTO_DET = 3342.2 MV**
PREV NEXT PRNT EXIT

Make sure that the T700 is in standby mode.

Toggle these buttons to enter the correct **PASSWORD**

Continue pressing NEXT until...

Using an insulated pot adjustment tool, Turn the UV **DETECTOR GAIN ADJUSTMENT POT** until the value of **PHOTO_DET** is as close as possible to **4600.0 MV.**

If a minimum reading of **3500.0 mV** can not be reached, the lamp must be replaced.

Additional adjustment can be made by physically rotating the lamp in it's housing.

- To do this, slightly loosen the UV lamp setscrew.
- Next, slowly rotate the lamp up to ¼ turn in either direction while watching the **PHOTO_DET** signal.
- Once the optimum lamp position is determined, re-tighten the lamp setscrew

6. Replace the cover on the calibrator.

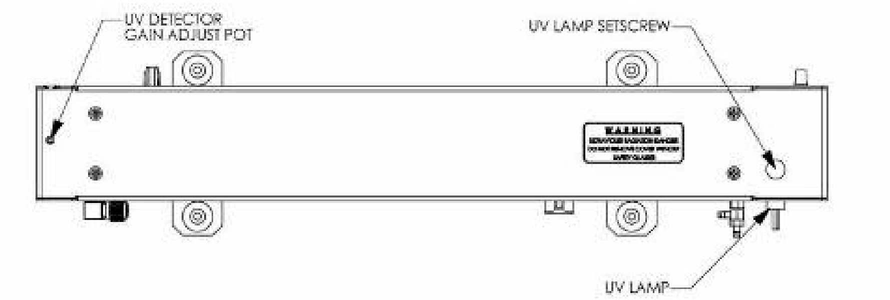

Figure 8-5: Photometer Assembly – Lamp Adjustment / Installation

8.2.4. UV SOURCE LAMP REPLACEMENT

This procedure details the steps for replacement of the UV source lamp in the optical bench assembly. This procedure should be done whenever the lamp can no longer be adjusted as described in Section 8.2.3.

1. Turn the calibrator off.
2. Remove the cover from the calibrator.
3. Locate the Optical Bench Assembly (see Figure 3-6).
4. Locate the UV lamp at the front of the optical bench assembly (see Figure 8-5).
5. Unplug the lamp cable from the power supply connector on the side of the optical bench.
6. Slightly loosen (do not remove) the UV lamp setscrew and pull the lamp from its housing.
7. Install the new lamp in the housing, pushing it all the way in. Leave the UV lamp setscrew loose for now.
8. Turn the calibrator back on and allow it to warm up for at least 30 minutes.
9. Turn the UV detector gain adjustment pot (See Figure 8-5) clockwise to its minimum value. The pot may click softly when the limit is reached.
10. Perform the UV Lamp Adjustment procedure described in Section 8.2.3, with the following exceptions:
    a) Slowly rotate the lamp in its housing (up to ¼ turn in either direction) until a **MINIMUM** value is observed.
        - Ensure the lamp is pushed all the way into the housing while performing this rotation.
        - If the PHOTO_DET will not drop below 5000 mV while performing this rotation, contact Teledyne API'S Technical Support for assistance.

    b) Once a lamp position is found that corresponds to a minimum observed value for **PHOTO_DET**, tighten the lamp setscrew at the approximate minimum value observed.

    c) Adjust PHOTO_DET within the range of 4400 – 4600 mV.
11. Replace the cover on the calibrator.

CAUTION

The UV lamp contains mercury (Hg), which is considered hazardous waste. The lamp should be disposed of in accordance with local regulations regarding waste containing mercury.

8.2.5. OZONE GENERATOR UV LAMP ADJUSTMENT OR REPLACEMENT

This procedure details the steps for replacement and initial adjustment of the ozone generator lamp. If you are adjusting an existing lamp, skip to Step 8.

1. Turn off the calibrator.
2. Remove the cover from the calibrator.
3. Locate the O_3 generator (see Figure 3-6).

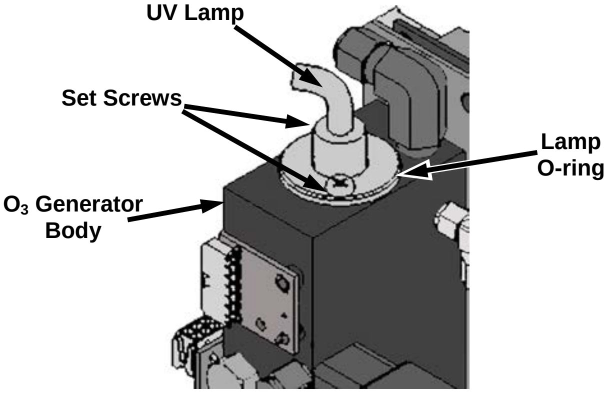

Figure 8-6: O_3 Generator UV Lamp Location

4. Remove the two setscrews on the top of the O_3 generator and gently pull out the old lamp.
5. Inspect the o-ring beneath the nut and replace if damaged.
6. Install the new lamp in O_3 generator housing, ensuring that it is fully seated.
7. Tighten the two setscrew
8. Turn on calibrator and allow it to stabilize for at least 30 minutes.
9. Replace the calibrator’s cover.
10. Perform an auto-leak check (See Section 8.2.1).
11. Perform an Ozone Generator calibration (see Section 7.4).

.

9. TROUBLESHOOTING AND SERVICE

This section contains a variety of methods for identifying and solving performance problems with the calibrator.

ATTENTION

The operations outlined in this section must be performed by qualified maintenance personnel only.

WARNING

- Risk of electrical shock. Some operations need to be carried out with the instrument open and running.
- Exercise caution to avoid electrical shocks and electrostatic or mechanical damage to the calibrator.
- Do not drop tools into the calibrator or leave those after your procedures.
- Do not shorten or touch electric connections with metallic tools while operating inside the calibrator.
- Use common sense when operating inside a running calibrator.

9.1. GENERAL TROUBLESHOOTING

The T700 Dynamic Dilution Calibrator has been designed so that problems can be rapidly detected, evaluated and repaired. During operation, it continuously performs diagnostic tests and provides the ability to evaluate its operating parameters without disturbing monitoring operations.

A systematic approach to troubleshooting will generally consist of the following five steps:

1. Note any warning messages and take corrective action as necessary.
2. Examine the values of all TEST functions and compare them to factory values. Note any major deviations from the factory values and take corrective action.

3. Use the internal electronic status LEDs to determine whether the electronic communication channels are operating properly.
   - Verify that the DC power supplies are operating properly by checking the voltage test points on the relay PCA.
   - Note that the calibrator's DC power wiring is color-coded and these colors match the color of the corresponding test points on the relay PCA.

4. Follow the procedures defined in Section 3.4.3 to confirm that the calibrator's vital functions are working (power supplies, CPU, relay PCA, etc.).
   - See Figure 3-5 and Figure 3-6 for general layout of components and sub-assemblies in the calibrator.
   - See the wiring interconnect diagram and interconnect list in Appendix D.

9.1.1. FAULT DIAGNOSIS WITH WARNING MESSAGES

The most common and/or serious instrument failures will result in a warning message being displayed on the front panel. Table 9-1 lists warning messages, along with their meaning and recommended corrective action.

It should be noted that if more than two or three warning messages occur at the same time, it is often an indication that some fundamental sub-system (power supply, relay PCA, motherboard) has failed rather than indication of the specific failures referenced by the warnings. In this case, it is recommended that proper operation of power supplies (See Section 9.4.3), the relay PCA (See Section 9.4.7), and the motherboard (See Section9.4.11) be confirmed before addressing the specific warning messages.

The T700 will alert the user that a Warning Message is active by flashing the FAULT LED, displaying the Warning message in the Param field along with the **CLR** button (press to clear Warning message). The **MSG** button displays if there is more than one warning in queue or if you are in the TEST menu and have not yet cleared the message. The following display/touchscreen examples provide an illustration of each:

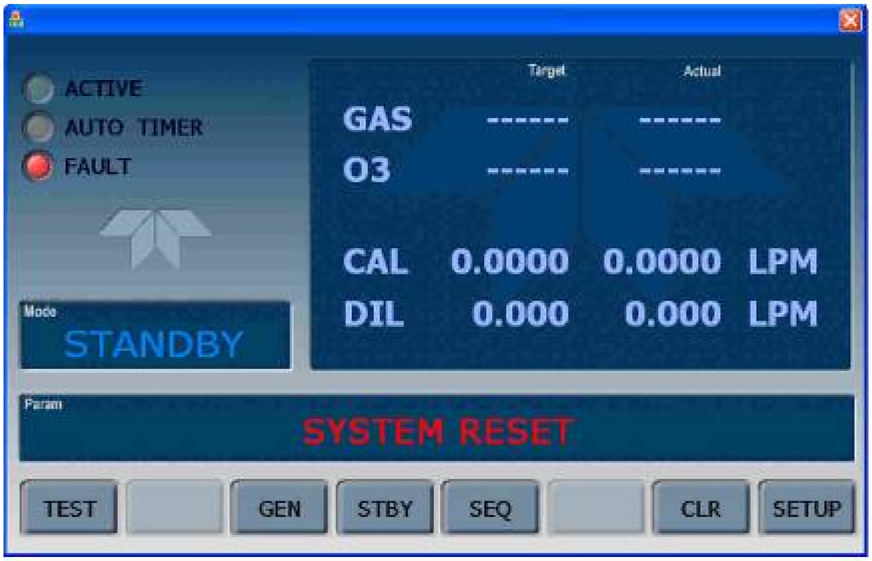
ACTIVE
AUTO TIMER
FAULT
Target
Actual
Mode
Param
TEST
GEN
STBY
SEQ
CLR
SETUP

	Target	Actual	
GAS	------	------	
O3	------	------	
CAL	0.0000	0.0000	LPM
DIL	0.000	0.000	LPM

Mode: STANDBY

Param: SYSTEM RESET

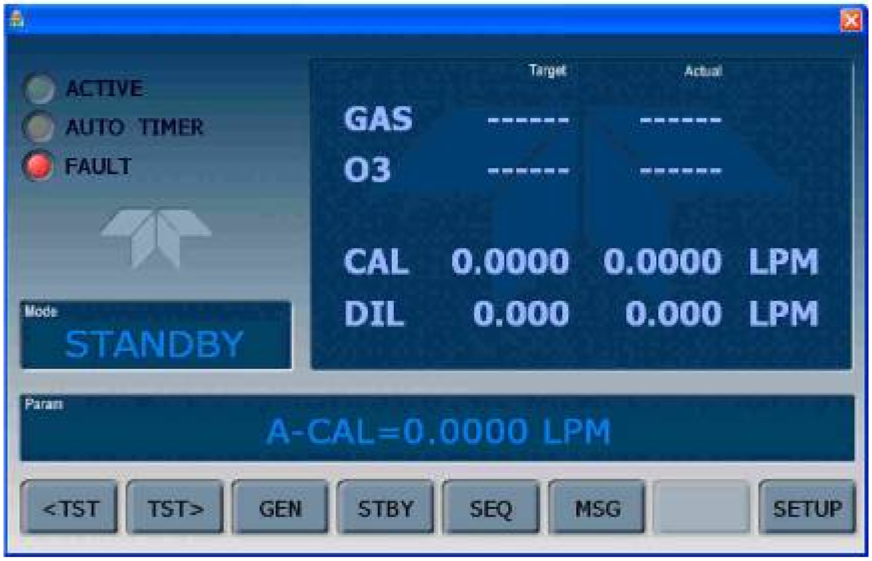
ACTIVE
AUTO TIMER
FAULT
Target
Actual
Mode
Param
<TST
TST>
GEN
STBY
SEQ
MSG
SETUP

	Target	Actual	
GAS	------	------	
O3	------	------	
CAL	0.0000	0.0000	LPM
DIL	0.000	0.000	LPM

Mode: STANDBY

Param: A-CAL=0.0000 LPM

The calibrator will also alert the user via the Serial I/O COMM port(s) and cause the FAULT LED on the front panel to blink.

To view or clear the various warning messages press:

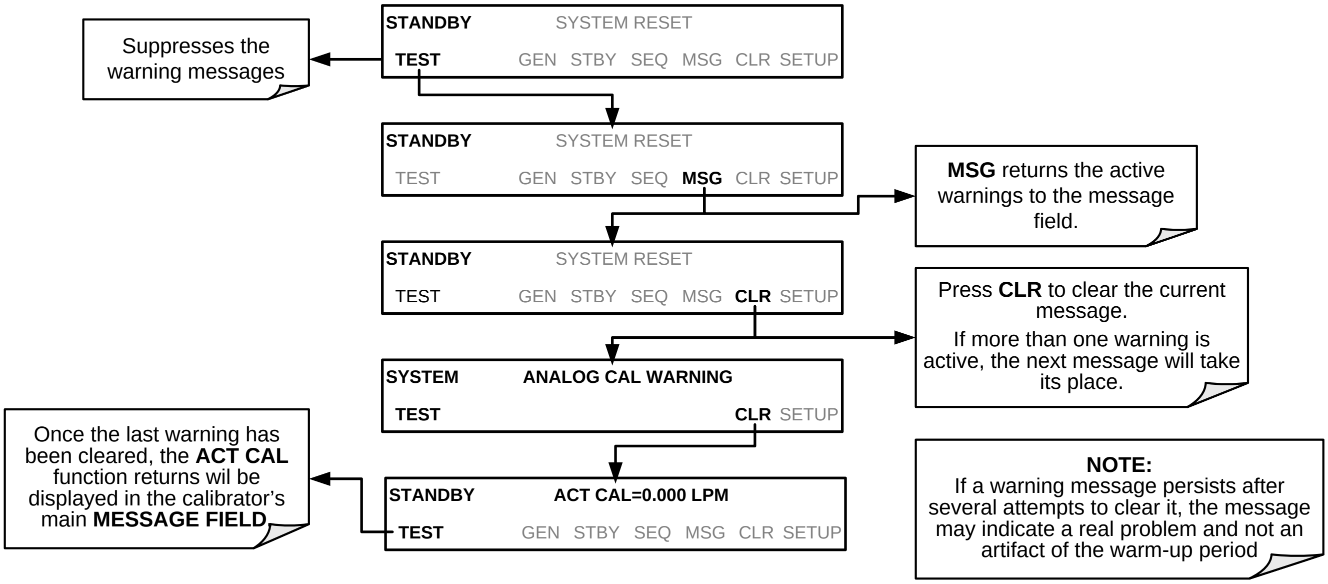
STANDBY
SYSTEM RESET
TEST
GEN
STBY
SEQ
MSG
CLR
SETUP
STANDBY
SYSTEM RESET
TEST
GEN
STBY
SEQ
MSG
CLR
SETUP
STANDBY
SYSTEM RESET
TEST
GEN
STBY
SEQ
MSG
CLR
SETUP
SYSTEM
ANALOG CAL WARNING
TEST
CLR
SETUP
STANDBY
ACT CAL=0.000 LPM
TEST
GEN
STBY
SEQ
MSG
CLR
SETUP

Suppresses the warning messages

MSG returns the active warnings to the message field.

Press **CLR** to clear the current message.

If more than one warning is active, the next message will take its place.

NOTE:
If a warning message persists after several attempts to clear it, the message may indicate a real problem and not an artifact of the warm-up period

Once the last warning has been cleared, the **ACT CAL** function returns wil be displayed in the calibrator's main **MESSAGE FIELD**

Table 9-1: Warning Messages in Front Panel Display Param Field

WARNING	FAULT CONDITION	POSSIBLE CAUSES
CONFIG INITIALIZED	Configuration and Calibration data reset to original Factory state.	- Failed Disk-on-Module - User has erased configuration data
DATA INITIALIZED	Data Storage in DAS was erased.	- Failed Disk-on-Module. - User cleared data.
LAMP DRIVER WARN[1, 2]	The CPU is unable to communicate with either the O_3 generator or photometer lamp I^2C driver chip.	- I^2C has failed
MFC COMMUNICATION WARNING	Firmware is unable to communicate with any MFC.	- I^2C has failed - One of the MFCs has failed - Cabling loose or broken between MFC and motherboard
MFC PRESSURE WARNING	One of the calibrator's mass flow controllers internal gas pressure is <15 PSIG or > 36 PSIG	- Zero or source air supply is incorrectly set up or improperly vented. - Leak or blockage exists in the T700's internal pneumatics - Failed CAL GAS or DUILUENT pressure sensor
O3 GEN LAMP TEMP WARNING[1]	IZS Ozone Generator Temp is outside of control range of 48°C ± 3°C.	- No IZS option installed, instrument improperly configured - O_3 generator heater - O_3 generator temperature sensor - Relay controlling the O_3 generator heater - Entire Relay PCA - I^2C Bus
O3 PUMP WARNING[1]	The photometer pump failed to turn on within the specified timeout period (default = 30 sec.).	- Failed Pump - Problem with Relay PCA - 12 VDC power supply problem
PHOTO LAMP TEMP WARNING[2]	The photometer lamp temp is < 51°C or >61°C.	Possible failure of: - Bench lamp heater - Bench lamp temperature sensor - Relay controlling the bench heater - Entire Relay PCA - I^2C Bus - Hot Lamp
PHOTO LAMP STABILITY WARNING	Value output during the Photometer's reference cycle changes from measurements to measurement more than 25% of the time.	- Faulty UV source lamp - Noisy UV detector - Faulty UV lamp power supply - Faulty ± 15 VDC power supply
PHOTO REFERENCE WARNING[2]	Occurs when Ref is <2500 mVDC or >4950 mVDC.	Possible failure of: - UV Lamp - UV Photo-Detector Preamp
REAR BOARD NOT DET	Motherboard not detected on power up.	- This warning only appears on Serial I/O COMM Port(s) Front Panel Display will be frozen, blank or will not respond. - Failure of motherboard

WARNING	FAULT CONDITION	POSSIBLE CAUSES
REGULATOR PRESSURE WARNING	Regulator pressure is < 15 PSIG or > 25 PSIG.	- Zero or source air supply is incorrectly set up or improperly vented. - Incorrectly adjusted O_3 zero air pressure regulator - Leak or blockage exists in the T700's internal pneumatics - Failed O_3 Generator Input pressure sensor
RELAY BOARD WARN	The CPU cannot communicate with the Relay PCA.	- I^2C Bus failure - Failed relay PCA - Loose connectors/wiring
SYSTEM RESET	The computer has rebooted.	- This message occurs at power on. - If it is confirmed that power has not been interrupted - Failed +5 VDC power - Fatal error caused software to restart - Loose connector/wiring
VALVE BOARD WARN	The CPU is unable to communicate with the valve board.	- I^2C Bus failure - Failed valve driver PCA - Loose connectors/wiring

[1] Only applicable for calibrators with the optional the O_3 generator installed.

[2] Only applicable for calibrators with the optional photometer installed.

[3] On instrument with multiple Cal Gas MFCs installed, the **MFC FLOW WARNING** occurs when the flow rate requested is <10% of the range of the lowest rated MFC (i.e. all of the cal gas MFC are turned off).

9.1.2. FAULT DIAGNOSIS WITH TEST FUNCTIONS

Besides being useful as predictive diagnostic tools, the test functions viewable from the calibrator's front panel can be used to isolate and identify many operational problems when combined with a thorough understanding of the calibrator's Theory of Operation (see Section 10).

The acceptable ranges for these test functions are listed in the "Nominal Range" column of the calibrator Final Test and Validation Data Sheet shipped with the instrument. Values outside these acceptable ranges indicate a failure of one or more of the calibrator's subsystems. Functions whose values are still within acceptable ranges but have significantly changed from the measurement recorded on the factory data sheet may also indicate a failure.

A worksheet has been provided in Appendix C to assist in recording the values of these Test Functions.

Table 9-2 contains some of the more common causes for these values to be out of range.

Table 9-2: Test Functions – Indicated Failures

TEST FUNCTION	DIAGNOSTIC RELEVANCE AND CAUSES OF FAULT CONDITIONS.
O3FLOW[1]	Gas flow problems directly affect the concentration accuracy of the T700's calibration gas mixtures. - Check for Gas Flow problems.
O3GENDRV[1]	Check the O_3 generator heater and temperature sensors. Possible causes of faults are the same as **O3 GEN LAMP TEMP WARNING** from Table 9-1.
O3LAMPTMP[1]	Incorrect Lamp temperature can affect the efficiency and durability of the O_3 generators UV lamp. Possible causes of faults are the same as **O3 GEN LAMP TEMP WARNING** from Table 9-1.
CAL PRES	Affects proper flow rate of Cal gas MFCs. Possible causes of faults are the same as **MFC PRESSURE WARNING** from Table 9-1.
DIL PRES	Affects proper flow rate of Diluent gas MFCs. Possible causes of faults are the same as **MFC PRESSURE WARNING** from Table 9-1.
REG PRES	Same as **REGULATOR PRESSURE WARNING** from Table 9-1.
BOX TMP	Box Temperature typically runs ~7°C warmer than ambient temperature. If the Box Temperature is out of range, ensure that the: - the exhaust fan is running. - there is sufficient space on the exterior sides and rear of the instrument to allow adequate ventilation.
PH MEAS[2] **&** **PH REF**[2]	If the value displayed is too high the UV Source has become brighter. Adjust the variable gain potentiometer on the UV Preamp Board in the optical bench. If the value displayed is too low: - < 200mV – Bad UV lamp or UV lamp power supply. - < 2500mV – Lamp output has dropped, adjust UV Preamp Board or replace lamp. If the value displayed is constantly changing: - Bad UV lamp. - Defective UV lamp power supply. - Failed I^2C Bus. If the PHOTO REFERENCE value changes by more than 10mV between zero and span gas: - Defective/leaking switching valve.
PH FLW[2]	Gas flow problems directly affect the accuracy of the photometer measurements and therefore the concentration accuracy of cal gas mixtures involving O_3 and GPT mixtures. - Check for Gas Flow problems.
PH LTEMP[2]	Poor photometer temp control can cause instrument noise, stability and drift. Temperatures outside of the specified range or oscillating temperatures are cause for concern. Possible causes of faults are the same as **PHOTO LAMP TEMP WARNING from** Table 9-1.
PH PRES[2]	The pressure of the gas in the photometer's sample chamber is used to calculate the concentration of O_3 in the gas stream. Incorrect sample pressure can cause inaccurate readings. - Check for Gas Flow problems. See Section Table 9-1.

TEST FUNCTION	DIAGNOSTIC RELEVANCE AND CAUSES OF FAULT CONDITIONS.
PH STEMP^2	The temperature of the gas in the photometer's sample chamber is used to calculate the concentration of O_3 in the gas stream. Incorrect sample temperature can cause inaccurate readings. Possible causes of faults are: - Bad bench lamp heater - Failed sample temperature sensor - Failed relay controlling the bench heater - Failed Relay PCA - I^2C Bus malfunction - Hot lamp
PH SLOPE^2	Values outside range indicate: ▪ Contamination of the Zero Air or Span Gas supply. ▪ Instrument is miss-calibrated. ▪ Blocked Gas Flow. ▪ Faulty Sample Pressure Sensor or circuitry. ▪ Bad/incorrect Span Gas concentration.
PH OFFST^2	Values outside range indicate: ▪ Contamination of the Zero Air supply.
TIME	Time of Day clock is too fast or slow. ▪ To adjust see Section 4.5. ▪ Battery in clock chip on CPU board may be dead.
[1] Only appears when the optional O_3 generator is installed. [2] Only appears when the optional O_3 photometer is installed	

9.1.3. USING THE DIAGNOSTIC SIGNAL I/O FUNCTION

The Signal I/O parameters found under the DIAG Menu combined with a thorough understanding of the instrument's Theory of Operation (found in Section 0) are useful for troubleshooting in three ways:

- The technician can view the raw, unprocessed signal level of the calibrator's critical inputs and outputs.
- Many of the components and functions that are normally under algorithmic control of the CPU can be manually exercised.
- The technician can directly control the signal level Analog and Digital Output signals.

This allows the technician to observe systematically the effect of directly controlling these signals on the operation of the calibrator. Figure 9-1 is an example of how to use the Signal I/O menu to view the raw voltage of an input signal or to control the state of an output voltage or control signal. The specific parameter will vary depending on the situation.

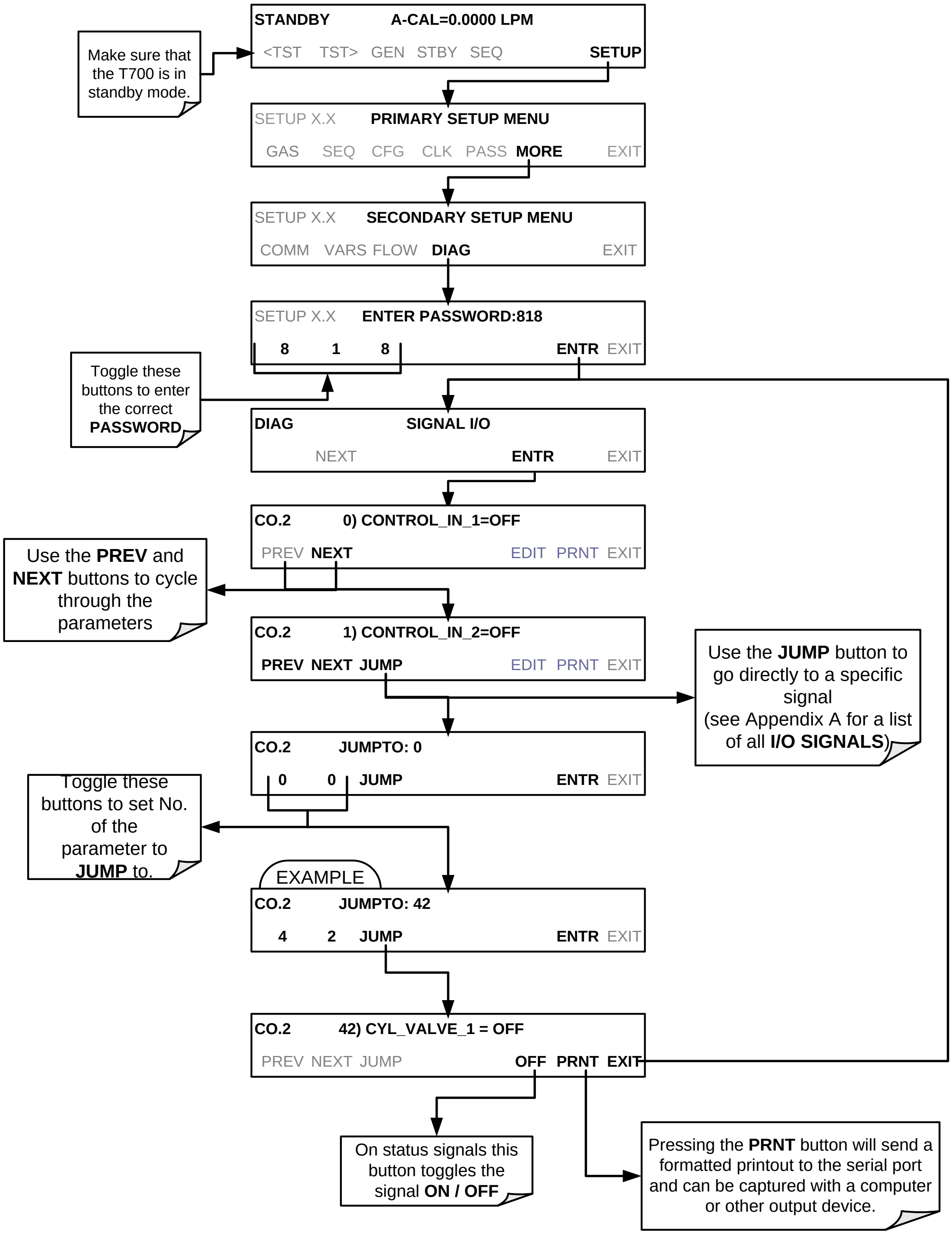
STANDBY A-CAL=0.0000 LPM
<TST TST> GEN STBY SEQ SETUP
SETUP X.X PRIMARY SETUP MENU
GAS SEQ CFG CLK PASS MORE EXIT
SETUP X.X SECONDARY SETUP MENU
COMM VARS FLOW DIAG EXIT
SETUP X.X ENTER PASSWORD:818
8 1 8 ENTR EXIT
DIAG SIGNAL I/O
NEXT ENTR EXIT
CO.2 0) CONTROL_IN_1=OFF
PREV NEXT EDIT PRNT EXIT
CO.2 1) CONTROL_IN_2=OFF
PREV NEXT JUMP EDIT PRNT EXIT
CO.2 JUMPTO: 0
0 0 JUMP ENTR EXIT
EXAMPLE
CO.2 JUMPTO: 42
4 2 JUMP ENTR EXIT
CO.2 42) CYL_VALVE_1 = OFF
PREV NEXT JUMP OFF PRNT EXIT

Make sure that the T700 is in standby mode.

Toggle these buttons to enter the correct **PASSWORD**

Use the **PREV** and **NEXT** buttons to cycle through the parameters

Use the **JUMP** button to go directly to a specific signal (see Appendix A for a list of all **I/O SIGNALS**)

Toggle these buttons to set No. of the parameter to **JUMP** to.

On status signals this button toggles the signal **ON / OFF**

Pressing the **PRNT** button will send a formatted printout to the serial port and can be captured with a computer or other output device.

Figure 9-1: Example of Signal I/O Function

9.2. USING THE ANALOG OUTPUT TEST CHANNEL

The signals available for output over the T700's analog output channel can also be used as diagnostic tools. See Section 4.7 for instruction on activating the analog output and selecting a function.

Table 9-3: Test Channel Outputs as Diagnostic Tools

TEST CHANNEL	DESCRIPTION	ZERO	FULL SCALE	CAUSES OF EXTREMELY HIGH / LOW READINGS
NONE	**TEST CHANNEL IS TURNED OFF**			
O3 PHOTO MEAS	The raw output of the photometer during its measure cycle	0 mV	5000 mV*	If the value displayed is: - >5000 mV: The UV source has become brighter; adjust the UV Detector Gain potentiometer. - < 100mV – Bad UV lamp or UV lamp power supply. - < 2500mV – Lamp output has dropped, adjust UV Preamp Board or replace lamp. If the value displayed is constantly changing: - Bad UV lamp. - Defective UV lamp power supply. - Failed I^2C Bus. If the PHOTO REFERENCE value changes by more than 10mV between zero and span gas: - Defective/leaking M/R switching valve.
O3 PHOTO REF	The raw output of the photometer during its reference cycle	0 mV	5000 mV	
SAMPLE PRESSURE	The pressure of gas in the photometer absorption tube	0 "Hg	40 "Hg-In-A	Check for Gas Flow problems.
SAMPLE FLOW	The gas flow rate through the photometer	0 cm^3/min	1000 cm^3/m	Check for Gas Flow problems.
SAMPLE TEMP	The temperature of gas in the photometer absorption tube	0 C°	70 C°	Possible causes of faults are the same as **PHOTO STEMP** from Table 9-2.
PHOTO LAMP TEMP	The temperature of the photometer UV lamp	0 C°	70 C°	Possible failure of: - Bench lamp heater - Bench lamp temperature sensor - Relay controlling the bench heater - Entire Relay PCA - I^2C Bus - Hot Lamp
O3 LAMP TEMP	The temperature of the O_3 generator's UV lamp	0 mV	5000 mV	Same as **PHOTO LAMP TEMP WARNING from** Table 9-1.
CHASSIS TEMP	The temperature inside the T700's chassis (same as **BOX TEMP**)	0 C°	70 C°	Possible causes of faults are the same as **BOX TEMP** from Table 9-2.
O3 PHOTO CONC	The current concentration of O_3 being measured by the photometer.	- - -		- I^2C Bus malfunction - Gas flow problem through the photometer. - Electronic failure of the photometer subsystems. - Failure or pressure / temperature sensors associated with the photometer. - Bad/incorrect Span Gas concentration. - Contamination of the Zero Air supply. - Malfunction of the O_3 generator. - Internal A/D converter problem.

9.3. USING THE INTERNAL ELECTRONIC STATUS LEDS

Several LEDs are located inside the instrument to assist in determining if the calibrators CPU, I^2C bus and Relay PCA are functioning properly.

9.3.1. CPU STATUS INDICATOR

DS5, a red LED, that is located on upper portion of the motherboard, just to the right of the CPU board, flashes when the CPU is running the main program loop. After power-up, approximately 30 – 60 seconds, DS5 should flash on and off. If DS5 does not flash then the program files may have become corrupted; contact Technical Support because it may be possible to recover operation of the calibrator. If after 30 – 60 seconds, DS5 is flashing, then the CPU is bad and must be replaced.

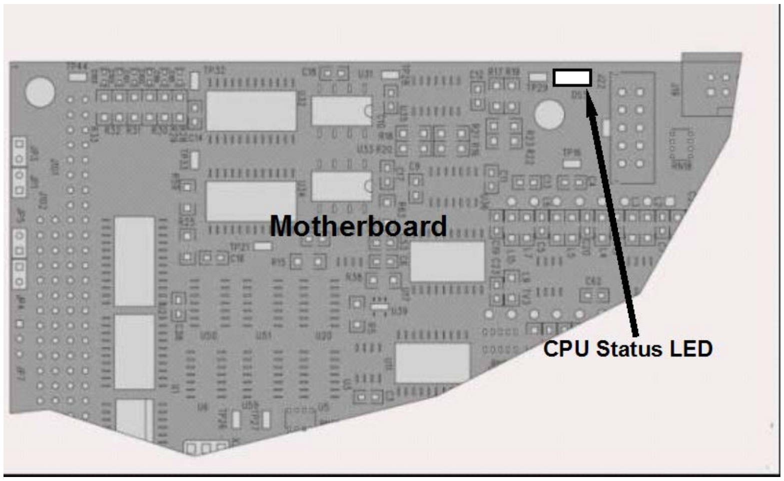

Figure 9-2: CPU Status Indicator

9.3.2. RELAY PCA STATUS LEDS

There are seven LEDs located on the Relay PCA. Some are not used on this model.

9.3.2.1. I^2C Bus Watchdog Status LEDs

The most important is D1, which indicates the health of the I^2C bus).

Table 9-4: Relay PCA Watchdog LED Failure Indications

LED	Function	Fault Status	Indicated Failure(s)
D1 (Red)	I^2C bus Health (Watchdog Circuit)	Continuously ON or Continuously OFF	Failed/Halted CPU Faulty motherboard, valve driver board or relay PCA Faulty connectors/wiring between motherboard, valve driver board or relay PCA Failed/Faulty +5 VDC power supply (PS1)

If D1 is blinking, then the other LEDs can be used in conjunction with **DIAG** Menu Signal I/O to identify hardware failures of the relays and switches on the Relay.

9.3.2.2. **O$_3$ Option Status LEDs**

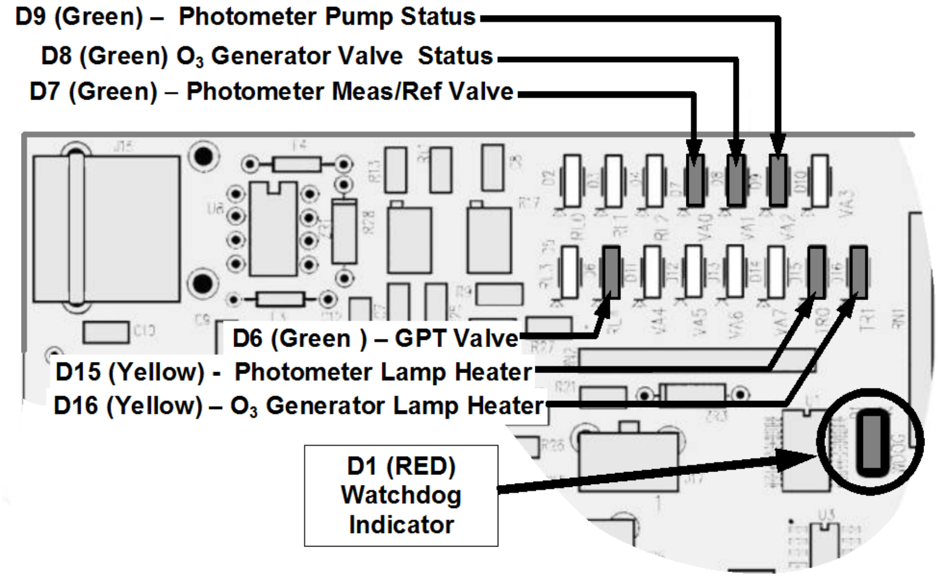
D9 (Green) – Photometer Pump Status
D8 (Green) O$_3$ Generator Valve Status
D7 (Green) – Photometer Meas/Ref Valve
D6 (Green) – GPT Valve
D15 (Yellow) - Photometer Lamp Heater
D16 (Yellow) – O$_3$ Generator Lamp Heater
D1 (RED) Watchdog Indicator

Figure 9-3: Relay PCA Status LEDS Used for Troubleshooting

Table 9-5: Relay PCA Status LED Failure Indications

LED	FUNCTION	SIGNAL I/O PARAMETER		DIAGNOSTIC TECHNIQUE
		ACTIVATED BY	VIEW RESULT	
D7^{1} Green	Photometer Meas/Ref Valve	**PHOTO_REF_VALVE**	N/A	Valve should audibly change states. If not: • Failed Valve • Failed Relay Drive IC on Relay PCA • Failed Relay PCA • Faulty +12 VDC Supply (PS2) • Faulty Connectors/Wiring
D8^{2} Green	O$_3$ Generator Valve Status	**O3_GEN_VALVE**	N/A	
D9^{1} Green	Photometer Pump Status	**O3-PUMP-ON**	N/A	
D6^{1,2} Yellow	GPT Valve Status	**GPT_VALVE**	N/A	
D15^{1} Yellow	Photometer Heater Status	**PHOTO_LAMP_HEATER**	**PHOTO_LAMP_TEMP**	Voltage displayed should change. If not: • Failed Heater • Faulty Temperature Sensor • Failed AC Relay • Faulty Connectors/Wiring
D16^{2} Green	O$_3$ Generator Heater Status	**O3_GEN_HEATER**	**O3_GEN_TEMP**	

[1] Only applies on calibrators with photometer options installed.

[2] Only applies on calibrators with O$_3$ generator options installed.

9.3.3. **VALVE DRIVER PCA STATUS LEDS**

The Signal I/O submenu also includes VARS that can be used to turn the various input gas valves on and off as part of a diagnostic investigation.

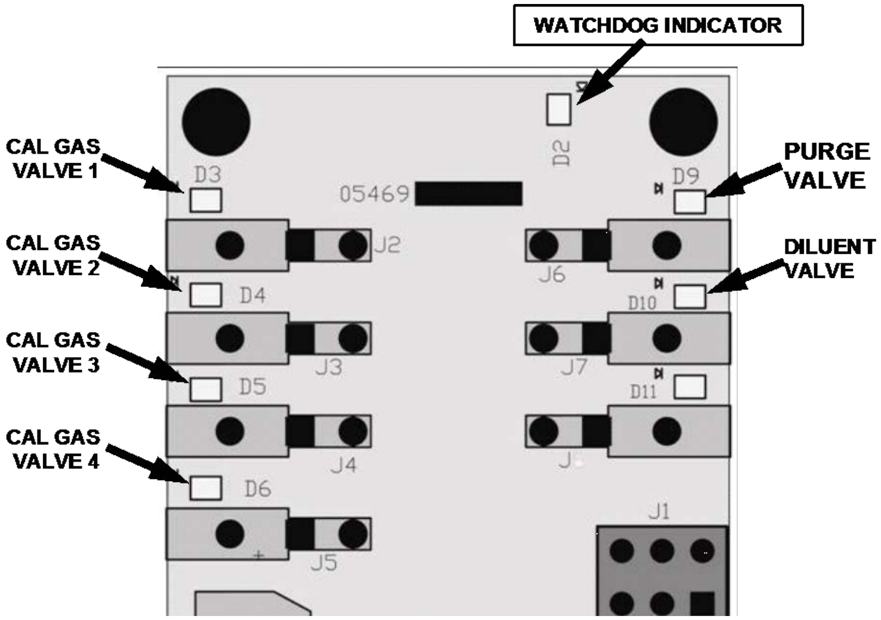
WATCHDOG INDICATOR
D2
CAL GAS VALVE 1
D3
05469
PURGE VALVE
D9
J2
J6
CAL GAS VALVE 2
D4
DILUENT VALVE
D10
CAL GAS VALVE 3
J3
J7
D5
D11
CAL GAS VALVE 4
J4
J
D6
J1
J5

Figure 9-4: Valve Driver PCA Status LEDS Used for Troubleshooting

Table 9-6: Valve Driver Board Watchdog LED Failure Indications

LED	Function	Fault Status	Indicated Failure(s)
D1 (Red)	I²C bus health (Watchdog Circuit)	Continuously ON or Continuously OFF	• Failed/Halted CPU • Faulty motherboard, valve driver board or relay PCA • Faulty connectors/wiring between motherboard, valve driver board or relay PCA • Failed/faulty +5 VDC power supply (PS1)

Table 9-7: Relay PCA Status LED Failure Indications

LED	FUNCTION	ACTIVATED BY SIGNAL I/O PARAMETER	DIAGNOSTIC TECHNIQUE
D3	**Cal Gas CYL1**	**CYL_VALVE_1**	Valve should audibly change states and LED should glow. If not: • Failed valve • Failed valve driver IC on relay PCA • Failed valve driver board • Faulty +12 VDC power supply (PS2) • Faulty connectors/wiring
D4	**Cal Gas CYL2**	**CYL_VALVE_2**	
D5	**Cal Gas CYL3**	**CYL_VALVE_3**	
D6	**Cal Gas CYL4**	**CYL_VALVE_4**	
D9	**Purge Valve Status**	**PURGE_VALVE**	
D10	**Diluent Valve Status**	**INPUT_VALVE**	

9.4. SUBSYSTEM CHECKOUT

The preceding sections of this manual discussed a variety of methods for identifying possible sources of failures or performance problems within the T700 calibrator. In most cases, this included a list of possible components or subsystems that might be the source of the problem. This section describes how to check individual components or subsystems to determine if which is actually the cause of the problem being investigated.

9.4.1. VERIFY SUBSYSTEM CALIBRATION

A good first step when troubleshooting the operation of the T700 calibrator is to verify that its major subsystems are properly calibrated. These are:

- The mass flow controllers (see Section 7.2).
- Test Channel D > A conversion (see Sections 4.10.1.7, 9.4.11.1, and 10.3.5.1).
- Gas pressure calibration (see Section 7.5).

When optional O_3 components are installed, you should also check:

- Photometer calibration (see Section 7.3).
- O3 generator calibration (see Section 7.4).

9.4.2. AC MAIN POWER

The T700 calibrator's electronic systems will operate with any of the specified power regimes. As long as system is connected to 100-120 VAC or 220-240 VAC at either 50 or 60 Hz it will turn on and after about 30 seconds show a front panel display.

- Internally, the status LEDs located on the Relay PCA, motherboard and CPU should turn on as soon as the power is supplied.

- If they do not, check the circuit breaker built into the ON/OFF switch on the instruments front panel.

WARNING

SHOULD THE AC POWER CIRCUIT BREAKER TRIP, INVESTIGATE AND CORRECT THE CONDITION CAUSING THIS SITUATION BEFORE TURNING THE CALIBRATOR BACK ON.

9.4.3. **DC POWER SUPPLY**

If you have determined that the calibrator's AC mains power is working, but the unit is still not operating properly, there may be a problem with one of the instrument's switching power supplies. The supplies can have two faults, namely no DC output, and noisy output.

To assist tracing DC Power Supply problems, the wiring used to connect the various printed circuit assemblies and DC Powered components and the associated test points on the relay PCA follow a standard color-coding scheme as defined in Figure 9-5 and Table 9-8.

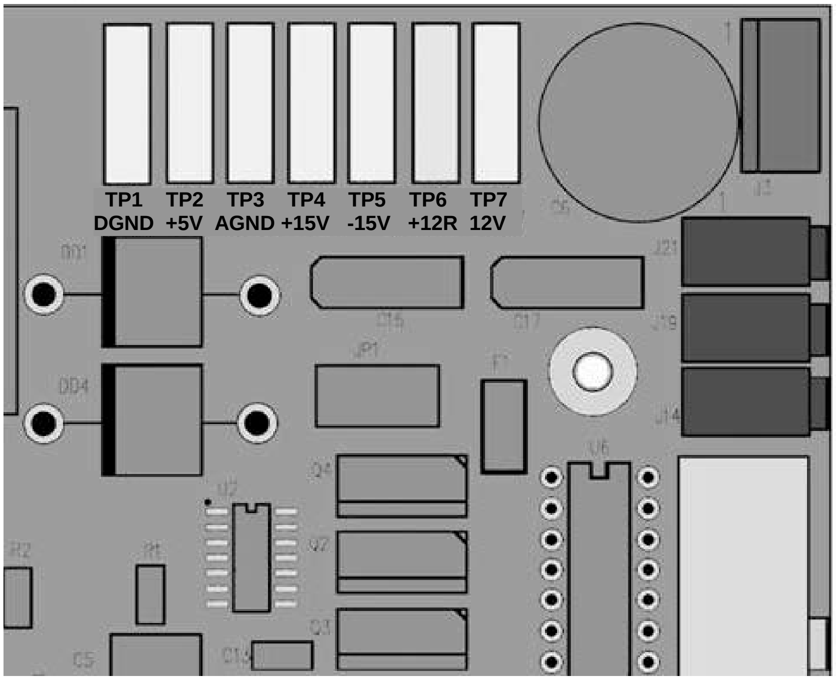

Figure 9-5: Location of DC Power Test Points on Relay PCA

Table 9-8: DC Power Test Point and Wiring Color Codes

NAME	TEST POINT#	TP AND WIRE COLOR
Dgnd	**1**	Black
+5V	**2**	Red
Agnd	**3**	Green
+15V	**4**	Blue
-15V	**5**	Yellow
+12R	**6**	Purple
+12V	**7**	Orange

A voltmeter should be used to verify that the DC voltages are correct per the values in Table 9-9, and an oscilloscope, in AC mode, with band limiting turned on, can be used to evaluate if the supplies are producing excessive noise (> 100 mV p-p).

Table 9-9: DC Power Supply Acceptable Levels

POWER SUPPLY ASSY	VOLTAGE	CHECK RELAY PCA TEST POINTS				MIN V	MAX V
		FROM TEST POINT		TO TEST POINT			
		NAME	#	NAME	#		
PS1	+5	Dgnd	1	+5	2	4.8	5.25
PS1	+15	Agnd	3	+15	4	13.5	16V
PS1	-15	Agnd	3	-15V	5	-14V	-16V
PS1	Agnd	Agnd	3	Dgnd	1	-0.05	0.05
PS1	Chassis	Dgnd	1	Chassis	N/A	-0.05	0.05
PS2	+12	+12V Ret	6	+12V	7	11.75	12.5
PS2	Dgnd	+12V Ret	6	Dgnd	1	-0.05	0.05

9.4.4. **I^2C BUS**

Operation of the I^2C bus can be verified by observing the behavior of D1 on the relay PCA & D2 on the Valve Driver PCA. Assuming that the DC power supplies are operating properly, the I^2C bus is operating properly if D1 on the relay PCA and D2 of the Valve Driver PCA are flashing

There is a problem with the I^2C bus if both D1 on the relay PCA and D2 of the Valve Driver PCA are ON/OFF constantly.

9.4.5. **TOUCHSCREEN INTERFACE**

Verify the functioning of the touch screen by observing the display when pressing a touch-screen control button. Assuming that there are no wiring problems and that the DC power supplies are operating properly, but pressing a control button on the touch screen does not change the display, any of the following may be the problem:

- The touch-screen controller may be malfunctioning.
- The internal USB bus may be malfunctioning.

You can verify this failure by logging on to the instrument using APICOM or a terminal program. If the analyzer responds to remote commands and the display changes accordingly, the touch-screen interface may be faulty.

9.4.6. **LCD DISPLAY MODULE**

Verify the functioning of the front panel display by observing it when power is applied to the instrument. Assuming that there are no wiring problems and that the DC power supplies are operating properly, the display screen should light and show the splash screen and other indications of its state as the CPU goes through its initialization process.

9.4.7. RELAY PCA

The Relay PCA can be most easily checked by observing the condition of the status LEDs on the Relay PCA (see Section 9.3.2), and using the **SIGNAL I/O** submenu under the **DIAG** menu (see Section 4.10) to toggle each LED **ON** or **OFF.**

If D1 on the Relay PCA is flashing and the status indicator for the output in question (Heater power, Valve Drive, etc.) toggles properly using the Signal I/O function, then the associated control device on the Relay PCA is bad. Several of the control devices are in sockets and can be easily replaced. Table 9-10 lists the control device associated with a particular function.

Table 9-10: Relay PCA Control Devices

FUNCTION	CONTROL DEVICE	IN SOCKET
UV Lamp Heater	Q2	No
O_3 Gen Heater	Q3	No
All Valves	U5	Yes

9.4.8. VALVE DRIVER PCA

Like the Relay PCA the valve driver PCA is checked by observing the condition of the its status LEDs on the Relay Board (see Section 9.3.2), and using the **SIGNAL I/O** submenu under the **DIAG** menu (see Section 9.1.3) to toggle each LED **ON** or **OFF.**

If D2 on the valve driver board is flashing and the status indicator for the output in question (Gas Cyl 1, Purge Valve, etc.) toggles properly using the Signal I/O function, then the control IC is bad.

9.4.9. INPUT GAS PRESSURE / FLOW SENSOR ASSEMBLY

The input gas pressure/flow sensor PCA, located at the front of the instrument to the left of the MFCs (see Figure 3-6) can be checked with a Voltmeter. The following procedure assumes that the wiring is intact and that the motherboard as well as the power supplies is operating properly:

BASIC PCA OPERATION:

- Measure the voltage across C1 it should be 5 VDC ± 0.25 VDC. If not, then the board is bad

CAL GAS PRESSURE SENSOR:

1. Measure the pressure on the inlet side of S1 with an external pressure meter.

2. Measure the voltage across TP4 and TP1.

- The expected value for this signal should be:

$$\text{Expected mVDC} = \left(\frac{\text{Pressure}}{34.18_{\text{psig}}} \times 4250_{\text{mvDC}} \right) + 750_{\text{mvDC}} \qquad \pm 10\%_{\text{rdg}}$$

EXAMPLE: If the measured pressure is 25 PSIG, the expected voltage level between TP4 and TP1 would be between 3470 mVDC and 4245 mVDC.

EXAMPLE: If the measured pressure is 30 PSIG, the expected voltage level between TP4 and TP1 would be between 4030 mVDC and 4930 mVDC.

- If this voltage is out of range, then either pressure transducer S1 is bad, the board is bad, or there is a pneumatic failure preventing the pressure transducer from sensing the absorption cell pressure properly.

DILUENT PRESSURE SENSOR:

1. Measure the pressure on the inlet side of S2 with an external pressure meter.
2. Measure the voltage across TP5 and TP1.
3. Evaluate the reading in the same manner as for the cal gas pressure sensor.

9.4.10. PHOTOMETER O3 GENERATOR PRESSURE/FLOW SENSOR ASSEMBLY

This assembly is only present in calibrators with O_3 generator and/or photometer options installed. The pressure/flow sensor PCA, located at the rear of the instrument between the O_3 generator and the photometer pump (see Figure 3-6) can be checked with a Voltmeter. The following procedure assumes that the wiring is intact and that the motherboard as well as the power supplies are operating properly:

BASIC PCA OPERATION

- Measure the voltage across C1 it should be 5 VDC ± 0.25 VDC. If not, then the board is bad.
- Measure the voltage between TP2 and TP1 C1. It should be 1o VDC ± 0.25 VDC. If not then the board is bad.

PHOTOMETER PRESSURE SENSOR

1. Measure the pressure on the inlet side of S1 with an external pressure meter.
2. Measure the voltage across TP4 and TP1.
   - The expected value for this signal should be:

$$\text{Expected mVDC} = \left(\frac{\text{Pressure}}{30.0_{\text{In-Hg-A}}} \times 4660_{\text{mvDC}}\right) + 250_{\text{mvDC}} \qquad \pm\ 10\%_{\text{rdg}}$$

EXAMPLE: If the measured pressure is 20 In-Hg-A, the expected voltage level between TP4 and TP1 would be between 2870 mVDC and 3510 mVDC.

EXAMPLE: If the measured pressure is 25 In-Hg-A, the expected voltage level between TP4 and TP1 would be between 3533 mVDC and 4318 mVDC.

- If this voltage is out of range, then either pressure transducer S1 is bad, the board is bad or there is a pneumatic failure preventing the pressure transducer from sensing the absorption cell pressure properly.

O_3 GENERATOR PRESSURE SENSOR

1. Measure the pressure on the inlet side of S2 with an external pressure meter.

2. Measure the voltage across TP5 and TP1.
   - Evaluate the reading in the same manner as for the cal gas pressure sensor (see Section 9.4.9).

PHOTOMETER FLOW SENSOR

- Measure the voltage across TP3 and TP1.
  - With proper flow (800 cm3/min through the photometer), this should be approximately 4.5V (this voltage will vary with altitude).
  - With flow stopped (photometer inlet disconnected or pump turned OFF) the voltage should be approximately 1V.
  - If the voltage is incorrect, the flow sensor S3 is bad, the board is bad or there is a leak upstream of the sensor.

9.4.11. MOTHERBOARD

9.4.11.1. A/D Functions

The simplest method to check the operation of the A-to-D converter on the motherboard is to use the Signal I/O function under the DIAG menu to check the two A/D reference voltages and input signals that can be easily measured with a voltmeter.

1. Use the Signal I/O function (See Section 9.1.3 and Appendix A) to view the value of REF_4096_MV and REF_GND. If both are within 3 mV of nominal (4096 and 0), and are stable, ±0.5 mV then the basic A/D is functioning properly. If not then the motherboard is bad.
2. Choose a parameter in the Signal I/O function such as Dil_PRess, MFC_FLOW_1 or SAMPLE_FLOW.
    - Compare these voltages at their origin (see the interconnect drawing and interconnect list in Appendix D) with the voltage displayed through the signal I/O function.
    - If the wiring is intact but there is a large difference between the measured and displayed voltage (±10 mV) then the motherboard is bad.

9.4.11.2. Test Channel / Analog Outputs Voltage

To verify that the analog output is working properly, connect a voltmeter to the output in question and perform an analog output step test as follows:

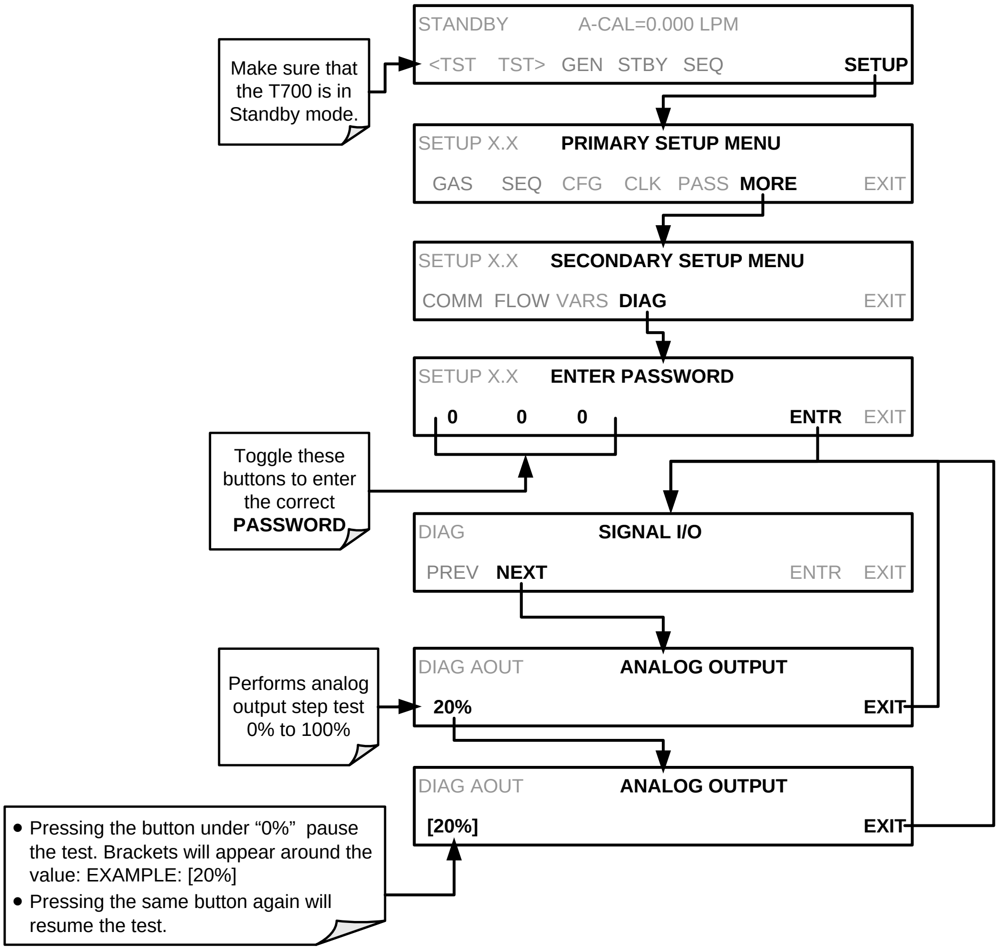
STANDBY A-CAL=0.000 LPM
<TST TST> GEN STBY SEQ SETUP
SETUP X.X PRIMARY SETUP MENU
GAS SEQ CFG CLK PASS MORE EXIT
SETUP X.X SECONDARY SETUP MENU
COMM FLOW VARS DIAG EXIT
SETUP X.X ENTER PASSWORD
0 0 0 ENTR EXIT
DIAG SIGNAL I/O
PREV NEXT ENTR EXIT
DIAG AOUT ANALOG OUTPUT
20% EXIT
DIAG AOUT ANALOG OUTPUT
[20%] EXIT

Make sure that the T700 is in Standby mode.

Toggle these buttons to enter the correct **PASSWORD**

Performs analog output step test 0% to 100%

- Pressing the button under “0%” pause the test. Brackets will appear around the value: EXAMPLE: [20%]
- Pressing the same button again will resume the test.

For each of the steps the output should be within 1% of the nominal value listed in the table below except for the 0% step, which should be within 0mV ±2 to 3 mV. Ensure you take into account any offset that may have been programmed into channel (See Section 4.10.1.5).

Table 9-11: Analog Output Test Function – Nominal Values Voltage Outputs

		FULL SCALE OUTPUT OF VOLTAGE RANGE (see Section 4.10.1.3)			
		100MV	1V	5V	10V
STEP	%	NOMINAL OUTPUT VOLTAGE			
1	0	0	0	0	0
2	20	20 mV	0.2	1	2
3	40	40 mV	0.4	2	4
4	60	60 mV	0.6	3	6
5	80	80 mV	0.8	4	8
6	100	100 mV	1.0	5	10

If one or more of the steps fails to be within these ranges, it is likely that there has been a failure of the either or both of the DACs and their associated circuitry on the motherboard.

9.4.11.3. **Status Outputs**

To test the status output electronics:

1. Connect a jumper between the “D“ pin and the “▽” pin on the status output connector.
2. Connect a 1000 ohm resistor between the “+” pin and the pin for the status output that is being tested.
3. Connect a voltmeter between the “▽” pin and the pin of the output being tested (see table below).
4. Under the DIAG> Signal I/O menu (See Section9.1.3), scroll through the inputs and outputs until you get to the output in question.
5. Alternatively, turn on and off the output noting the voltage on the voltmeter.
   - It should vary between 0 volts for ON and 5 volts for OFF.

Table 9-12: Status Outputs Check

PIN (LEFT TO RIGHT)	STATUS
1	ST_SYSTEM_OK
2	SPARE
3	ST_CAL_ACTIVE
4	ST_DIAG_MODE
5	ST_TEMP_ALARM
6	ST_PRESS_ALARM
7	PERM_VALVE_1
8	PERM_VALVE_2

9.4.11.4. **Control Inputs**

Table 9-13: T700 Control Input Pin Assignments and Corresponding Signal I/O Functions

CONNECTOR	INPUT	CORRESPONDING I/O SIGNAL
Top	A	CONTROL_IN_1
Top	B	CONTROL_IN_2
Top	C	CONTROL_IN_3
Top	D	CONTROL_IN_4
Top	E	CONTROL_IN_5
Top	F	CONTROL_IN_6
Bottom	G	CONTROL_IN_7
Bottom	H	CONTROL_IN_8
Bottom	I	CONTROL_IN_9
Bottom	J	CONTROL_IN_10
Bottom	K	CONTROL_IN_11
Bottom	L	CONTROL_IN_12

The control input bits can be tested by applying a trigger voltage to an input and watching changes in the status of the associated function under the SIGNAL I/O submenu:

EXAMPLE: to test the “**A**” control input:

1. Under the DIAG> Signal I/O menu (See Section 9.1.3), scroll through the inputs and outputs until you get to the output named 0) CONTROL_IN_1.
2. Connect a jumper from the “+” pin on the appropriate connector to the “U” on the same connector.
3. Connect a second jumper from the “▽” pin on the connector to the “A” pin.
4. The status of 0) CONTROL_IN_1 should change to read “ON”.

9.4.11.5. **Control Outputs**

To test the Control Output electronics:

1. Connect a jumper between the “E“ pin and the “▽” pin on the status output connector.
2. Connect a 1000 ohm resistor between the “+” pin and the pin for the status output that is being tested.
3. Connect a voltmeter between the “▽” pin and the pin of the output being tested (see Table 9-14).
4. Under the DIAG> Signal I/O menu (See Section 9.1.3), scroll through the inputs and outputs until you get to the output in question.
5. Alternately, turn on and off the output noting the voltage on the voltmeter.
    - It should vary between 0 volts for ON and 5 volts for OFF.

Table 9-14: Control Outputs Pin Assignments and Corresponding Signal I/O Functions Check

PIN (LEFT TO RIGHT)	STATUS
1	**CONTROL_OUT_1**
2	**CONTROL_OUT_2**
3	**CONTROL_OUT_3**
4	**CONTROL_OUT_4**
5	**CONTROL_OUT_5**
6	**CONTROL_OUT_6**
7	**CONTROL_OUT_7**
8	**CONTROL_OUT_8**
9	**CONTROL_OUT_9**
10	**CONTROL_OUT_10**
11	**CONTROL_OUT_11**
12	**CONTROL_OUT_12**

9.4.12. CPU

There are two major types of CPU board failures, a complete failure and a failure associated with the Disk On Module (DOM). If either of these failures occurs, contact the factory.

For complete failures, assuming that the power supplies are operating properly and the wiring is intact, the CPU is faulty if on power-on, the watchdog LED on the motherboard is not flashing.

In some rare circumstances, this failure may be caused by a bad IC on the motherboard, specifically U57, the large, 44 pin device on the lower right hand side of the board. If this is true, removing U57 from its socket will allow the instrument to start up but the measurements will be invalid.

If the analyzer stops during initialization (the front panel display shows a fault or warning message), it is likely that the DOM, the firmware or the configuration and data files have been corrupted.

9.4.13. THE CALIBRATOR DOESN’T APPEAR ON THE LAN OR INTERNET

Most problems related to Internet communications via the Ethernet card will be due to problems external to the calibrator (e.g. bad network wiring or connections, failed routers, malfunctioning servers, etc.) However, there are several symptoms that indicate the problem may be with the Ethernet card itself.

If neither of the Ethernet cable’s two status LED’s (located on the back of the cable connector) is lit while the instrument is connected to a network:

- Verify that the instrument is being connected to an active network jack.
- Check the internal cable connection between the Ethernet card and the CPU board.

9.4.14. **RS-232 COMMUNICATIONS**

9.4.14.1. **General RS-232 Troubleshooting**

Teledyne API calibrators use the RS-232 communications protocol to allow the instrument to be connected to a variety of computer-based equipment. RS-232 has been used for many years and as equipment has become more advanced, connections between various types of hardware have become increasingly difficult. Generally, every manufacturer observes the signal and timing requirements of the protocol very carefully.

Problems with RS-232 connections usually center around 4 general areas:

- Incorrect cabling and connectors. See Section 3.3.1.7 for connector and pin-out information.
- The BAUD rate and protocol are incorrectly configured. See Section 5.2.
- If a modem is being used, additional configuration and wiring rules must be observed. See Section 6.3.
- Incorrect setting of the DTE-DCE Switch is set correctly. See Section 5.1.
- Verify that the cable (P/N 03596) that connects the serial COMM ports of the CPU to J12 of the motherboard is properly seated.

9.4.14.2. **Troubleshooting Calibrator/Modem or Terminal Operation**

These are the general steps for troubleshooting problems with a modem connected to a Teledyne API calibrator.

1. Check cables for proper connection to the modem, terminal or computer.
2. Check to ensure the DTE-DCE is in the correct position as described in Section 5.1.
3. Check to ensure the set up command is correct. See Section 6.2.
4. Verify that the Ready to Send (RTS) signal is at logic high. The T700 sets pin 7 (RTS) to greater than 3 volts to enable modem transmission.
5. Ensure the BAUD rate, word length, and stop bit settings between modem and calibrator match. See Section 5.2.1.
6. Use the RS-232 test function to send “w” characters to the modem, terminal or computer. See Section 5.2.3.
7. Get your terminal, modem or computer to transmit data to the calibrator (holding down the space bar is one way); the green LED should flicker as the instrument is receiving data.
8. Ensure that the communications software or terminal emulation software is functioning properly.

Note **Further help with serial communications is available in a separate manual “RS-232 Programming Notes” Teledyne API’s P/N 013500000.**

9.4.15. TEMPERATURE PROBLEMS

Individual control loops are used to maintain the set point of the Photometer UV Lamp (optional), and the Ozone Generator Lamp (optional). If any of these temperatures are out of range or are poorly controlled, the T700 will perform poorly.

9.4.15.1. Box / Chassis Temperature

The box temperature sensor is mounted to the motherboard and cannot be disconnected to check its resistance. Rather check the **BOX TEMP** signal using the **SIGNAL I/O** function under the **DIAG** Menu (see Section 9.1.3). This parameter will vary with ambient temperature, but at ~30°C (6-7° above room temperature) the signal should be ~1450 mV.

9.4.15.2. Photometer Sample Chamber Temperature

The temperature of the gas in the photometer sample chamber should read approximately 5.0°C higher than the box temperature.

9.4.15.3. UV Lamp Temperature

There are three possible causes for the UV Lamp temperature to have failed.

- The UV Lamp heater has failed. Check the resistance between pins 5 and 6 on the six-pin connector adjacent to the UV Lamp on the Optical Bench.
    - It should be approximately 30 Ohms.
- Assuming that the I^{2}C bus is working and that there is no other failure with the Relay board, the FET Driver on the Relay Board may have failed.
    - Using the PHOTO_LAMP HEATER parameter under the Signal I/O function of the Diag menu, as described above, turn on and off the UV Lamp Heater (D15 on the relay board should illuminate as the heater is turned on).
    - Check the DC voltage present between pin 1 and 2 on J13 of the Relay Board.
    - If the FET Driver has failed, there will be no change in the voltage across pins 1 and 2.
- If the FET Driver Q2 checks out OK, the thermistor temperature sensor in the lamp assembly may have failed.
    - Unplug the connector to the UV Lamp Heater/Thermistor PCB, and measure the resistance of the thermistor between pins 5 and 6 of the 6-pin connector.
    - The resistance near the 58oC set point is ~8.1k ohms.

9.4.15.4. **Ozone Generator Temperature**

There are three possible causes for the Ozone Generator temperature to have failed.

- The O_3 Gen heater has failed. Check the resistance between pins 5 and 6 on the six-pin connector adjacent to the UV Lamp on the O_3 Generator. It should be approximately 5 Ohms.
- Assuming that the I^2C bus is working and that there is no other failure with the Relay board, the FET Driver on the Relay Board may have failed. Using the **O3_GEN_HEATER** parameter under the **SIGNAL I/O** submenu of the **DIAG** menu as described above, turn the UV Lamp Heater on and off. Check the DC voltage present between pin 1 and 2 on J14 of the Relay Board.

  If the FET Driver has failed, there should be no change in the voltage across pins 1 and 2.
- If the FET Driver checks out OK, the thermistor temperature sensor in the lamp assembly may have failed. Unplug the connector to the Ozone Generator Heater/Thermistor PCB, and measure the resistance of the thermistor between pins 5 and 6 of the 6-pin connector.

9.5. TROUBLESHOOTING THE OPTIONAL O_3 PHOTOMETER

9.5.1. DYNAMIC PROBLEMS WITH THE OPTIONAL O3 PHOTOMETER

Dynamic problems are problems that only manifest themselves when the photometer is measuring O_3 concentration gas mixtures. These can be the most difficult and time consuming to isolate and resolve.

Since many photometer behaviors that appear to be a dynamic in nature are often a symptom of a seemingly unrelated static problems, it is recommended that dynamic problems not be addressed until all static problems, warning conditions and subsystems have been checked and any problems found are resolved.

Once this has been accomplished, the following most common dynamic problems should be checked.

9.5.1.1. **Noisy or Unstable O_3 Readings at Zero**

- Check for leaks in the pneumatic system as described in Section 8.2.1.
- Confirm that the Zero gas is free of Ozone.
- Confirm that the Source Lamp is fully inserted and that the lamp hold-down thumb-screw is tight.
- Check for a dirty Absorption Cell and/or pneumatic lines. Clean as necessary as described in Section 8.2.2.
- Disconnect the exhaust line from the optical bench (the pneumatic line at the lamp end of the bench) and plug the port in the bench. If readings remain noisy, the problem is in one of the electronic sections of the instrument. If readings become quiet, the problem is in the instrument's pneumatics.

9.5.1.2. **Noisy, Unstable, or Non-Linear Span O_3 Readings**

- Check for leaks in the pneumatic systems as described in Section 8.2.1.
- Check for proper operation of the meas/ref switching valve as described in Section 9.5.2.
- Check for dirty absorption cell and clean or replace as necessary as described in Section 8.2.2.
- Check for operation of the A/D circuitry on the motherboard. See Section 9.4.11.1.
- Confirm the Sample Temperature, Sample Pressure and Sample Flow readings are correct. Check and adjust as required.

9.5.1.3. **Slow Response to Changes in Concentration**

- Check for dirty absorption cell and clean or replace as necessary as described in Section 8.2.2.
- Check for pneumatic leaks as described in Section 8.2.1.
- The photometer needs 800 cm^3/min of gas flow. Ensure that this is accounted for when calculating total required output flow for the calibrator (see Section 3.4.9).

9.5.1.4. **The Analog Output Signal Level Does Not Agree With Front Panel Readings**

- Confirm that the recorder offset (see Section 4.10.1.5) is set to zero.
- Perform an AIO calibration (see Section 4.10.1.6) and photometer dark calibration (see Section 7.3.5).

9.5.1.5. **Cannot Zero**

- Check for leaks in the pneumatic system as described in Section 8.2.1.
- Confirm that the Zero gas is free of Ozone.
- The photometer needs 800 cm^3/min of gas flow. Ensure that this is accounted for when calculating total required output flow for the calibrator (see Section 3.4.9).

9.5.1.6. **Cannot Span**

- Check for leaks in the pneumatic systems as described in Section 8.2.1.
- Check for proper operation of the meas/ref switching valve as described in Section9.5.2.
- Check for dirty absorption cell and clean or replace as necessary as described in Section 8.2.2.
- Check for operation of the A/D circuitry on the motherboard. See Section 9.4.11.1.
- Confirm the Sample Temperature, Sample Pressure and Sample Flow readings are correct. Check and adjust as required.
- The photometer needs 800 cm^3/min of gas flow. Ensure that this is accounted for when calculating total required output flow for the calibrator (see Section 3.4.9).

9.5.2. CHECKING MEASURE / REFERENCE VALVE

1. To check the function of the photometer's measure / reference valve:
2. Set the calibrator's front panel display to show the PHOTO REFERENCE test function (see Section 4.1.1).
3. Follow the instruction in Sections 7.3.3 and 7.3.4.1 for performing a zero point calibration of the photometer.
    - Press XZRO and allow the calibrator to stabilize.
4. Before completing the calibration by pressing the ZERO button, note of the displayed value.
5. Press the final Zero button then press “NO” when asked, “ARE YOU SURE”.
6. Follow the instruction in Sections 7.3.4.2 for performing a span point calibration of the photometer.
    - Press XSPN and allow the calibrator to stabilize.
7. Before completing the calibration by pressing the SPAN button, note of the displayed value of PHOTO REFERENCE.
    - If the O3 REF value has decreased by more than 2 mV from its value with Zero-gas, then there is a "cross-port" leak in the M/R valve.
8. Press the final Zero button then press “NO” when asked, “ARE YOU SURE”.

9.5.3. CHECKING THE UV LAMP POWER SUPPLY

Note **A schematic and physical diagram of the Lamp Power Supply can be found in Appendix D.**

WARNING

Hazardous voltage present - use caution.

It is not always possible to determine with certainty whether a problem is the result of the UV Lamp or the Lamp Power Supply. However, the following steps will provide a reasonable confidence test of the Lamp Power Supply.

1. Unplug the cable connector at P1 on the Lamp Power Supply and confirm that +15VDC is present between Pins 1 and 2 on the cable connector.
2. If this voltage is incorrect, check the DC test points on the relay PCA as described in Section 9.4.3.
3. Remove the cover of the photometer and check for the presence of the following voltages on the UV lamp power supply PCA (see Figure 10-20):
    - +4500 mVDC ±10 mVDC between TP1 and TP4 (grnd)
    - If this voltage is incorrect, either the UV lamp power supply PCA is faulty or the I2C bus is not communicating with the UV lamp power supply PCA.
    - +5VDC between TP3 and TP4 (grnd)
    - If this voltages is less than 4.8 or greater than 5.25 either the 5 VDC power supply or the UV lamp power supply PCA are faulty.
    - If the above voltages check out, it is more likely that a problem is due to the UV Lamp than due to the Lamp Power Supply.
    - Replace the Lamp and if the problem persists, replace the Lamp Power Supply.

9.6. TROUBLESHOOTING THE OPTIONAL O_3 GENERATOR

The only significant components of the O_3 generator that might reasonable malfunction is the power supply assembly for the UV source lamp and the lamp itself.

9.6.1. CHECKING THE UV SOURCE LAMP POWER SUPPLY

Note **Appendix D includes a schematic of the Lamp Power Supply.**

WARNING

Hazardous voltage present - use caution.

It is not always possible to determine with certainty whether a problem is the result of the UV Lamp or the Lamp Power Supply, however, the following steps will provide a reasonable confidence test of the Lamp Power Supply.

1. Ensure that the calibrator is in STANDBY mode.
2. Unplug the cable connector at P1 on the Lamp Power Supply and confirm that +15VDC is present between Pins 1 and 2 on the cable connector.
3. If this voltage is incorrect, check the DC test points on the relay PCA as described in Section 9.4.3.
4. Remove the cover of the photometer and check for the presence of the following voltages on the UV lamp power supply PCA (see Figure 10-20):
    - +800 mVDC ±10 mVDC between TP1 and TP4 (grnd)
    - If this voltage is incorrect, either the UV lamp power supply PCA is faulty or the I2C bus is not communicating with the UV lamp power supply PCA.
    - +5VDC between TP3 and TP4 (grnd)
    - If this voltages is less than 4.8 or greater than 5.25 either the 5 VDC power supply or the UV lamp power supply PCA are faulty.
    - If the above voltages check out, it is more likely that a problem is due to the UV Lamp than due to the Lamp Power Supply.
    - Replace the Lamp and if the problem persists, replace the Lamp Power Supply.

9.7. SERVICE PROCEDURES

9.7.1. DISK-ON-MODULE REPLACEMENT PROCEDURE

Replacing the Disk-on-Module (DOM) will cause loss of all DAS data; it may also cause some of the instrument configuration parameters to be lost unless the replacement DOM carries the exact same firmware version. Whenever changing the version of installed software, the memory must be reset. Failure to ensure that memory is reset can cause the analyzer to malfunction, and invalidate measurements. After the memory is reset, the A/D converter must be re-calibrated, and all information collected in Step 1 below must be re-entered before the instrument will function correctly. Also, zero and span calibration should be performed.

1. Document all analyzer parameters that may have been changed, such as range, auto-cal, analog output, serial port and other settings before replacing the DOM
2. Turn off power to the instrument, fold down the rear panel by loosening the mounting screws.
3. When looking at the electronic circuits from the back of the analyzer, locate the Disk-on-Module in the right-most socket of the CPU board.
4. The DOM should carry a label with firmware revision, date and initials of the programmer.
5. Remove the nylon standoff clip that mounts the DOM over the CPU board, and lift the DOM off the CPU. Do not bend the connector pins.
6. Install the new Disk-on-Module, making sure the notch at the end of the chip matches the notch in the socket.
7. It may be necessary to straighten the pins somewhat to fit them into the socket. Press the DOM all the way in and reinsert the offset clip.
8. Close the rear panel and turn on power to the machine.
9. If the replacement DOM carries a firmware revision, re-enter all of the setup information.

9.8. TECHNICAL ASSISTANCE

If this manual and its service & repair section do not solve your problems, technical assistance may be obtained from:

TELEDYNE API TECHNICAL SUPPORT
9970 CARROLL CANYON ROAD
SAN DIEGO, CALIFORNIA 92131-1106
USA

Toll-free Phone:	**800-324-5190**
Phone:	**+1 858-657-9800**
Fax:	**+1 858-657-9816**
Email:	**sda_techsupport@teledyne.com**
Website:	**http://www.teledyne-api.com/**

Before you contact Technical Support, fill out the problem report form in Appendix C, which is also available online for electronic submission at http://www.teledyne-api.com/forms/.

9.9. FREQUENTLY ASKED QUESTIONS (FAQs)

The following list of FAQs is from the Teledyne API's Technical Support Department's most commonly asked questions relating to the T700 Dynamic Dilution Calibrator.

Question	**Answer**
My ozone ACT =XXXX why?	Look at the Photo Ref/Meas. These are most likely too low and need to be adjusted up to 4500mV. Another possible cause would be no gas flow to the photometer causing the O_3 reading to be out of range - low
When I generate ozone, it takes a long time to settle out or it fluctuates around the number until finally stabilizing.	Perform an O_3 Gen Adjust (Section 8.2.5), and then an O_3 Gen Calibration (Section 7.4). Re-run points.
Why does the **ENTR** button sometimes disappear on the front panel display?	Once you adjust the setting to an allowable value, the **ENTR** button will re-appear.
How do I make the RS-232 Interface Work?	See Sections 3.3.1.7, 5, and 9.4.14
When should I change the sintered filter(s) in the calibrator's critical flow orifice(s) and how do I change them?	The sintered filters do not require regular replacement. Should one require replacement as part of a troubleshooting or repair exercise, contact Technical Support.
How often should I rebuild the photometer pump on my calibrator?	It does not require rebuilding; the entire pump should be replaced every two years.
How long do the UV lamps of the optional O_3 generator and photometer last?	The typical lifetime is about 2-3 years.

This page intentionally left blank.

10. PRINCIPLES OF OPERATION

10.1. BASIC PRINCIPLES OF DYNAMIC DILUTION CALIBRATION

The T700 Dynamic Dilution Calibrator generates calibration gas mixtures by mixing bottled source gases of known concentrations with a diluent gas (zero air). Using several Mass Flow Controllers (MFCs) the T700 calibrator creates exact ratios of diluent and source gas by controlling the relative rates of flow of the various gases, under conditions where the temperature and pressure of the gases being mixed is known (and therefore the density of the gases).

The CPU calculates both the required source gas and diluent gas flow rates and controls the corresponding mass flow controllers by the following equation.

Equation 10-1

$$C_f = C_i \times \frac{GAS_{flow}}{Totalflow}$$

WHERE:

C_f = final concentration of diluted gas

C_i = source gas concentration

GAS_{flow} = source gas flow rate

$Totalflow$ = the total gas flow through the calibrator

Totalflow is determined as:

Equation 10-2a

$$\mathbf{TOTALFLOW} = GAS_{flow} + Diluent_{flow}$$

WHERE:

GAS_{flow} = source gas flow rate

$Diluent_{flow}$ = zero air flow rate

For instrument with multiple source gas MFC total Flow is:

Equation 10-2b

$$\mathbf{TOTALFLOW} = GAS_{flow\ MFC1} + GAS_{flow\ MFC2} \ldots + GAS_{flow\ MFCn} + Diluent_{flow\ rate}$$

This dilution process is dynamic. The T700's CPU not only keeps track of the temperature and pressure of the various gases, but also receives data on actual flow rates of the various MFCs in real time so the flow rate control can be constantly adjusted to maintain a stable output concentration.

The T700 calibrator's level of control is so precise that bottles of mixed gases can be used as source gas. Once the exact concentrations of all of the gases in the bottle are programmed into the T700, it will create an exact output concentration of any of the gases in the bottle.

10.1.1. GAS PHASE TITRATION MIXTURES FOR O_3 AND NO_2

Because ozone is a very reactive and therefore under normal ambient conditions a short-lived gas, it cannot be reliably bottled, however, an optional O_3 generator can be included in the T700 calibrator that allows the instrument to be use to create calibration mixtures that include O_3.

This ability to generate O_3 internally also allows the T700 Dynamic Dilution Calibrator to be used to create calibration mixture containing NO_2 using a gas phase titration process (GPT) by precisely mixing bottled NO of a known concentration with O_3 of a known n concentration and diluent gas (zero air).

The principle of GPT is based on the rapid gas phase reaction between NO and O_3 that produces quantities of NO_2 as according to the following equation:

Equation 10-3

$$NO + O_3 \longrightarrow NO_2 + O_2 + h\nu_{(light)}$$

Under controlled circumstances, the NO-O_3 reaction is very efficient (<1% residual O_3), therefore the concentration of NO_2 resulting from the mixing of NO and O_3 can be accurately predicted and controlled as long as the following conditions are met:

- The amount of O_3 used in the mixture is known.
- The amount of NO used in the mixture is **AT LEAST** 10% greater than the amount O_3 in the mixture.
- The volume of the mixing chamber is known.
- The NO and O_3 flow rates (from which the time the two gases are in the mixing chamber) are low enough to give a residence time of the reactants in the mixing chamber of >2.75 ppm min.

Given the above conditions, the amount of NO_2 being output by the T700 will be equal to (at a 1:1 ratio) the amount of O_3 added.

Since:

- The O_3 flow rate of the T700's O_3 generator is a fixed value (typically about 0.105 LPM);
- The GPT chamber's volume is known,
- The source concentration of NO is a fixed value,

Once the **TOTALFLOW** is determined and entered into the T700's memory and target concentration for the O_3 generator are entered into the calibrator's software, the T700 adjusts the NO flow rate and diluent (zero air) flow rate to precisely create the appropriate NO_2 concentration at the output.

In this case, ***Totalflow*** is calculated as:

Equation 10-4

$$DIL_{flow} = Totalflow - NO\,GAS_{flow} - O_{3\,flow}$$

WHERE:

$NOGAS_{flow}$ = NO source gas flow rate (For calibrator's with multiple source gas MFC, $NOGAS_{flow}$ is the sum of the flow rate for all of the active cal gas MFCs)

Totalflow = total gas flow requirements of the system.

$O_{3\,flow}$ = the flow rate set for the O_3 generator.

DIL_{flow} = required diluent gas flow

Again, this is a dynamic process. An optional photometer can be added the T700 calibrator that allows the CPU to tracks the chemiluminescent reaction created when the NO and O_3 interact to measure the decrease in NO concentration as NO_2 is produced. This information, along with the other data (gas temperature and pressure, actual flow rates, etc.) is used by the CPU to establish a very accurate NO_2 calibration mixture.

10.2. PNEUMATIC OPERATION

The T700 calibrator pneumatic system consists of the precision dilution system and valve manifold consisting of four gas port valves and one diluent air valve. When bottles of source gas containing different, gases are connected to the four source-gas inlet-ports, these valves are used to select the gas type to be used by opening and closing off gas flow from the various bottles upstream of the MFCs.

IMPORTANT

IMPACT ON READINGS OR DATA

Exceeding 35 PSI may cause leakage that could cause unwanted gases to be included in the calibration mixture. Each valve is rated for up to 40 PSI zero air pressure and the source gas pressure should be between 25 to 30 PSI and never more than 35 PSI.

By closing all of the four source gas input valves so that only zero air is allowed into the calibrator, the entire pneumatic system can be purges with zero air without having to manipulate the MFCs.

For an instrument in which the O_3 generator and GPT pneumatics are installed, a glass volume, carefully selected per the U.S. E.P.A. guidelines is used to optimize NO_2 creation.

See Figure 3-25 and Section 3.3.2 for descriptions of the internal pneumatics for the T700 calibrator.

10.2.1. **GAS FLOW CONTROL**

The precision of gas flow through the T700 Dynamic Dilution Calibrator is centrally critical to its ability to mix calibration gases accurately. This control is established in several ways.

10.2.1.1. **Diluent and Source Gas Flow Control**

Diluent and source gas flow in the T700 calibrator is a directly and dynamically controlled by using highly accurate Mass Flow Controller. These MFCs include internal sensors that determine the actual flow of gas though each and feedback control circuitry that uses this data to adjust the flow as required. The MFCs consist of a shunt, a sensor, a solenoid valve and the electronic circuitry required to operate them.

The shunt divides the gas flow such that the flow through the sensor is a precise percentage of the flow through the valve. The flow through the sensor is always laminar.

The MFCs internal sensor operates on a unique thermal-electric principle. A metallic capillary tube is heated uniformly by a resistance winding attached to the midpoint of the capillary. Thermocouples are welded at equal distances from the midpoint of the tube. At zero air flow the temperature of both thermocouples will be the same. When flow occurs through the tubing, heat is transferred from the tube to the gas on the inlet side and from the gas back to the tube on the outlet side creating an asymmetrical temperature distribution. The thermocouples sense this decrease and increase of temperature in the capillary tube and produces a mVDC output signal proportional to that change that is proportional to the rate of flow through the MFCs valve.

The electronic circuitry reads the signal output by the thermal flow sensor measured through a capillary tube. This signal is amplified so that it is varies between 0.00 VDC and 5.00 VDC. A separate 0 to 5 VDC command voltage is also generated that is proportional to the target flow rate requested by the T700’s CPU. The 0-5VDC command signal is electronically subtracted from the 0-5VDC flow signal. The amount and direction of the movement is dependent upon the value and the sign of the differential signal.

The MFCs valve is an automatic metering solenoid type; its height off the seat is controlled by the voltage in its coil. The controller’s circuitry amplifies and the differential signal obtained by comparing the control voltage to the flow sensor output and uses it to drive the solenoid valve.

The entire control loop is set up so that as solenoid valve opens and closes to vary the flow of gas through the shunt, valve and sensor in an attempt to minimize the differential between the control voltage for the target flow rate and the flow sensor output voltage generated by the actual flow rate of gas through the controller.

This process is heavily dependant on the capacity of the gas to heat and cool. Since the heat capacity of many gases is relatively constant over wide ranges of temperature and pressure, the flow meter is calibrated directly in molar mass units for known gases (see Section 3.4.6.3). Changes in gas composition usually only require application of a simple multiplier to the air calibration to account for the difference in heat capacity and thus the flow meter is capable of measuring a wide variety of gases.

10.2.1.2. **Flow Control Assemblies for Optional O_3 Components**

Whereas the gas flow rates for the final mixing of gases is controlled directly by the calibrator's MFCS, under direction of the CPU, other gas flow rates in the calibrator are set by various flow control assemblies located in the gas stream(s). These orifices are not adjusted but maintain precise volumetric control as long as the a critical pressure ratio is maintained between the upstream and the downstream orifice.

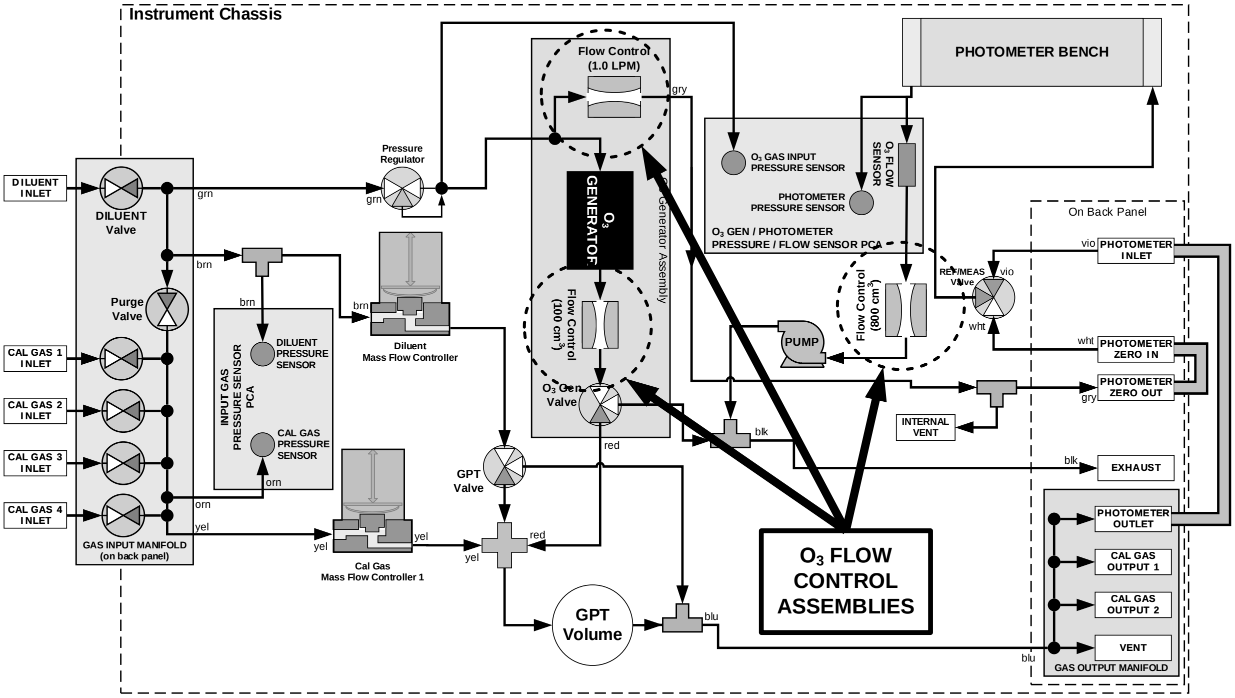
Instrument Chassis
DILUENT INLET
DILUENT Valve
Purge Valve
CAL GAS 1 INLET
CAL GAS 2 INLET
CAL GAS 3 INLET
CAL GAS 4 INLET
GAS INPUT MANIFOLD (on back panel)
grn
brn
orn
yel
INPUT GAS PRESSURE SENSOR PCA
DILUENT PRESSURE SENSOR
CAL GAS PRESSURE SENSOR
Pressure Regulator
Diluent Mass Flow Controller
Cal Gas Mass Flow Controller 1
GPT Valve
red
GPT Volume
blu
Flow Control (1.0 LPM)
gry
O3 GENERATOR
O3 Generator Assembly
Flow Control (100 cm3)
O3 Gen. Valve
O3 GAS INPUT PRESSURE SENSOR
PHOTOMETER PRESSURE SENSOR
O3 FLOW SENSOR
O3 GEN / PHOTOMETER PRESSURE / FLOW SENSOR PCA
PHOTOMETER BENCH
Flow Control (800 cm3)
PUMP
REF/MEAS Valve
vio
wht
blk
INTERNAL VENT
O3 FLOW CONTROL ASSEMBLIES
On Back Panel
PHOTOMETER INLET
PHOTOMETER ZERO IN
PHOTOMETER ZERO OUT
EXHAUST
PHOTOMETER OUTLET
CAL GAS OUTPUT 1
CAL GAS OUTPUT 2
VENT
GAS OUTPUT MANIFOLD

Figure 10-1: Location of Gas Flow Control Assemblies for T700's with O_3 Options Installed

The flow orifice assemblies consist of:

- A critical flow orifice.
- Two o-rings: Located just before and after the critical flow orifice, the o-rings seal the gap between the walls of assembly housing and the critical flow orifice.
- A spring: Applies mechanical force needed to form the seal between the o-rings, the critical flow orifice and the assembly housing.

10.2.1.3. **Critical Flow Orifices**

The most important component of the flow control assemblies is the critical flow orifice.

Critical flow orifices are a remarkably simple way to regulate stable gas flow rates. They operate without moving parts by taking advantage of the laws of fluid dynamics. By restricting the flow of gas though the orifice, a pressure differential is created. This pressure differential combined with the action of the calibrator's pump draws the gas through the orifice.

As the pressure on the downstream side of the orifice (the pump side) continues to drop, the speed that the gas flows though the orifice continues to rise. Once the ratio of upstream pressure to downstream pressure is greater than 2:1, the velocity of the gas through the orifice reaches the speed of sound. As long as that ratio stays at least 2:1 the gas flow rate is unaffected by any fluctuations, surges, or changes in downstream pressure because such variations only travel at the speed of sound themselves and are therefore cancelled out by the sonic shockwave at the downstream exit of the critical flow orifice.

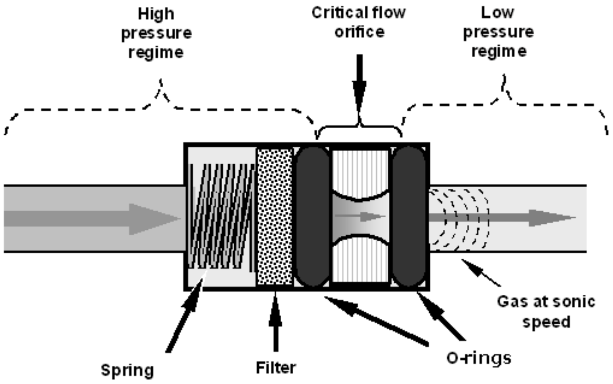

Figure 10-2: Flow Control Assembly & Critical Flow Orifice

The actual flow rate of gas through the orifice (volume of gas per unit of time), depends on the size and shape of the aperture in the orifice. The larger the hole, the more gas molecules (moving at the speed of sound) pass through the orifice.

With a nominal pressure of 10 in-Hg-A in the sample/reaction cell, the necessary ratio of reaction cell pressure to pump vacuum pressure of 2:1 is exceeded and accommodating a wide range of variability in atmospheric pressure and accounting for pump degradation. This extends the useful life of the pump. Once the pump degrades to the point where the sample and vacuum pressures is less than 2:1, a critical flow rate can no longer be maintained.

10.2.2. **INTERNAL GAS PRESSURE SENSORS**

The T700 includes a single pressure regulator. Depending upon how many and which options are installed in the T700 calibrator, there are between two and four pressure sensors installed as well.

In the basic unit a printed circuit, assembly located near the front of the calibrator near the MFCs includes sensors that measure the pressure of the diluent gas and the source gas currently selected to flow into the calibrator. The calibrator monitors these sensors.

- Should the pressure of one of them fall below 15 PSIG or rise above 36 PSIG a warning is issued.

In units with the optional O_3 generator installed a second PCA located at the rear of the calibrator just behind the generator assembly includes a sensor that measures the gas pressure of the zero air flowing into the generator. A regulator is also located on the gas input to the O_3 generator that maintains the pressure differential needed for the critical flow orifice to operate correctly.

- Should the pressure of one of this sensor fall below 15 PSIG or rise above 25 PSIG a warning is issued.

In calibrators with O_3 photometers installed, a second pressure located on the rear PCA measures the pressure of gas in the photometer's absorption tube. This data is used by the CPU when calculating the O_3 concentration inside the absorption tube.

10.3. ELECTRONIC OPERATION

10.3.1. OVERVIEW

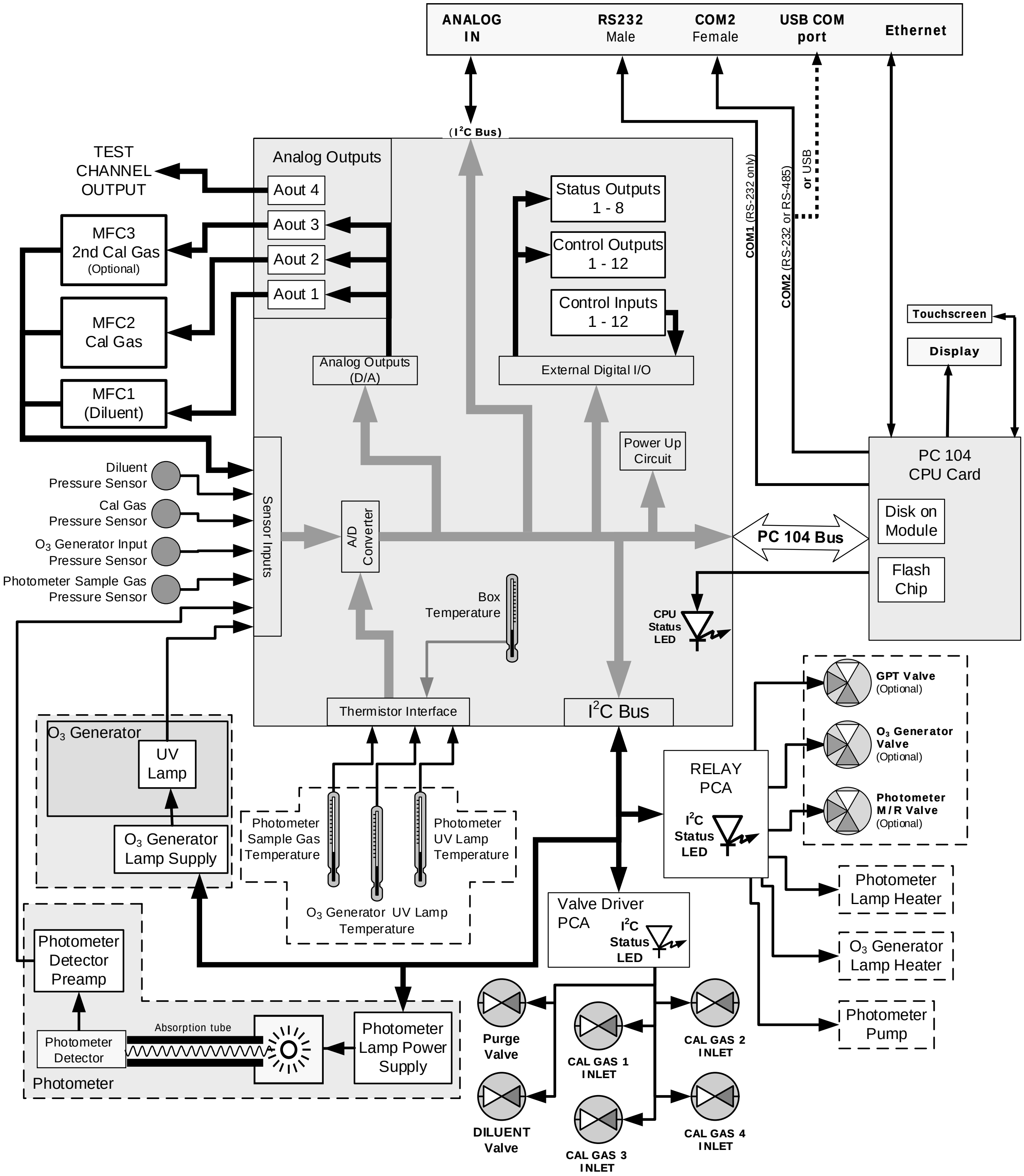
ANALOG IN
RS232 Male
COM2 Female
USB COM port
Ethernet
(I²C Bus)
TEST CHANNEL OUTPUT
Analog Outputs
Aout 4
Aout 3
Aout 2
Aout 1
MFC3 2nd Cal Gas (Optional)
MFC2 Cal Gas
MFC1 (Diluent)
Status Outputs 1 - 8
Control Outputs 1 - 12
Control Inputs 1 - 12
COM1 (RS-232 only)
COM2 (RS-232 or RS-485)
or USB
Touchscreen
Display
Analog Outputs (D/A)
External Digital I/O
Power Up Circuit
PC 104 CPU Card
Disk on Module
Flash Chip
PC 104 Bus
Diluent Pressure Sensor
Cal Gas Pressure Sensor
O3 Generator Input Pressure Sensor
Photometer Sample Gas Pressure Sensor
Sensor Inputs
A/D Converter
Box Temperature
CPU Status LED
Thermistor Interface
I2C Bus
GPT Valve (Optional)
O3 Generator Valve (Optional)
Photometer M/R Valve (Optional)
O3 Generator
UV Lamp
O3 Generator Lamp Supply
Photometer Sample Gas Temperature
Photometer UV Lamp Temperature
O3 Generator UV Lamp Temperature
RELAY PCA
I2C Status LED
Photometer Lamp Heater
O3 Generator Lamp Heater
Photometer Pump
Valve Driver PCA
I2C Status LED
Photometer Detector Preamp
Absorption tube
Photometer Detector
Photometer
Photometer Lamp Power Supply
Purge Valve
DILUENT Valve
CAL GAS 1 INLET
CAL GAS 2 INLET
CAL GAS 3 INLET
CAL GAS 4 INLET

Figure 10-3: T700 Electronic Block Diagram

The core of the calibrator is a microcomputer (referred to as the CPU) that controls various internal processes, interprets data, makes calculations, and reports results using specialized firmware developed by Teledyne API. It communicates with the user as well as receives data from and issues commands to a variety of peripheral devices via a separate printed circuit assembly called the motherboard.

The motherboard is directly mounted to the inside rear panel and collects data, performs signal conditioning duties and routes incoming and outgoing signals between the CPU and the calibrator's other major components.

Data are generated by the various sub components of the T700 (e.g. flow data from the MFCs, O_3 concentration from the optional photometer). Analog signals are converted into digital data by a unipolar, analog-to-digital converter, located on the motherboard.

A variety of sensors report the physical and operational status of the calibrator's major components, again through the signal processing capabilities of the motherboard. These status reports are used as data for the concentration calculations and as trigger events for certain control commands issued by the CPU. They are stored in memory by the CPU and in most cases can be viewed but the user via the front panel display.

The CPU communicates with the user and the outside world in a variety of manners:

- Through the calibrator's front panel LCD touchscreen interface;
- RS 232 and RS485 serial I/O channels;
- Via Ethernet;
- Various digital and analog outputs, and
- A set of digital control input channels.

Finally, the CPU issues commands via a series of relays and switches (also over the I^2C bus) located on a separate printed circuit assembly to control the function of key electromechanical devices such as heaters, motors and valves.

10.3.2. **CPU**

The unit's CPU card (Figure 10-4) is installed on the motherboard located inside the rear panel. It is a low power (5 VDC, 720mA max), high performance, Vortex86SX-based microcomputer running Windows CE. Its operation and assembly conform to the PC-104 specification and features the following:

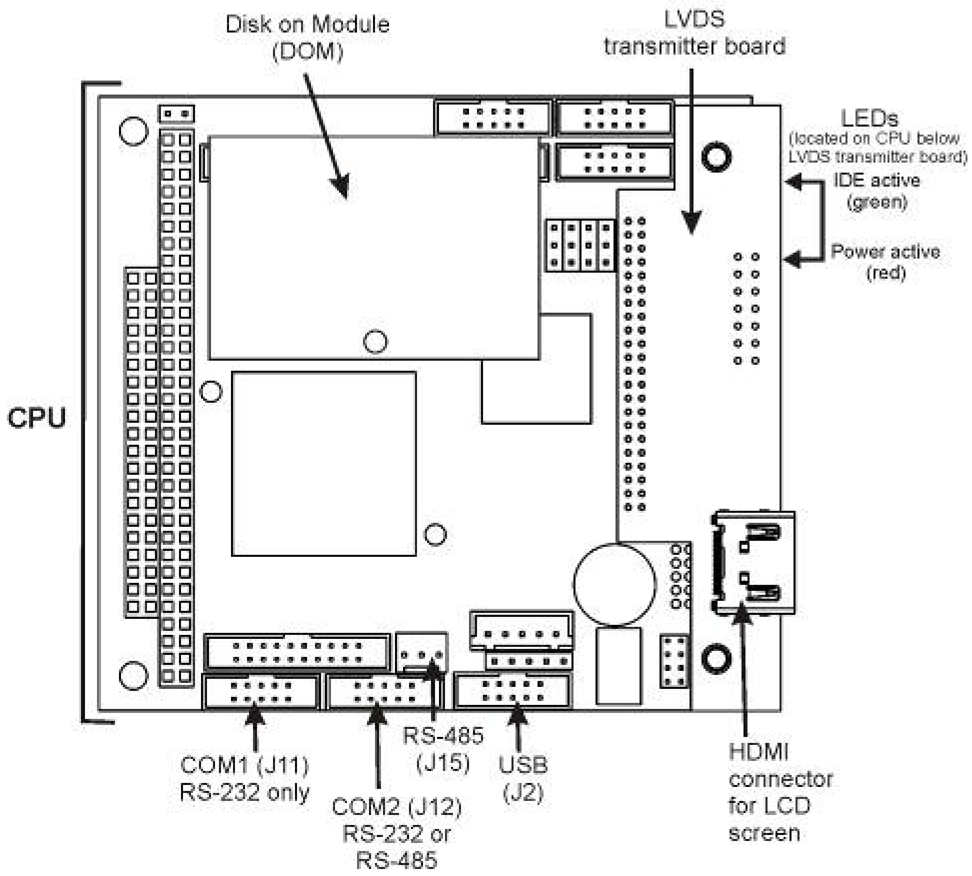
Disk on Module (DOM)
LVDS transmitter board
LEDs (located on CPU below LVDS transmitter board)
IDE active (green)
Power active (red)
CPU
COM1 (J11) RS-232 only
COM2 (J12) RS-232 or RS-485
RS-485 (J15)
USB (J2)
HDMI connector for LCD screen

Figure 10-4: T700 CPU Board Annotated

The CPU includes two types of non-volatile data storage: an embedded 2MB flash chip and a Disk on Module (DOM).

10.3.2.1. **Disk-on-Module (DOM)**

The DOM is a 44-pin IDE flash chip with a storage capacity up to 256 MB. It is used to store the computer’s operating system, the Teledyne API firmware, and most of the operational data. The LEDs on the DOM indicate power and reading/writing to or from the DOM.

10.3.2.2. **Flash Chip**

This non-volatile, embedded flash chip includes 2MB of storage for calibration data as well as a backup of the analyzer configuration. Storing these key data on a less heavily accessed chip significantly decreases the chance of data corruption.

In the unlikely event that the flash chip should fail, the calibrator will continue to operate with just the DOM. However, all configuration information will be lost, requiring the unit to be recalibrated.

10.3.3. **RELAY PCA**

The relay PCA is one of the central switching and power distribution units of the calibrator. It contains power relays, valve drivers and status LEDs for all heated zones and valves, as well as thermocouple amplifiers, power distribution connectors and the two switching power supplies of the calibrator. The relay PCA communicates with the motherboard over the I^2C bus and can be used for detailed trouble-shooting of power problems and valve or heater functionality.

Generally, the relay PCA is located in the right-rear quadrant of the calibrator and is mounted vertically on the back of the same bracket as the instrument’s DC power supplies, however the exact location of the relay PCA may differ from model to model (see Figure 3-5 or Figure 3-6).

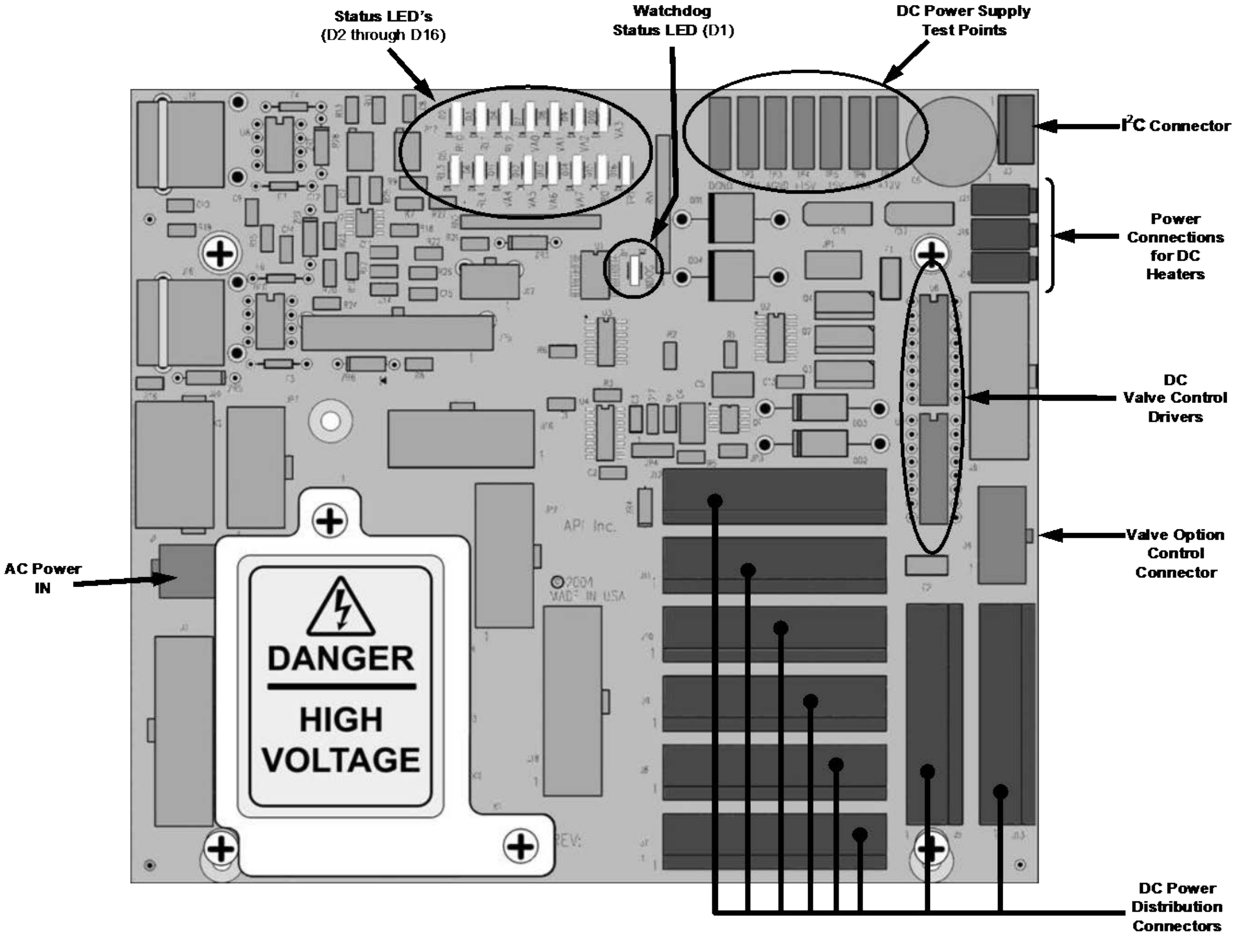
Status LED’s (D2 through D16)
Watchdog Status LED (D1)
DC Power Supply Test Points
I²C Connector
Power Connections for DC Heaters
DC Valve Control Drivers
Valve Option Control Connector
AC Power IN
DANGER
HIGH VOLTAGE
API Inc.
©2004 MADE IN USA
DC Power Distribution Connectors

Figure 10-5: Relay PCA

This is the base version of the Relay PCA. It does not include the AC relays and is used in instruments where there are no AC powered components requiring control. A plastic insulating safety shield covers the empty AC Relay sockets.

WARNING

NEVER REMOVE THIS SAFETY SHIELD WHILE THE INSTRUMENT IS PLUGGED IN AND TURNED ON. THE CONTACTS OF THE AC RELAY SOCKETS BENEATH THE SHIELD CARRY HIGH AC VOLTAGES EVEN WHEN NO RELAYS ARE PRESENT

10.3.3.1. **Valve Control**

The relay PCA also hosts two valve driver chips, each of which can drive up four valves. In the T700, the relay PCA controls only those valves associated with the O_3 generator and photometer options. All valves related to source gas and diluent gas flow are controlled by a separate valve driver PCA (see Section 10.3.4).

10.3.3.2. **Heater Control**

The relay PCA controls the various DC heaters related to the O_3 generator and photometer options.

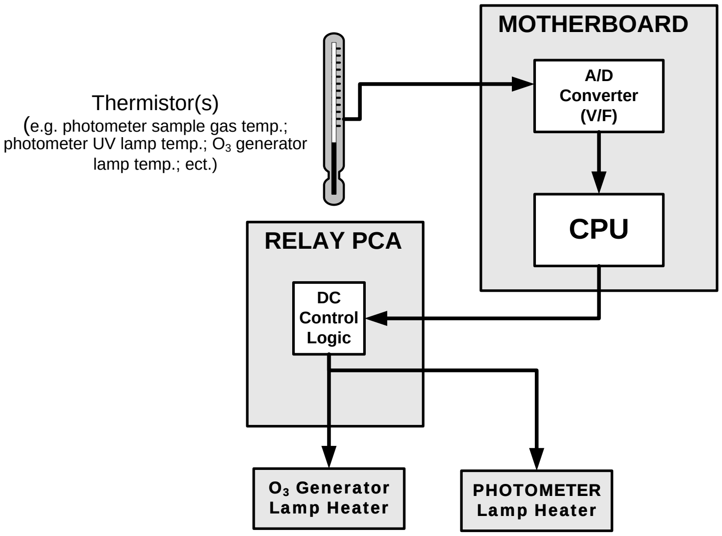
MOTHERBOARD
A/D Converter (V/F)
CPU
Thermistor(s)
(e.g. photometer sample gas temp.; photometer UV lamp temp.; O₃ generator lamp temp.; ect.)
RELAY PCA
DC Control Logic
O₃ Generator Lamp Heater
PHOTOMETER Lamp Heater

Figure 10-6: Heater Control Loop Block Diagram.

10.3.3.3. **Relay PCA Status LEDs & Watch Dog Circuitry**

Thirteen LEDs are located on the calibrator’s relay PCA to indicate the status of the calibrator’s heating zones and some of its valves as well as a general operating watchdog indicator. Table 10-1 shows the status of these LEDs and their respective functionality.

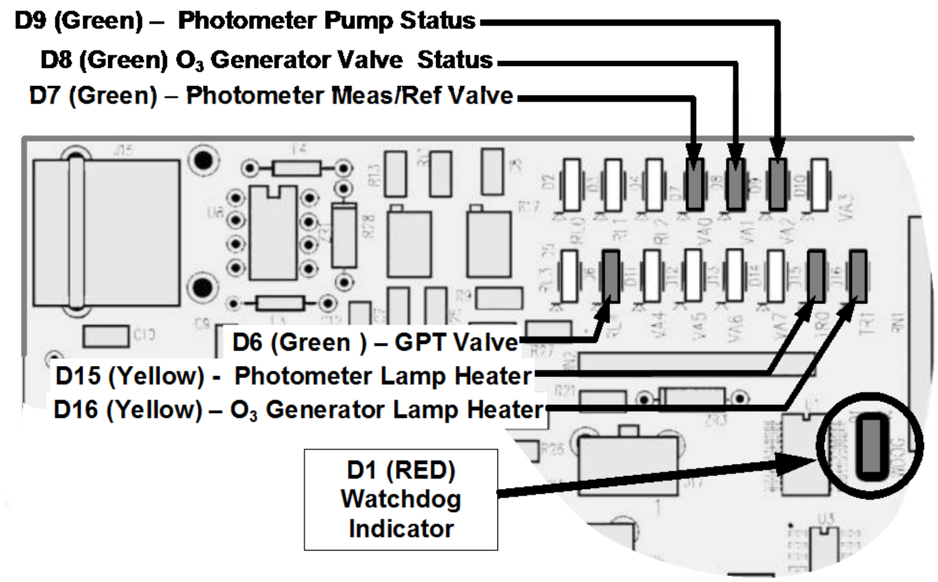
D9 (Green) – Photometer Pump Status
D8 (Green) O_3 Generator Valve Status
D7 (Green) – Photometer Meas/Ref Valve
D6 (Green) – GPT Valve
D15 (Yellow) - Photometer Lamp Heater
D16 (Yellow) – O_3 Generator Lamp Heater
D1 (RED) Watchdog Indicator

Figure 10-7: Status LED Locations – Relay PCA

Table 10-1: Relay PCA Status LEDs

LED	COLOR	DESCRIPTION	FUNCTION
D1	Red	Watchdog Circuit; I^2C bus operation.	Blinks when I^2C bus is operating properly
D2-6	SPARE		
D7[1]	Green	Photometer Meas/Ref Valve	When lit the valve opens the REFERENCE gas path
D8[2]	Green	O_3 generator Valve status	When lit the valve open to O_3 generator gas path
D9	Green	Photometer Pump status	When lit the pump is turned on.
D6[1,2]	Yellow	GPT Valve status	When lit the valve opens the GT Chamber
D10 - 14	SPARE		
D15[1]	Yellow	Photometer Heater Status	When lit the photometer UV lamp heater is on
D16[2]	Yellow	O_3 Generator Heater Status	When lit the O_3 generator UV lamp heater is on

[1] Only applies on calibrators with photometer options installed.

[2] Only applies on calibrators with O_3 generator options installed.

10.3.3.4. Relay PCA Watchdog Indicator (D1)

The most important of the status LEDs on the relay PCA is the red I^2C Bus watchdog LED, D1. It is controlled directly by the calibrator’s CPU over the I^2C bus. Special circuitry on the relay PCA watches the status of D1. Should this LED ever stay ON or OFF for 30 seconds (indicating that the CPU or I^2C bus has stopped functioning) this Watchdog Circuit automatically shuts all valves and turns off all heaters and lamps.

10.3.4. **VALVE DRIVER PCA**

The valves that operate the T700 calibrator’s main source gas and diluent gas inputs are controlled by a PCA that is attached directly to the input valve manifold (see Figure 3-5 or Figure 3-6). Like the relay PCA, the valve driver PCA communicates with T700’s CPU through the motherboard over the I^2C bus.

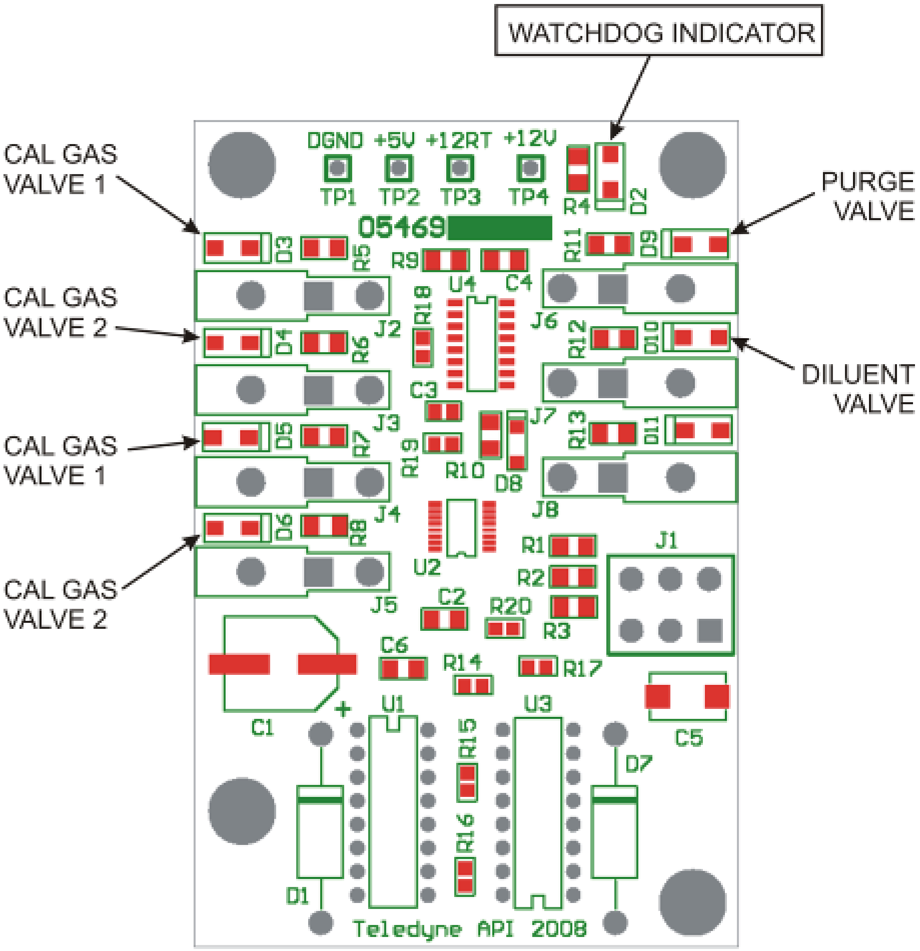
WATCHDOG INDICATOR
CAL GAS VALVE 1
CAL GAS VALVE 2
CAL GAS VALVE 1
CAL GAS VALVE 2
PURGE VALVE
DILUENT VALVE
DGND +5V +12RT +12V
TP1 TP2 TP3 TP4
05469
R4 D2
D3 R5 R9 R11 D9
U4 C4
R18 J2 J6
D4 R6 R12 D10
C3
J3 J7
D5 R7 R19 R10 D8 R13 D11
J4 J8
D6 R8 U2 R1 J1
R2
J5 C2 R20 R3
C6 R14 R17
C1 U1 U3 C5
R15 D7
R16
D1
Teledyne API 2008

Figure 10-8: Status LED Locations – Valve Driver PCA

10.3.4.1. **Valve Driver PCA Watchdog Indicator**

The most important of the status LEDs on the relay PCA is the red I^2C Bus watchdog LED. It is controlled directly by the calibrator’s CPU over the I^2C bus. Like the watchdog LED on the relay PCA, should this LED ever stay ON or OFF for 30 seconds if the CPU or I^2C bus has stopped functioning, this Watchdog Circuit automatically shuts all valves and turns off all heaters and lamps.

10.3.5. MOTHERBOARD

This is the largest electronic assembly in the calibrator and is mounted to the rear panel as the base for the CPU board and all I/O connectors. This printed circuit assembly provides a multitude of functions including A/D conversion, digital input/output, PC-104 to I^2C translation, temperature sensor signal processing and is a pass through for the RS-232 and RS-485 signals.

10.3.5.1. A to D Conversion

Analog signals, such as the voltages received from the calibrator's various sensors, are converted into digital signals that the CPU can understand and manipulate by the analog to digital converter (A/D). Under the control of the CPU, this functional block selects a particular signal input and then coverts the selected voltage into a digital word.

The A/D consists of a voltage-to-frequency (V-F) converter, a programmable logic device (PLD), three multiplexers, several amplifiers and some other associated devices. The V-F converter produces a frequency proportional to its input voltage. The PLD counts the output of the V-F during a specified time period, and sends the result of that count, in the form of a binary number, to the CPU.

The A/D can be configured for several different input modes and ranges but in uni-polar mode with a +5V full scale. The converter includes a 1% over and under-range. This allows signals from -0.05V to +5.05V to be fully converted.

For calibration purposes, two reference voltages are supplied to the A/D converter: Reference ground and +4.096 VDC. During calibration, the device measures these two voltages and outputs their digital equivalent to the CPU. The CPU uses these values to compute the converter's offset and slope, then uses these factors for subsequent calculations.

10.3.5.2. Sensor Inputs

The key analog sensor signals are coupled to the A/D converter through the master multiplexer from two connectors on the motherboard. Terminating resistors (100 kΩ) on each of the inputs prevent crosstalk between the sensor signals.

10.3.5.3. Thermistor Interface

This circuit provides excitation, termination and signal selection for several negative-coefficient, thermistor temperature sensors located inside the calibrator.

10.3.5.4. Analog Outputs

The T700 calibrator comes equipped with one analog output. It can be set by the user to output a signal level representing any one of the test parameters (see Table 4-14) and will output an analog VDC signal that rises and falls in relationship with the value of the chosen parameter.

10.3.5.5. **External Digital I/O**

The external digital I/O performs two functions.

The **STATUS** outputs carry logic-level (5V) signals through an optically isolated 8-pin connector on the rear panel of the calibrator. These outputs convey on/off information about certain calibrator conditions such as **SYSTEM OK**. They can be used to interface with certain types of programmable devices.

The **CONTROL** outputs can be used to initiate actions by external peripheral devices in conjunction with individual steps of a calibration sequence (see Section 4.3.2.8).

The **CONTROL** inputs can be initiated by applying 5V DC power from an external source such as a PLC or data logger (Section 4.3.1.5). Zero and span calibrations can be initiated by contact closures on the rear panel.

10.3.5.6. **I^2C Data Bus**

I^2C is a two-way, clocked, bi-directional, digital serial I/O bus that is used widely in commercial and consumer electronic systems. A transceiver on the motherboard converts data and control signals from the PC-104 bus to I^2C. The data is then fed to the relay board, optional analog input board and valve driver board circuitry.

10.3.5.7. **Power-up Circuit**

This circuit monitors the +5V power supply during calibrator start-up and sets the analog outputs, external digital I/O ports, and I^2C circuitry to specific values until the CPU boots and the instrument software can establish control.

10.3.6. INPUT GAS PRESSURE SENSOR PCA

This PCA, physically located to the just to the left of the MFCs, houses two pressure sensors that measure the pressure of the incoming diluent gas (zero air) and calibration gases relative to ambient pressure. Pneumatically, both sensors measure their respective gases just upstream from the associated MFC.

This data is used in calculating the concentration of calibration mixtures.

The following TEST functions are viewable from the instrument’s front panel:

- **CALPRESS** - the pressure of the selected calibration gas input reported in **PSIG.**
- **DILPRESS** - the pressure of the diluent gas (zero air) input also reported in **PSIG.**

10.3.7. POWER SUPPLY AND CIRCUIT BREAKER

The T700 calibrator operates in two main AC power ranges: 100-120 VAC and 220-240 VAC (both ± 10%) between 47 and 63 Hz. A 5-ampere circuit breaker is built into the ON/OFF switch. In case of a wiring fault or incorrect supply power, the circuit breaker will automatically turn off the calibrator.

WARNING

The T700 calibrator is equipped with a universal power supply that allows it to accept any AC power configuration, within the limits specified in Table 2-2.

Should the power circuit breaker trip correct the condition causing this situation before turning the calibrator back on.

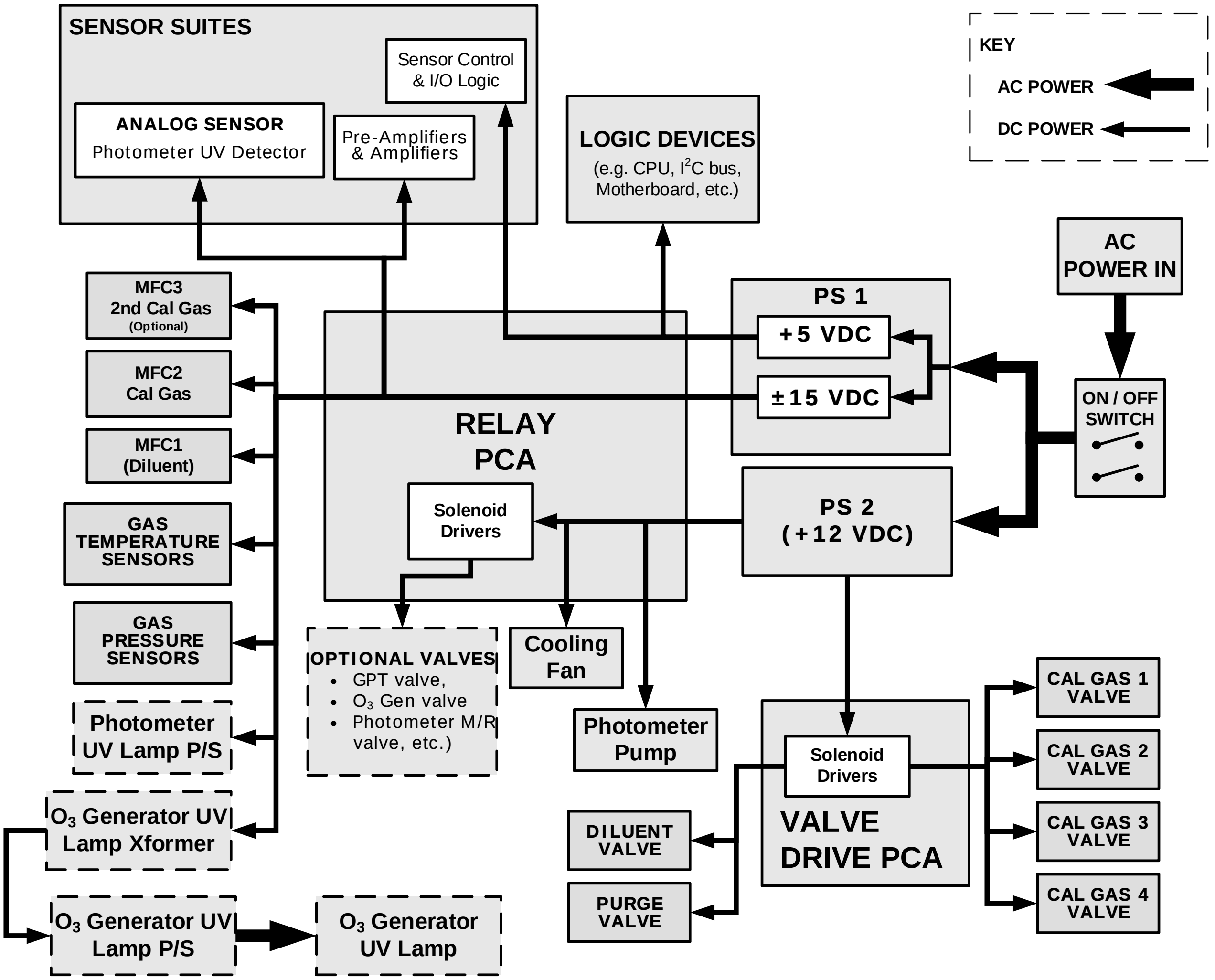
SENSOR SUITES
Sensor Control & I/O Logic
ANALOG SENSOR
Photometer UV Detector
Pre-Amplifiers & Amplifiers
LOGIC DEVICES
(e.g. CPU, I²C bus, Motherboard, etc.)
KEY
AC POWER
DC POWER
AC POWER IN
MFC3 2nd Cal Gas (Optional)
MFC2 Cal Gas
MFC1 (Diluent)
GAS TEMPERATURE SENSORS
GAS PRESSURE SENSORS
Photometer UV Lamp P/S
O₃ Generator UV Lamp Xformer
O₃ Generator UV Lamp P/S
O₃ Generator UV Lamp
RELAY PCA
Solenoid Drivers
PS 1
+5 VDC
±15 VDC
ON / OFF SWITCH
PS 2 (+12 VDC)
OPTIONAL VALVES
GPT valve,
O₃ Gen valve
Photometer M/R valve, etc.)
Cooling Fan
Photometer Pump
DILUENT VALVE
PURGE VALVE
Solenoid Drivers
VALVE DRIVE PCA
CAL GAS 1 VALVE
CAL GAS 2 VALVE
CAL GAS 3 VALVE
CAL GAS 4 VALVE

Figure 10-9: T700 Power Distribution Block diagram

10.4. FRONT PANEL TOUCHSCREEN/DISPLAY INTERFACE

The most commonly used method for communicating with the T700 Dynamic Dilution Calibrator is via the instrument's front panel LCD touchscreen display from where users can input data and receive information directly.

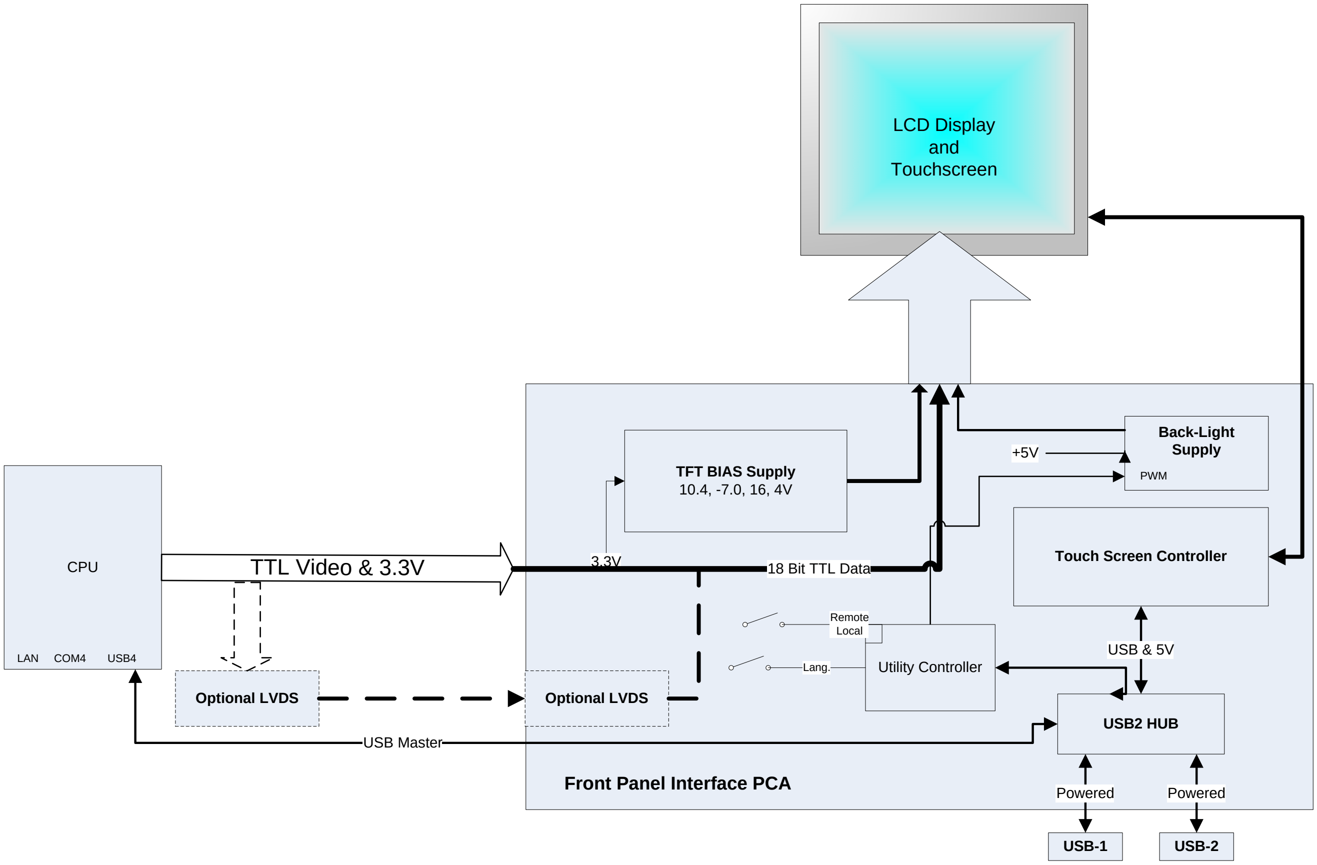
LCD Display
and
Touchscreen
CPU
LAN
COM4
USB4
TTL Video & 3.3V
3.3V
18 Bit TTL Data
TFT BIAS Supply
10.4, -7.0, 16, 4V
+5V
Back-Light Supply
PWM
Touch Screen Controller
Remote
Local
Lang.
Utility Controller
USB & 5V
Optional LVDS
Optional LVDS
USB2 HUB
USB Master
Front Panel Interface PCA
Powered
Powered
USB-1
USB-2

Figure 10-10: Front Panel Display Interface Block Diagram

The LCD display is controlled directly by the CPU board. The touchscreen is interfaced to the CPU by means of a touchscreen controller that connects to the CPU via the internal USB bus and emulates a computer mouse.

10.4.1.1. **Front Panel Interface PCA**

The front panel interface PCA controls the various functions of the display and touchscreen. For driving the display it provides connection between the CPU video controller and the LCD display module. This PCA also contains:

- power supply circuitry for the LCD display module
- a USB hub that is used for communications with the touchscreen controller and the two front panel USB device ports
- the circuitry for powering the display backlight

10.5. SOFTWARE OPERATION

The T700 calibrator's core module is a high performance, X86-based microcomputer running Windows CE. On top of the Windows CE shell, special software developed by Teledyne API interprets user commands from various interfaces, performs procedures and tasks and stores data in the CPU's memory devices. Figure 10-11 shows a block diagram of this software functionality.

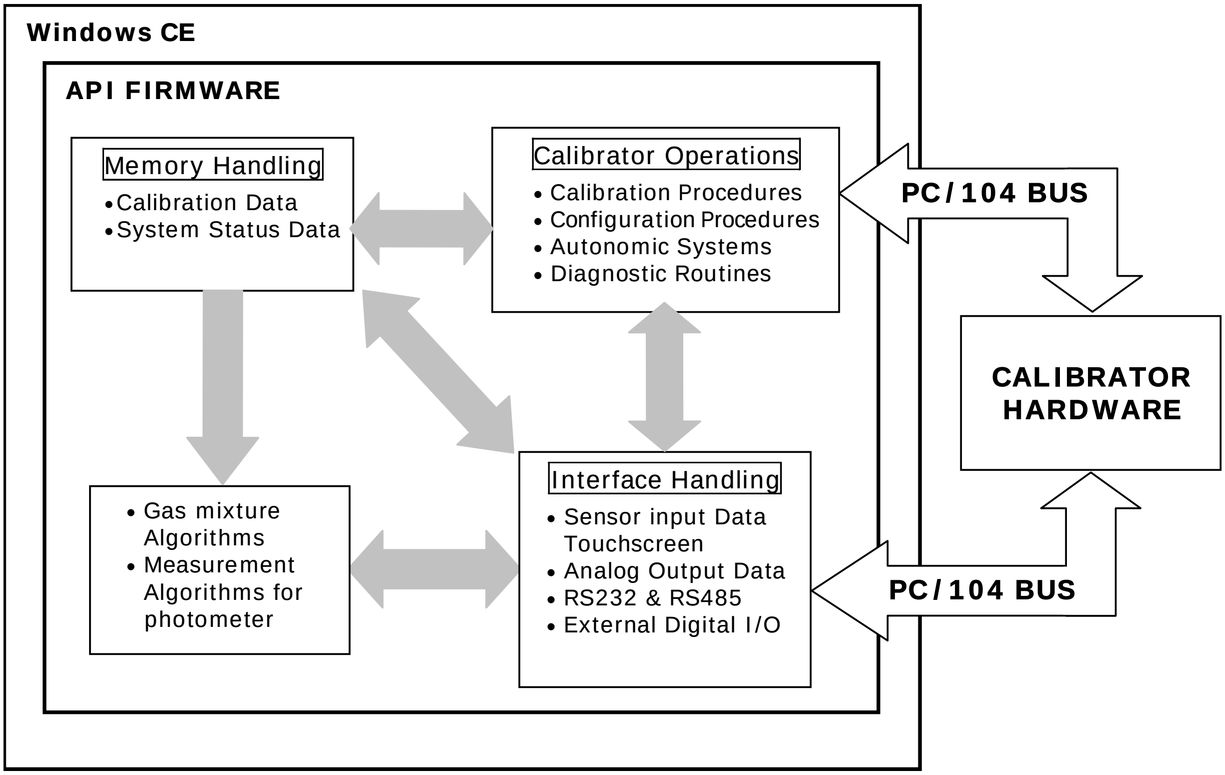
Windows CE
API FIRMWARE
Memory Handling
•Calibration Data
•System Status Data
Calibrator Operations
• Calibration Procedures
• Configuration Procedures
• Autonomic Systems
• Diagnostic Routines
PC/104 BUS
CALIBRATOR HARDWARE
• Gas mixture Algorithms
• Measurement Algorithms for photometer
Interface Handling
• Sensor input Data Touchscreen
• Analog Output Data
• RS232 & RS485
• External Digital I/O
PC/104 BUS

Figure 10-11: Schematic of Basic Software Operation

10.6. O_3 GENERATOR OPERATION

10.6.1. PRINCIPLE OF PHOTOLYTIC O_3 GENERATION

Ozone is a naturally occurring substance that is sometimes called "activated oxygen". It contains three atoms of oxygen (O_3) instead of the usual two found in normal oxygen (O_2) that is essential for life. Because of its relatively short half-life, ozone cannot be bottled and stored for later use and therefore must always be generated on-site by an ozone generator. The two main principles of ozone generation are UV-light and corona-discharge. While the corona-discharge method is most common because of its ability to generate very high concentrations (up to 50%), it is inappropriate for calibration needs since the level of fine control over the O_3 concentration is poor. Also, the corona-discharge method produces a small amount of NO_2 as a byproduct, which also may be undesirable in a calibration application.

The UV-light method is most feasible in calibration applications where production of low, accurate concentrations of ozone desired. This method mimics the radiation method that occurs naturally from the sun in the upper atmosphere producing the ozone layer. An ultra-violet lamp inside the generator emits a precise wavelength of UV Light (185 nm). Ambient air is passed over an ultraviolet lamp, which splits some of the molecular oxygen (O_2) in the gas into individual oxygen atoms that attach to other existing oxygen molecules (O_2), forming ozone (O_3).

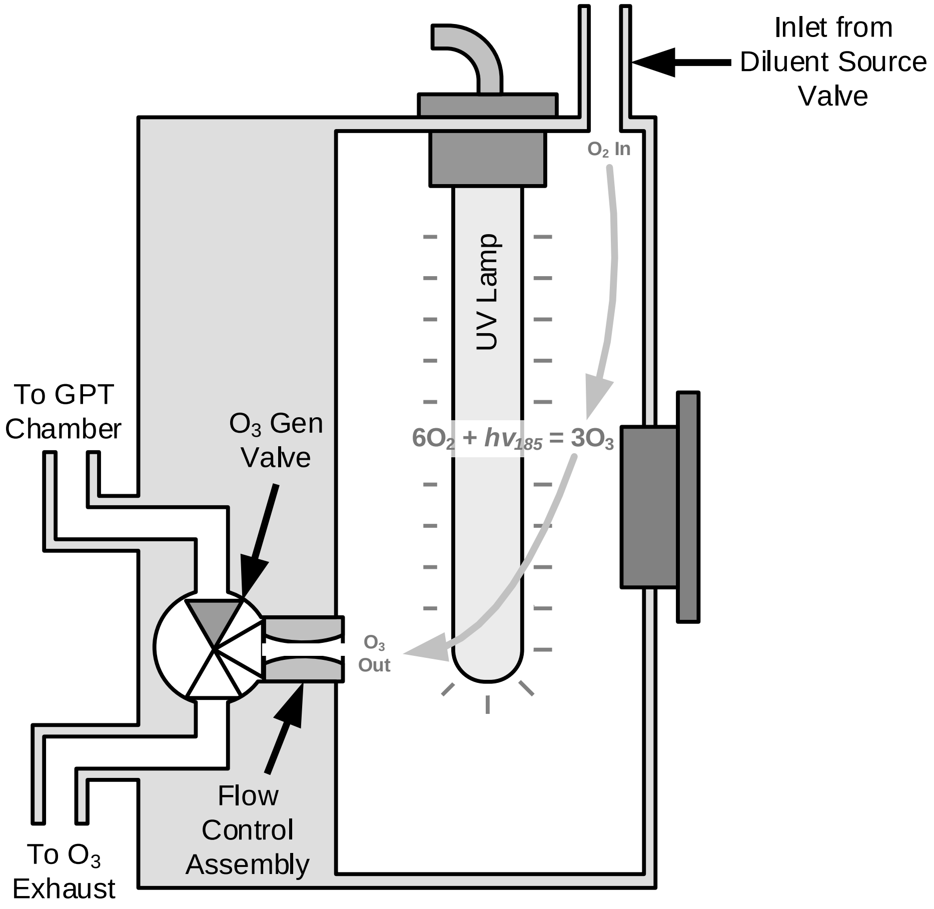

Figure 10-12: O_3 Generator Internal Pneumatics

10.6.2. O_3 GENERATOR – PNEUMATIC OPERATION

Pneumatic flow through the O_3 generator is created by supplying zero air (diluent) to it under pressure. The zero air source must be capable of maintaining a continuous flow rate of at least 100 cm^3/min unless the optional photometer is also installed, in which case the minimum continuous flow rate must be at least 1.1 LPM.

Input and output gas flow is directed by two valves, both of which must be open:

- The diluent inlet valve: This valve is located on the back panel and allows diluent / zero air into the calibrator.
- The O_3 generation valve: This valve is located on the body of the O_3 generator is downstream from the generator chamber itself and directs the output of the generator to either the GPT mixing chamber or the exhaust vent at the back of the calibrator.

The rate of flow through the O_3 generator is controlled by a 100 cm^3/min flow control assembly positioned between the O_3 generation chamber and the O_3 generation valve. A self adjusting pressure regulator on the zero air (diluent) supply gas line maintains the pressure across the critical flow orifice of the flow control assembly (see Section 10.2.1.3).

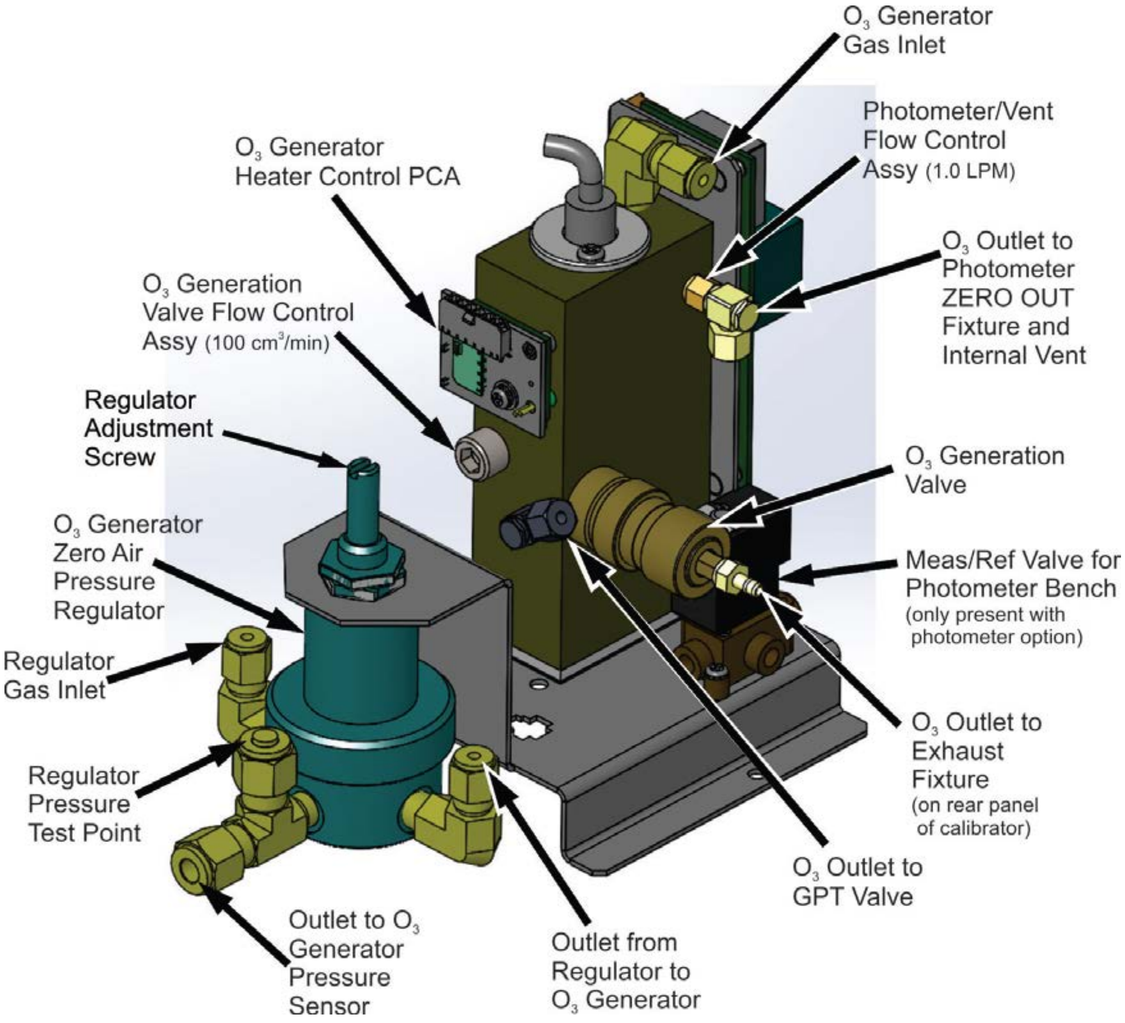
O_3 Generator Gas Inlet
Photometer/Vent Flow Control Assy (1.0 LPM)
O_3 Generator Heater Control PCA
O_3 Outlet to Photometer ZERO OUT Fixture and Internal Vent
O_3 Generation Valve Flow Control Assy (100 cm^3/min)
Regulator Adjustment Screw
O_3 Generation Valve
O_3 Generator Zero Air Pressure Regulator
Meas/Ref Valve for Photometer Bench (only present with photometer option)
Regulator Gas Inlet
O_3 Outlet to Exhaust Fixture (on rear panel of calibrator)
Regulator Pressure Test Point
O_3 Outlet to GPT Valve
Outlet to O_3 Generator Pressure Sensor
Outlet from Regulator to O_3 Generator

Figure 10-13: O_3 Generator Valve and Gas Fixture Locations

10.6.3. O_3 GENERATOR – ELECTRONIC OPERATION

Electronically the O_3 generator and its subcomponents act as peripheral devices operated by the CPU via the motherboard. Sensors, such as the UV lamp thermistor send analog data to the motherboard, where it is digitized. Digital data is sent by the motherboard to the calibrator's CPU and where required stored in either flash memory or on the CPU's Disk-on-Module. Commands from the CPU are sent to the motherboard and forwarded to the various devices via the calibrators I^2C bus.

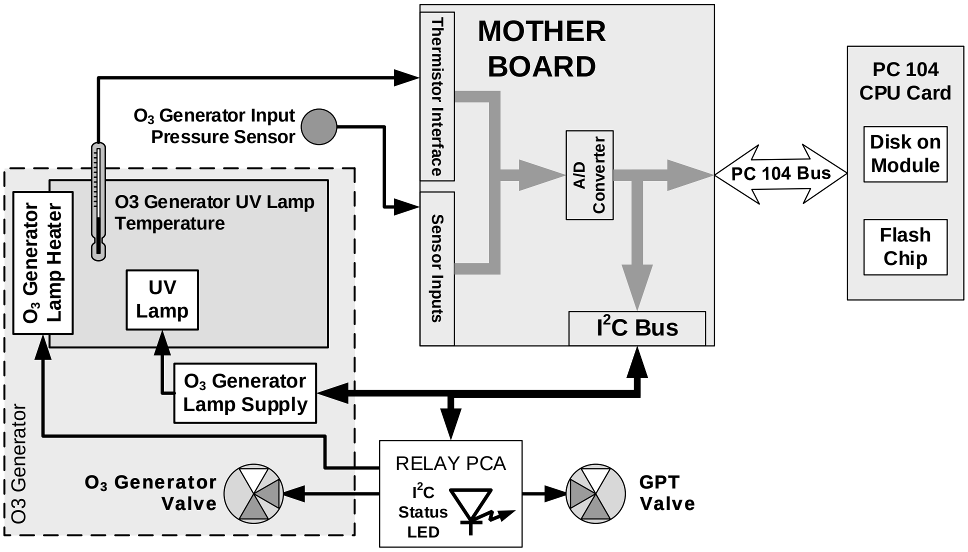
MOTHER BOARD
Thermistor Interface
Sensor Inputs
A/D Converter
I²C Bus
PC 104 Bus
PC 104 CPU Card
Disk on Module
Flash Chip
O₃ Generator Input Pressure Sensor
O3 Generator UV Lamp Temperature
O₃ Generator Lamp Heater
UV Lamp
O₃ Generator Lamp Supply
O3 Generator
O₃ Generator Valve
RELAY PCA
I²C Status LED
GPT Valve

Figure 10-14: O_3 Generator – Electronic Block Diagram

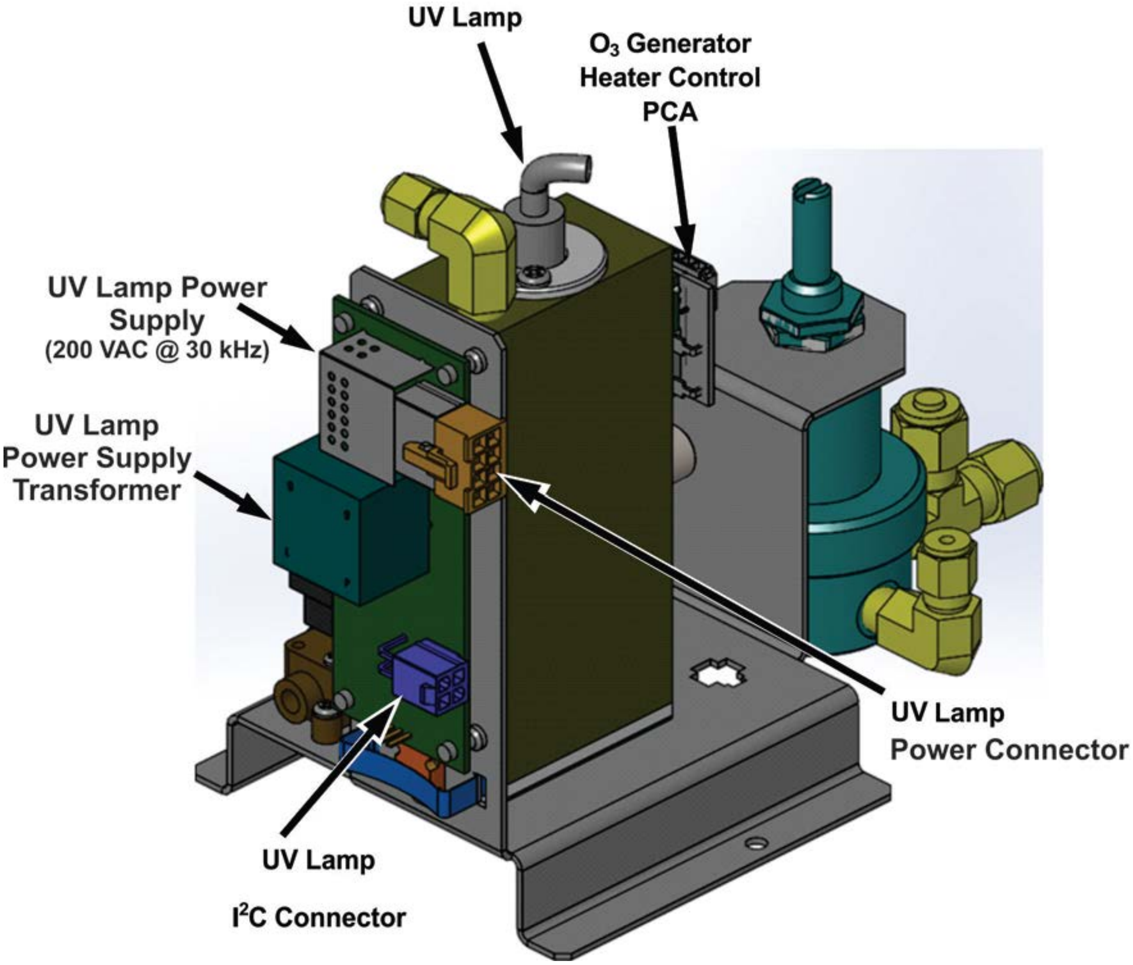
UV Lamp
O_3 Generator Heater Control PCA
UV Lamp Power Supply (200 VAC @ 30 kHz)
UV Lamp Power Supply Transformer
UV Lamp Power Connector
UV Lamp
I^2C Connector

Figure 10-15: O_3 Generator Electronic Components Location

10.6.3.1. **O_3 Generator Temperature Control**

In order to operate at peak efficiency the UV lamp of the T700's O_3 generator is maintained at a constant 48ºC. If the lamp temperature falls below 43ºC or rises above 53ºC a warning is issued by the calibrators CPU.

This temperature is controlled as described in the section on the relay PCA (Section 10.3.3). The location of the thermistor and heater associated with the O_3 generator is shown in Figure 10-16:

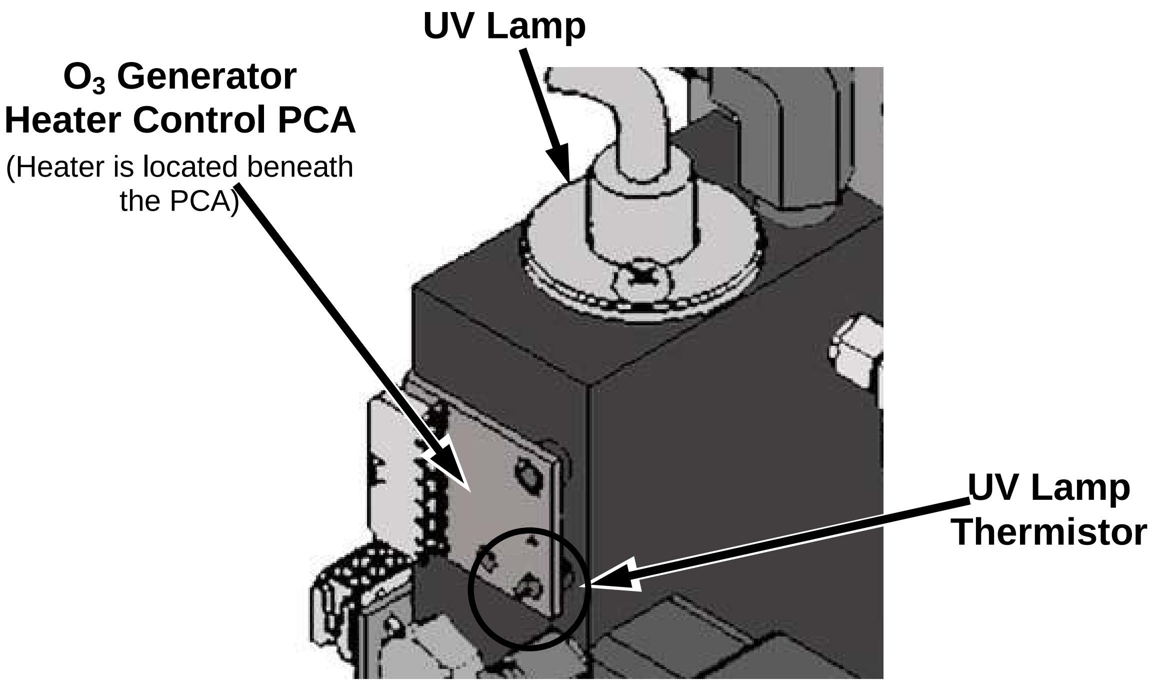
UV Lamp
O_3 Generator Heater Control PCA
(Heater is located beneath the PCA)
UV Lamp Thermistor

Figure 10-16: O_3 Generator Temperature Thermistor and DC Heater Locations

10.6.3.2. Pneumatic Sensor for the O_3 Generator

A pressure sensor, located on the O_3 generator and photometer, pressure/flow sensor PCA (see Figure 3-6), monitors the output gas pressure of the regulator on the O_3 generator's zero air supply. The regulator is adjusted at the factory to maintain a pressure of 20 PSIG on this line. If the pressure drops below 15 PSIG or rises above 25 PSIG a warning is issued.

10.7. PHOTOMETER OPERATION

The Model T700 calibrator's optional photometer determines the concentration of Ozone (O_3) in a sample gas drawn through it. Sample and calibration gases must be supplied at ambient atmospheric pressure in order to establish a stable gas flow through the absorption tube where the gas' ability to absorb ultraviolet (UV) radiation of a certain wavelength (in this case 254 nm) is measured.

Gas bearing O_3 and zero air are alternately routed through the photometer's absorption tube. Measurements of the UV light passing through the sample gas with and without O_3 present are made and recorded.

Calibration of the photometer is performed in software and does not require physical adjustment. During calibration, the CPU's microprocessor measures the current state of the UV Sensor output and various other physical parameters of the calibrator and stores them in memory. The CPU uses these calibration values, the UV absorption measurements made on the sample gas in the absorption tube along with data regarding the current temperature and pressure of the gas to calculate a final O_3 concentration.

10.7.1. MEASUREMENT METHOD

10.7.1.1. Calculating O_3 Concentration

The basic principle by which photometer works is called Beer's Law (also referred to as the Beer-Lambert equation). It defines the how light of a specific wavelength is absorbed by a particular gas molecule over a certain distance at a given temperature and pressure. The mathematical relationship between these three parameters for gases at Standard Temperature and Pressure (STP) is:

Equation 10-5

$$I = I_0 e^{-\alpha LC} \quad \text{at STP}$$

Where:

I_o is the intensity of the light if there was no absorption.

I is the intensity with absorption.

L is the absorption path, or the distance the light travels as it is being absorbed.

C is the concentration of the absorbing gas. In the case of the T700, Ozone (O_3).

α is the absorption coefficient that tells how well O_3 absorbs light at the specific wavelength of interest.

To solve this equation for **C**, the concentration of the absorbing Gas (in this case O_3), the application of algebra is required to rearrange the equation as follows:

Equation 10-6

$$C = \ln \frac{I_o}{I} \times \frac{1}{\alpha L} \quad \text{at STP}$$

Unfortunately, both ambient temperature and pressure influence the density of the sample gas and therefore the number of ozone molecules present in the absorption tube thus changing the amount of light absorbed.

In order to account for this effect the following addition is made to the equation:

Equation 10-7

$$C = \ln \frac{I_o}{I} \times \frac{1}{\alpha L} \times \frac{T}{273^{o} K} \times \frac{29.92\, inHg}{P}$$

Where:

T = sample ambient temperature in degrees Kelvin

P = ambient pressure in inches of mercury

Finally, to convert the result into Parts per Billion (PPB), the following change is made:

Equation 10-8

$$C = \ln\frac{I_o}{I} \times \frac{10^9}{\alpha L} \times \frac{T}{273^o K} \times \frac{29.92\, inHg}{P}$$

The T700 photometer:

- Measures each of the above variables: ambient temperature; ambient gas pressure; the intensity of the UV light beam with and without O_3 present;
- Inserts know values for the length of the absorption path and the absorption coefficient, and:
- Calculates the concentration of O_3 present in the sample gas.

10.7.1.2. **The Measurement / Reference Cycle**

In order to solve the Beer-Lambert equation, it is necessary to know the intensity of the light passing through the absorption path both when O_3 is present and when it is not. A valve called the measure/reference valve, physically located on front-left corner of the O_3 generator assembly (see Figure 3-6 and Figure 10-13) alternates the gas stream flowing to the photometer between zero air (diluent gas) and the O_3 output from the O_3 generator. This cycle takes about 6 seconds.

Table 10-2: T700 Photometer Measurement / Reference Cycle

TIME INDEX	STATUS
0 sec.	Measure/Reference Valve Opens to the Measure Path.
0 – 2 sec.	Wait Period. Ensures that the absorption tube has been adequately flushed of any previously present gases.
2 – 3 Seconds	Calibrator measures the average UV light intensity of O_3 bearing Sample Gas (**I**) during this period.
3 sec.	Measure/Reference Valve Opens to the Reference Path.
3 – 5 sec.	Wait Period. Ensures that the absorption tube has been adequately flushed of O_3 bearing gas.
5 – 6 Seconds	Calibrator measures the average UV light intensity of Non-O_3 bearing Sample Gas (**I_0**) during this period.
CYCLE REPEAT EVERY 6 SECONDS	

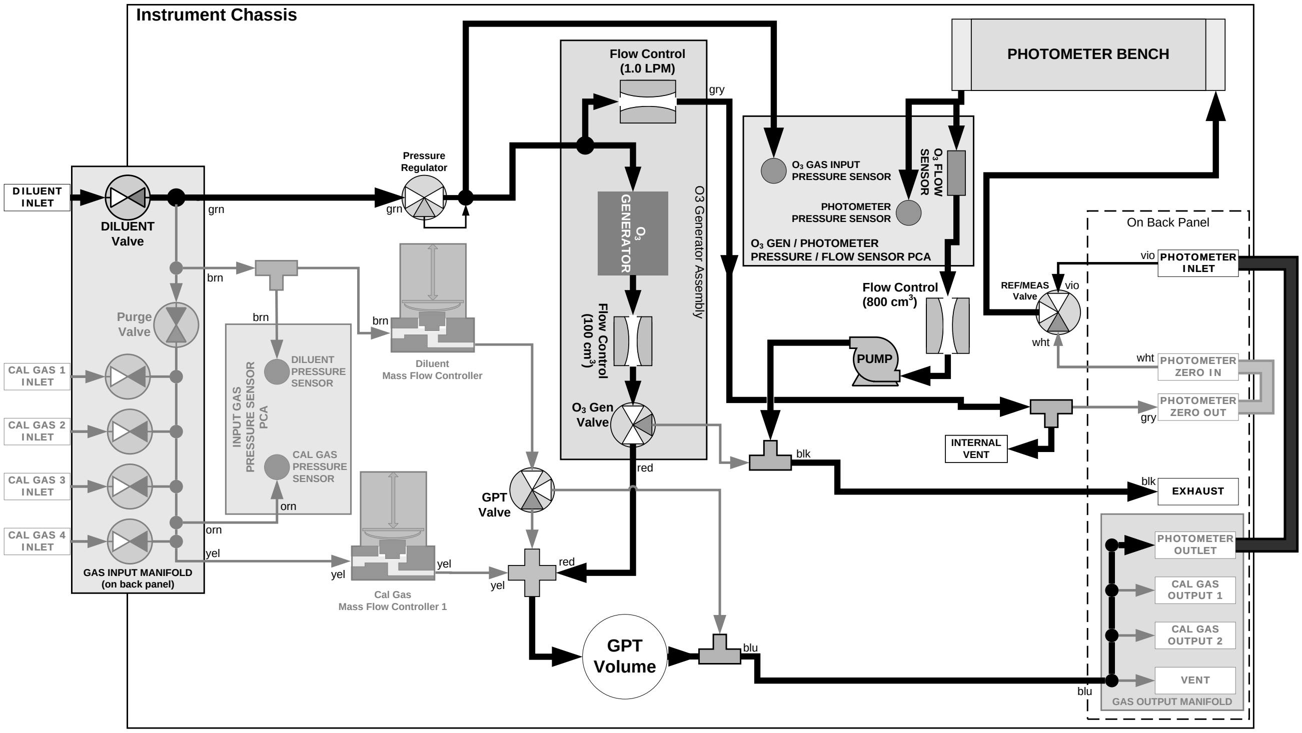
Instrument Chassis
DILUENT INLET
DILUENT Valve
Purge Valve
CAL GAS 1 INLET
CAL GAS 2 INLET
CAL GAS 3 INLET
CAL GAS 4 INLET
GAS INPUT MANIFOLD (on back panel)
grn
brn
orn
yel
INPUT GAS PRESSURE SENSOR PCA
DILUENT PRESSURE SENSOR
CAL GAS PRESSURE SENSOR
Pressure Regulator
Diluent Mass Flow Controller
Cal Gas Mass Flow Controller 1
GPT Valve
GPT Volume
Flow Control (1.0 LPM)
O3 GENERATOR
Flow Control (100 cm3)
O3 Gen Valve
O3 Generator Assembly
gry
red
blu
blk
vio
wht
PHOTOMETER BENCH
O3 GAS INPUT PRESSURE SENSOR
PHOTOMETER PRESSURE SENSOR
O3 FLOW SENSOR
O3 GEN / PHOTOMETER PRESSURE / FLOW SENSOR PCA
Flow Control (800 cm3)
PUMP
INTERNAL VENT
REF/MEAS Valve
On Back Panel
PHOTOMETER INLET
PHOTOMETER ZERO IN
PHOTOMETER ZERO OUT
EXHAUST
PHOTOMETER OUTLET
CAL GAS OUTPUT 1
CAL GAS OUTPUT 2
VENT
GAS OUTPUT MANIFOLD

Figure 10-17: O_3 Photometer Gas Flow – Measure Cycle

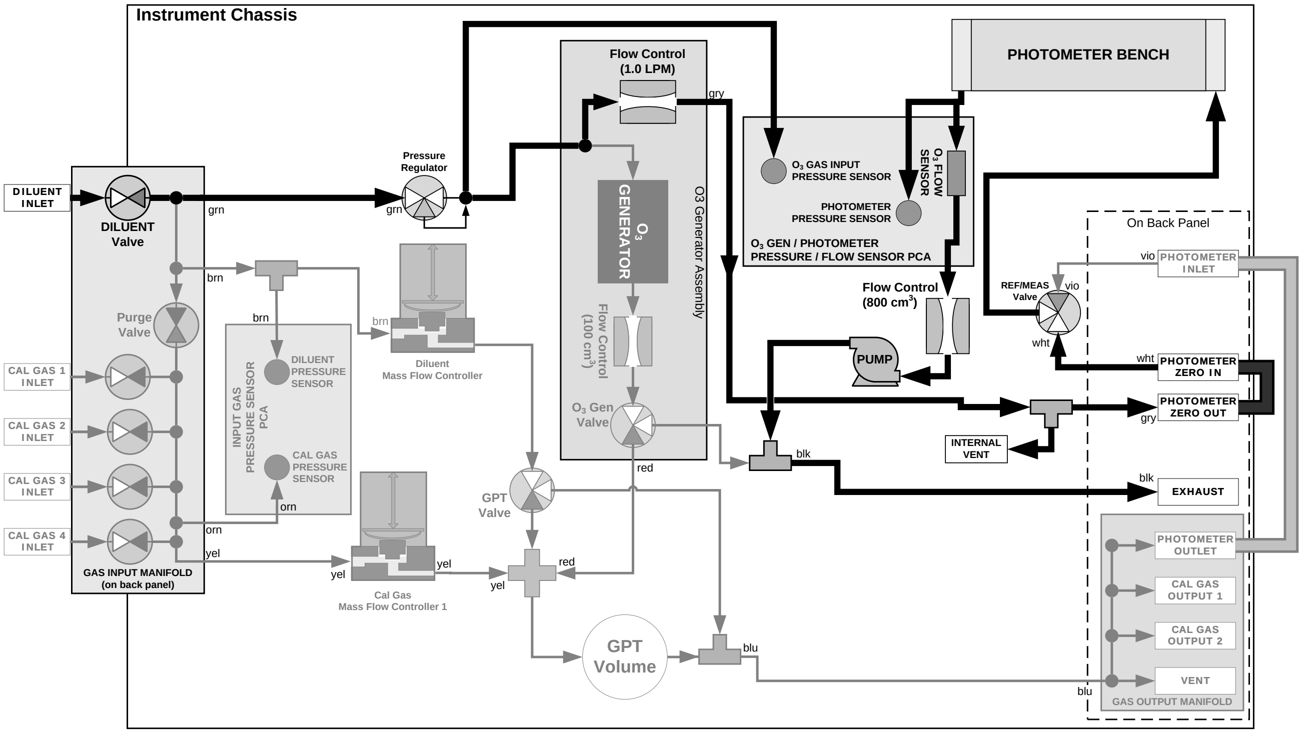
Instrument Chassis
DILUENT INLET
DILUENT Valve
Purge Valve
CAL GAS 1 INLET
CAL GAS 2 INLET
CAL GAS 3 INLET
CAL GAS 4 INLET
GAS INPUT MANIFOLD (on back panel)
grn
brn
orn
yel
INPUT GAS PRESSURE SENSOR PCA
DILUENT PRESSURE SENSOR
CAL GAS PRESSURE SENSOR
Pressure Regulator
Diluent Mass Flow Controller
Cal Gas Mass Flow Controller 1
GPT Valve
GPT Volume
Flow Control (1.0 LPM)
O3 GENERATOR
Flow Control (100 cm3)
O3 Gen Valve
O3 Generator Assembly
gry
red
blu
blk
vio
wht
PHOTOMETER BENCH
O3 GAS INPUT PRESSURE SENSOR
PHOTOMETER PRESSURE SENSOR
O3 FLOW SENSOR
O3 GEN / PHOTOMETER PRESSURE / FLOW SENSOR PCA
Flow Control (800 cm3)
PUMP
INTERNAL VENT
REF/MEAS Valve
On Back Panel
PHOTOMETER INLET
PHOTOMETER ZERO IN
PHOTOMETER ZERO OUT
EXHAUST
PHOTOMETER OUTLET
CAL GAS OUTPUT 1
CAL GAS OUTPUT 2
VENT
GAS OUTPUT MANIFOLD

Figure 10-18: O_3 Photometer Gas Flow – Reference Cycle

10.7.1.3. **The Absorption Path**

In the most basic terms, the T700 photometer uses a high energy, mercury vapor lamp to generate a beam of UV light. This beam passes through a window of material specifically chosen to be both non-reactive to O_3 and transparent to UV radiation at 254nm and into an absorption tube filled with sample gas.

Because ozone is a very efficient absorber of UV radiation the absorption path length required to create a measurable decrease in UV intensity is short enough (approximately 42 cm) that the light beam is only required to make one pass through the Absorption Tube. Therefore, no complex mirror system is needed to lengthen the effective path by bouncing the beam back and forth.

Finally, the UV passes through a similar window at the other end of the absorption tube and is detected by a specially designed vacuum diode that only detects radiation at or very near a wavelength of 254nm. The specificity of the detector is high enough that no extra optical filtering of the UV light is needed.

The detector reacts to the UV light and outputs a current signal that varies in direct relationship with the intensity of the light shining on it. This current signal is amplified and converted to a 0 to 5 VDC voltage analog signal voltage sent to the instrument's motherboard where it is digitized. The CPU to be uses this digital data in computing the concentration of O_3 in the absorption tube.

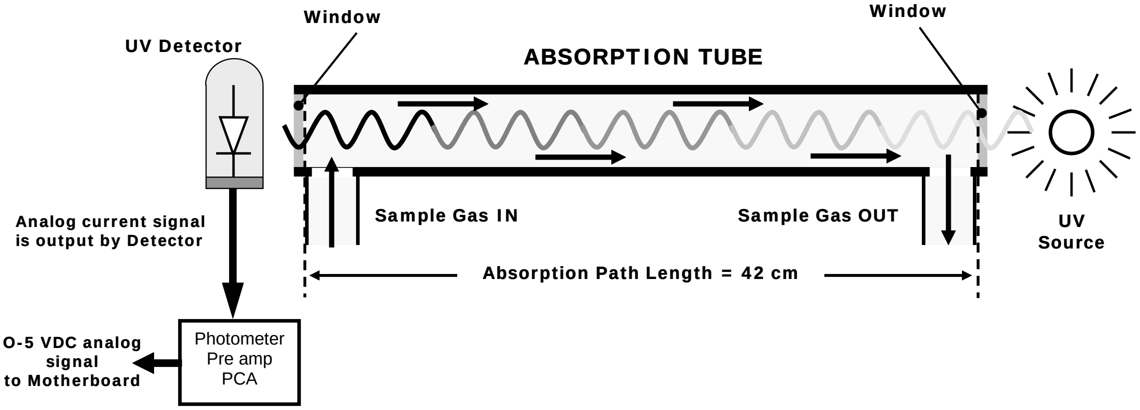
Window
Window
UV Detector
ABSORPTION TUBE
Sample Gas IN
Sample Gas OUT
Analog current signal is output by Detector
UV Source
Absorption Path Length = 42 cm
O-5 VDC analog signal to Motherboard
Photometer Pre amp PCA

Figure 10-19: O_3 Photometer Absorption Path

10.7.1.4. **Interferent Rejection**

It should be noted that the UV absorption method for detecting ozone is subject to interference from a number of sources. The T700's photometer has been successfully tested for its ability to reject interference from sulfur dioxide, nitrogen dioxide, nitric oxide, water, and meta-xylene.

While the photometer rejects interference from the aromatic hydrocarbon meta-xylene, it should be noted that there are a very large number of volatile aromatic hydrocarbons that could potentially interfere with ozone detection. If the T700 calibrator is installed in an environment where high aromatic hydrocarbon concentrations are suspected, specific tests should be conducted to reveal the amount of interference these compounds may be causing.

10.7.2. PHOTOMETER LAYOUT

The photometer is where the absorption of UV light by ozone is measured and converted into a voltage. It consists of several sub-assemblies:

- A mercury-vapor UV lamp. This lamp is coated in a material that optically screens the UV radiation output to remove the O_3 producing 185nm radiation. Only light at 254nm is emitted.
- An AC power supply to supply the current for starting and maintaining the plasma arc of the mercury vapor lamp.
- A thermistor and DC heater attached to the UV Lamp to maintain the Lamp at an optimum operating temperature.
- 42 cm long quartz absorption tube.
- A thermistor attached to the quartz tube for measuring sample gas temperature.
- Gas inlet and outlet mounting blocks that route sample gas into and out of the photometer.
- The vacuum diode, UV detector that converts UV light to a DC current.
- A preamplifier assembly, which convert the Detector's current output into a DC Voltage then amplifies it to a level readable by the A-to-D converter circuitry of the instrument's motherboard.

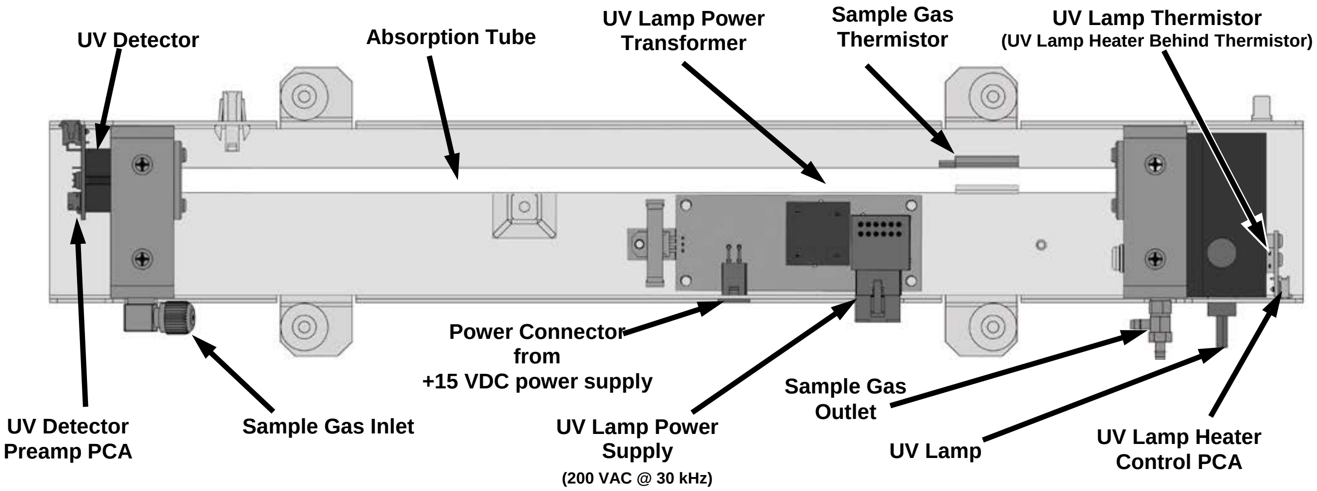
UV Detector
Absorption Tube
UV Lamp Power Transformer
Sample Gas Thermistor
UV Lamp Thermistor
(UV Lamp Heater Behind Thermistor)
Power Connector from +15 VDC power supply
Sample Gas Outlet
UV Detector Preamp PCA
Sample Gas Inlet
UV Lamp Power Supply
(200 VAC @ 30 kHz)
UV Lamp
UV Lamp Heater Control PCA

Figure 10-20: O_3 Photometer Layout – Top Cover Removed

10.7.3. PHOTOMETER PNEUMATIC OPERATION

The flow of gas through the photometer is created by a small internal pump that pulls air though the instrument. There are several advantages to this "pull through" configuration. Placing the pump down stream from the absorption tube avoids problems caused by the pumping process heating and compressing the sample.

In order to measure the presence of low concentrations of O_3 in the sample air, it is necessary to establish and maintain a relatively constant and stable volumetric flow of sample gas through the photometer. The simplest way to accomplish this is by placing a flow control assembly containing a critical flow orifice directly upstream of the pump but down stream from the absorption tube.

The critical flow orifice installed in the pump supply line is tuned to create a flow of 800 cm^3/min. A pressure sensor and a flow sensor, located on the O_3 generator/photometer pressure flow sensor PCA, monitor the pressure and flow rate of the gas passing through the photometers absorption tube.

See Figure 10-17 and Figure 10-18 for depictions of the airflow related to the photometer.

10.7.4. PHOTOMETER ELECTRONIC OPERATION

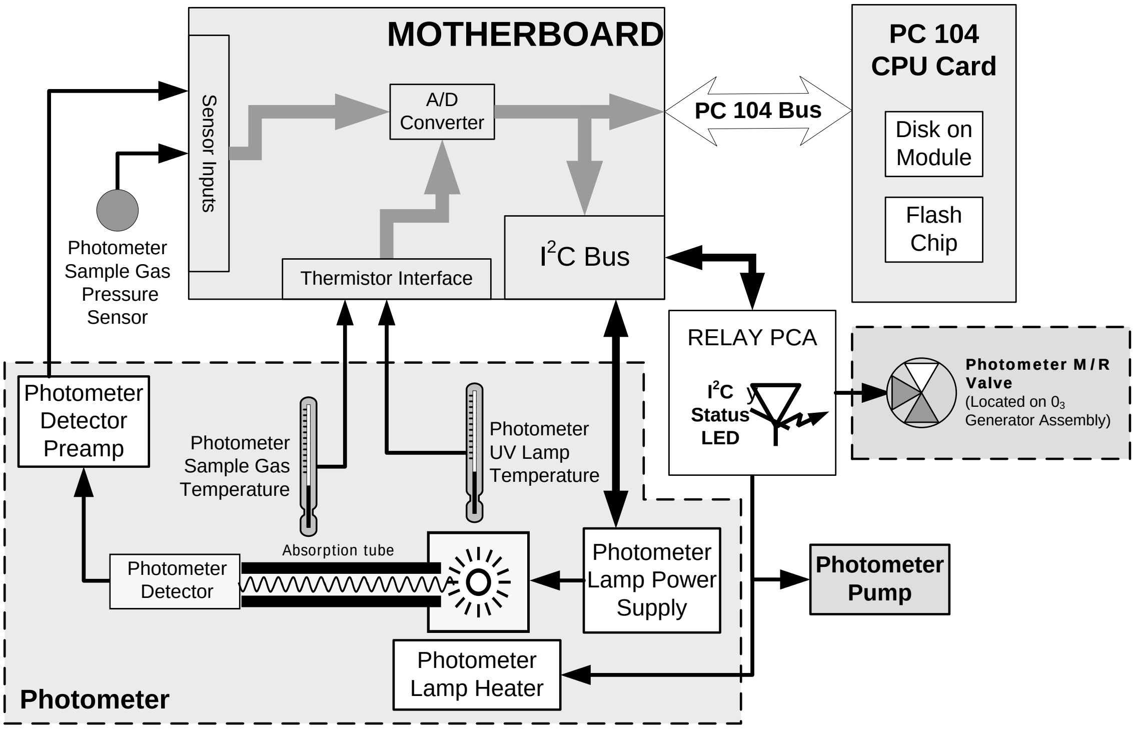
MOTHERBOARD
Sensor Inputs
A/D Converter
Thermistor Interface
I^2C Bus
PC 104 Bus
PC 104 CPU Card
Disk on Module
Flash Chip
RELAY PCA
I^2C Status LED
Photometer M/R Valve (Located on O_3 Generator Assembly)
Photometer Sample Gas Pressure Sensor
Photometer Detector Preamp
Photometer Sample Gas Temperature
Photometer UV Lamp Temperature
Absorption tube
Photometer Detector
Photometer Lamp Power Supply
Photometer Pump
Photometer Lamp Heater
Photometer

Figure 10-21: O_3 Photometer Electronic Block Diagram

Like the O_3 generator, the O_3 photometer and its subcomponents act as peripheral devices operated by the CPU via the motherboard. Communications to and from the CPU are handled by the motherboard.

Outgoing commands for the various devices such as the photometer pump, the UV lamp power supply, or the UV Lamp heater are issued via the I^2C bus to circuitry on the relay PCA which turns them ON/OFF. The CPU also issues commands over the I^2C bus that cause the relay PCA to cycle the measure/reference valve back and forth.

Incoming data from the UV light detector is amplified locally then converted to digital information by the motherboard. Output from the photometers temperature sensors is also amplified and converted to digital data by the motherboard. The O_3 concentration of the sample gas is computed by the CPU using this data (along with gas pressure and flow data received from the T700's pressure sensors.

10.7.4.1. O_3 Photometer Temperature Control

In order to operate at peak efficiency the UV lamp of the T700's O_3 photometer is maintained at a constant 58ºC. This is intentionally set at a temperature higher than the ambient temperature of the T700's operating environment to ensure that local changes in temperature do not affect the UV Lamp. If the lamp temperature falls below 56ºC or rises above 61ºC a warning is issued by the calibrators CPU.

This temperature is controlled as described in the section on the relay PCA (Section 10.3.3.2).

The following TEST functions report these temperatures and are viewable from the instrument's front panel:

- **PHOTOLTEMP -** The temperature of the UV Lamp reported in ºC.
- **PHOTOSTEMP** - The temperature of the Sample gas in the absorption tube reported in ºC.

10.7.4.2. Pneumatic Sensors for the O_3 Photometer

The sensors located on the pneumatic sensor just to the left rear of the O_3 generator assembly measure the absolute pressure and the flow rate of gas inside the photometer's absorption tube. This information is used by the CPU to calculate the O_3 concentration of the sample gas (See Equation 10-7). Both of these measurements are made downstream from the absorption tube but upstream of the pump. A critical flow orifice located between the flow sensor and the pump maintains the gas flow through the photometer at 800 cm^3/min.

The following TEST functions are viewable from the instrument's front panel:

- **PHOTOFLOW** - flow rate of gas through the photometer measured in LPM.
- **PHOTOSPRESS** – pressure of the gas inside the absorption tube. This pressure is reported in inches of mercury-absolute (**in-Hg-A**), i.e. referenced to a vacuum (zero absolute pressure). This is not the same as **PSIG**

.

This page intentionally left blank.

GLOSSARY

Note: Some terms in this glossary may not occur elsewhere in this manual.

Term	Description/Definition
10BaseT	an Ethernet standard that uses twisted ("T") pairs of copper wires to transmit at 10 megabits per second (Mbps)
100BaseT	same as 10BaseT except ten times faster (100 Mbps)
APICOM	name of a remote control program offered by Teledyne-API to its customers
ASSY	*Assembly*
CAS	*Code-Activated Switch*
CD	*Corona Discharge*, a frequently luminous discharge, at the surface of a conductor or between two conductors of the same transmission line, accompanied by ionization of the surrounding atmosphere and often by a power loss
CE	*Converter Efficiency*, the percentage of light energy that is actually converted into electricity
CEM	*Continuous Emission Monitoring*
Chemical formulas that may be included in this document:	
C_{O2}	carbon dioxide
C_3H_8	propane
CH_4	methane
H_2O	water vapor
HC	general abbreviation for hydrocarbon
HNO_3	nitric acid
H_2S	hydrogen sulfide
NO	nitric oxide
NO_2	nitrogen dioxide
NOx	nitrogen oxides, here defined as the sum of NO and NO_2
NOy	nitrogen oxides, often called odd nitrogen: the sum of NOx plus other compounds such as HNO_3 (definitions vary widely and may include nitrate (NO_3), PAN, N_2O and other compounds as well)
NH_3	ammonia
O_2	molecular oxygen
O_3	ozone

Term	Description/Definition
SO_2	sulfur dioxide
cm^3	metric abbreviation for *cubic centimeter* (replaces the obsolete abbreviation "cc")
CPU	*Central Processing Unit*
DAC	*Digital-to-Analog Converter*
DAS	*Data Acquisition System*
DCE	*Data Communication Equipment*
DFU	*Dry Filter Unit*
DHCP	*Dynamic Host Configuration Protocol.* A protocol used by LAN or Internet servers to automatically set up the interface protocols between themselves and any other addressable device connected to the network
DIAG	*Diagnostics*, the diagnostic settings of the analyzer.
DOM	*Disk On Module,* a 44-pin IDE flash drive with up to 256MB storage capacity for instrument's firmware, configuration settings and data
DOS	*Disk Operating System*
DRAM	*Dynamic Random Access Memory*
DR-DOS	*Digital Research DOS*
DTE	*Data Terminal Equipment*
EEPROM	*Electrically Erasable Programmable Read-Only Memory* also referred to as a FLASH chip or drive
ESD	*Electro-Static Discharge*
ETEST	*Electrical Test*
Ethernet	a standardized (IEEE 802.3) computer networking technology for local area networks (LANs), facilitating communication and sharing resources
FEP	*Fluorinated Ethylene Propylene* polymer, one of the polymers that Du Pont markets as *Teflon*®
Flash	non-volatile, solid-state memory
FPI	*Fabry-Perot Interface*: a special light filter typically made of a transparent plate with two reflecting surfaces or two parallel, highly reflective mirrors
GFC	*Gas Filter Correlation*
I^2C bus	a clocked, bi-directional, serial bus for communication between individual analyzer components
IC	*Integrated Circuit*, a modern, semi-conductor circuit that can contain many basic components such as resistors, transistors, capacitors etc in a miniaturized package used in electronic assemblies

Term	Description/Definition
IP	*Internet Protocol*
IZS	*Internal Zero Span*
LAN	*Local Area Network*
LCD	*Liquid Crystal Display*
LED	*Light Emitting Diode*
LPM	*Liters Per Minute*
MFC	*Mass Flow Controller*
M/R	*Measure/Reference*
MOLAR MASS	the mass, expressed in grams, of 1 mole of a specific substance. Conversely, one mole is the amount of the substance needed for the molar mass to be the same number in grams as the atomic mass of that substance. EXAMPLE: The atomic weight of Carbon is 12 therefore the molar mass of Carbon is 12 grams. Conversely, one mole of carbon equals the amount of carbon atoms that weighs 12 grams. Atomic weights can be found on any Periodic Table of Elements.
NDIR	*Non-Dispersive Infrared*
NIST-SRM	*National Institute of Standards and Technology - Standard Reference Material*
PC	*Personal Computer*
PCA	P*rinted Circuit Assembly*, the PCB with electronic components, ready to use
PC/AT	*Personal Computer / Advanced Technology*
PCB	*Printed Circuit Board*, the bare board without electronic component
PFA	*Per-Fluoro-Alkoxy*, an inert polymer; one of the polymers that *Du Pont* markets as *Teflon*®
PLC	*Programmable Logic Controller*, a device that is used to control instruments based on a logic level signal coming from the analyzer
PLD	*Programmable Logic Device*
PLL	*Phase Lock Loop*
PMT	*Photo Multiplier Tube*, a vacuum tube of electrodes that multiply electrons collected and charged to create a detectable current signal
P/N (or PN)	*Part Number*
PSD	*Prevention of Significant Deterioration*
PTFE	*Poly-Tetra-Fluoro-Ethylene*, a very inert polymer material used to handle gases that may react on other surfaces; one of the polymers that *Du Pont* markets as

Term	Description/Definition
	Teflon®
PVC	*Poly Vinyl Chloride*, a polymer used for downstream tubing
Rdg	Reading
RS-232	specification and standard describing a serial communication method between DTE (Data Terminal Equipment) and DCE (Data Circuit-terminating Equipment) devices, using a maximum cable-length of 50 feet
RS-485	specification and standard describing a binary serial communication method among multiple devices at a data rate faster than RS-232 with a much longer distance between the host and the furthest device
SAROAD	*Storage and Retrieval of Aerometric Data*
SLAMS	*State and Local Air Monitoring Network Plan*
SLPM	*Standard Liters Per Minute* of a gas at standard temperature and pressure
STP	*Standard Temperature and Pressure*
TCP/IP	*Transfer Control Protocol / Internet Protocol*, the standard communications protocol for Ethernet devices
TEC	*Thermal Electric Cooler*
TPC	*Temperature/Pressure Compensation*
USB	*Universal Serial Bus*: a standard connection method to establish communication between peripheral devices and a host controller, such as a mouse and/or keyboard and a personal computer or laptop
VARS	*Variables*, the variable settings of the instrument
V-F	*Voltage-to-Frequency*
Z/S	*Zero / Span*

APPENDIX A –Software Documentation, T700, T750, 700E

Software Versions: T-Series 1.1.7; E-Series 7.0.4

APPENDIX A-1: Software Menu Trees

APPENDIX A-2: Setup Variables for Serial I/O

APPENDIX A-3: Warnings and Test Functions

APPENDIX A-4: Signal I/O Definitions

APPENDIX A-5: MODBUS Register Map

APPENDIX A-6: Terminal Command Designators

This page intentionally left blank.

APPENDIX A-1: Software Menu Trees

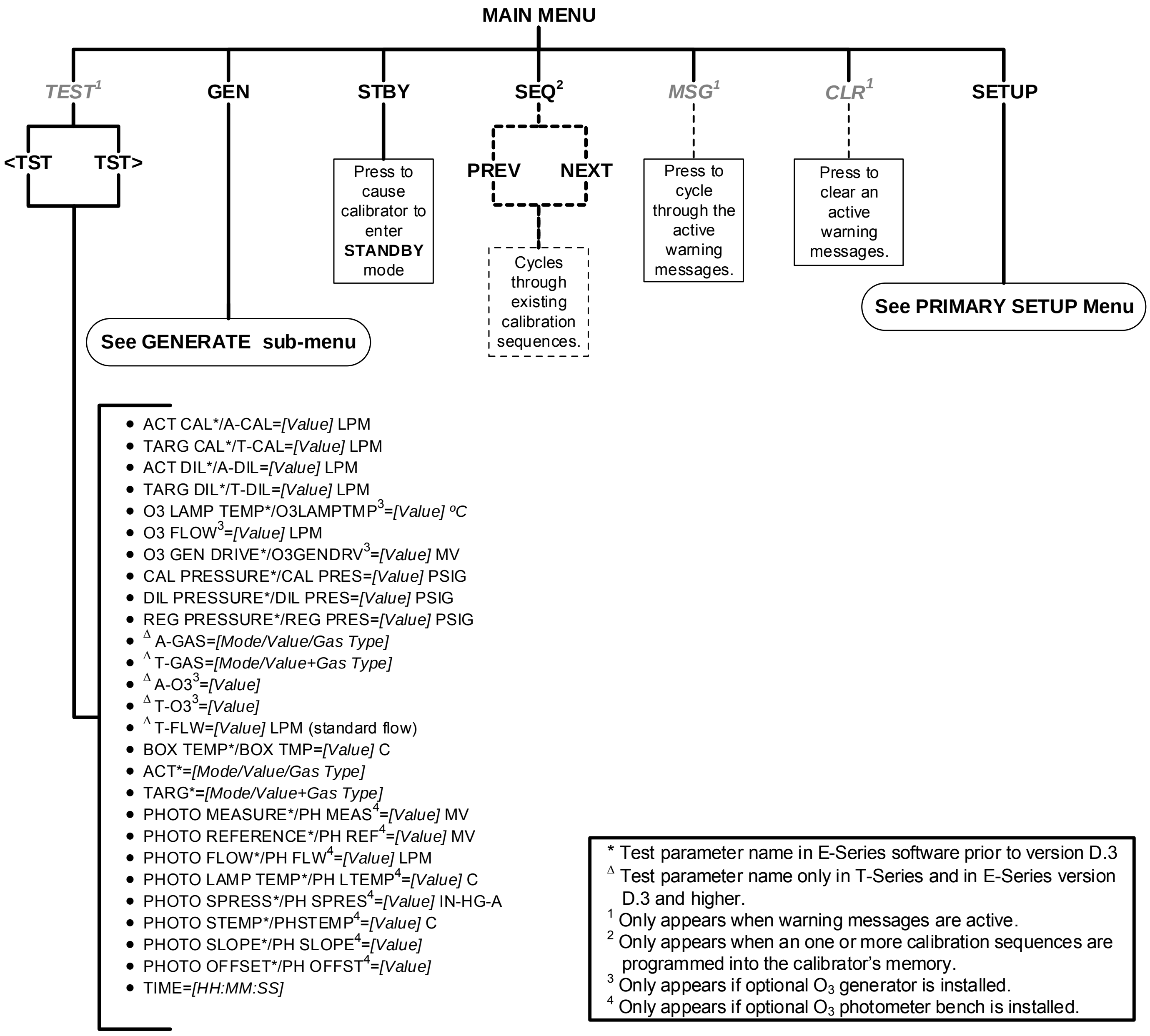
MAIN MENU
TEST[1]
GEN
STBY
SEQ[2]
MSG[1]
CLR[1]
SETUP
<TST
TST>
Press to cause calibrator to enter STANDBY mode
PREV
NEXT
Cycles through existing calibration sequences.
Press to cycle through the active warning messages.
Press to clear an active warning messages.
See PRIMARY SETUP Menu
See GENERATE sub-menu

- ACT CAL*/A-CAL=*[Value]* LPM
- TARG CAL*/T-CAL=*[Value]* LPM
- ACT DIL*/A-DIL=*[Value]* LPM
- TARG DIL*/T-DIL=*[Value]* LPM
- O3 LAMP TEMP*/O3LAMPTMP[3]=*[Value] ºC*
- O3 FLOW[3]=*[Value]* LPM
- O3 GEN DRIVE*/O3GENDRV[3]=*[Value]* MV
- CAL PRESSURE*/CAL PRES=*[Value]* PSIG
- DIL PRESSURE*/DIL PRES=*[Value]* PSIG
- REG PRESSURE*/REG PRES=*[Value]* PSIG
- Δ A-GAS=*[Mode/Value/Gas Type]*
- Δ T-GAS=*[Mode/Value+Gas Type]*
- Δ A-O3[3]=*[Value]*
- Δ T-O3[3]=*[Value]*
- Δ T-FLW=*[Value]* LPM (standard flow)
- BOX TEMP*/BOX TMP=*[Value]* C
- ACT*=*[Mode/Value/Gas Type]*
- TARG*=*[Mode/Value+Gas Type]*
- PHOTO MEASURE*/PH MEAS[4]=*[Value]* MV
- PHOTO REFERENCE*/PH REF[4]=*[Value]* MV
- PHOTO FLOW*/PH FLW[4]=*[Value]* LPM
- PHOTO LAMP TEMP*/PH LTEMP[4]=*[Value]* C
- PHOTO SPRESS*/PH SPRES[4]=*[Value]* IN-HG-A
- PHOTO STEMP*/PHSTEMP[4]=*[Value]* C
- PHOTO SLOPE*/PH SLOPE[4]=*[Value]*
- PHOTO OFFSET*/PH OFFST[4]=*[Value]*
- TIME=*[HH:MM:SS]*

* Test parameter name in E-Series software prior to version D.3
Δ Test parameter name only in T-Series and in E-Series version D.3 and higher.
[1] Only appears when warning messages are active.
[2] Only appears when an one or more calibration sequences are programmed into the calibrator's memory.
[3] Only appears if optional O_3 generator is installed.
[4] Only appears if optional O_3 photometer bench is installed.

Figure A-1a: T700 and 700E Main Menu

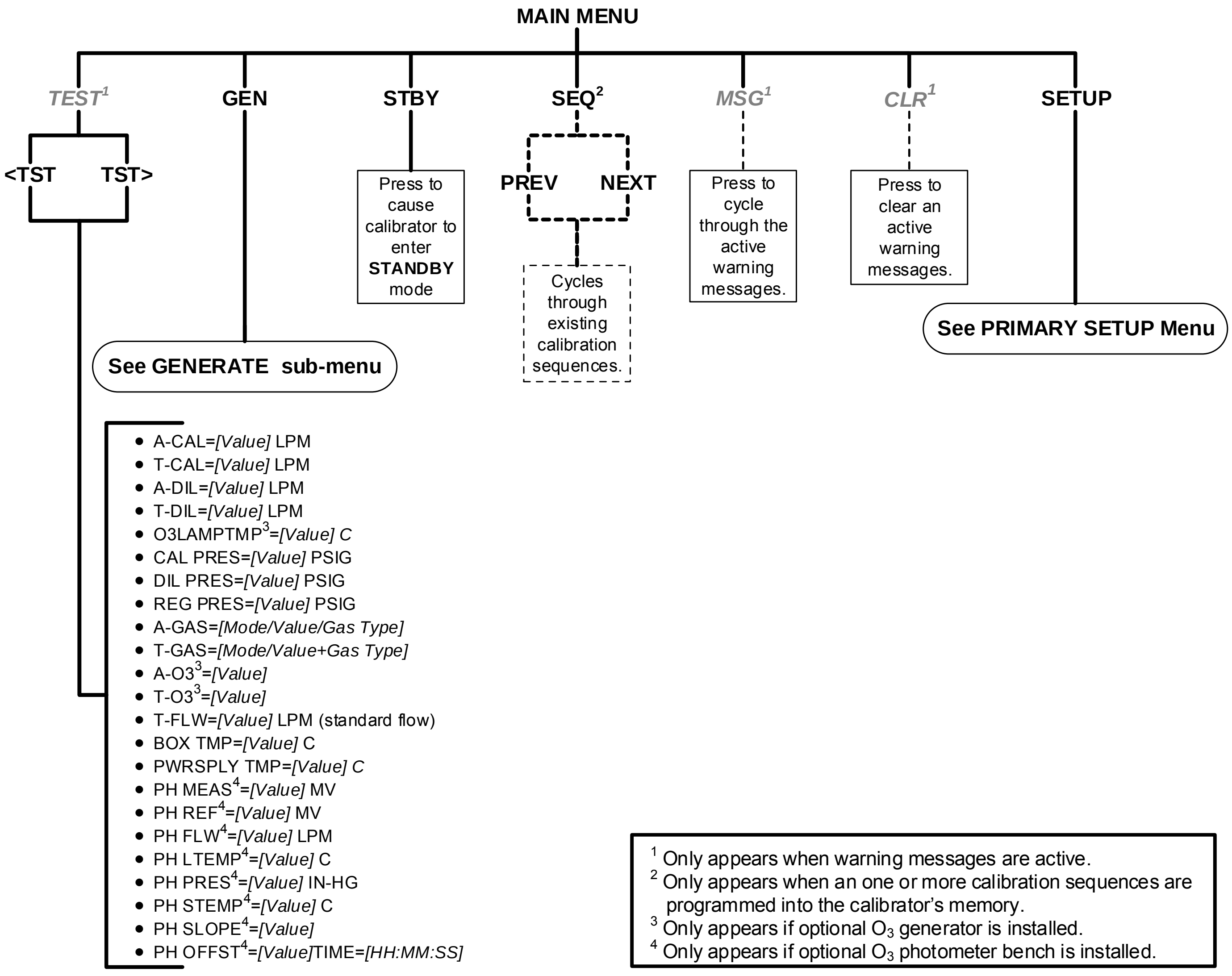
MAIN MENU
TEST[1]
GEN
STBY
SEQ[2]
MSG[1]
CLR[1]
SETUP
<TST
TST>
See GENERATE sub-menu
Press to cause calibrator to enter STANDBY mode
PREV
NEXT
Cycles through existing calibration sequences.
Press to cycle through the active warning messages.
Press to clear an active warning messages.
See PRIMARY SETUP Menu
A-CAL=[Value] LPM
T-CAL=[Value] LPM
A-DIL=[Value] LPM
T-DIL=[Value] LPM
O3LAMPTMP[3]=[Value] C
CAL PRES=[Value] PSIG
DIL PRES=[Value] PSIG
REG PRES=[Value] PSIG
A-GAS=[Mode/Value/Gas Type]
T-GAS=[Mode/Value+Gas Type]
A-O3[3]=[Value]
T-O3[3]=[Value]
T-FLW=[Value] LPM (standard flow)
BOX TMP=[Value] C
PWRSPLY TMP=[Value] C
PH MEAS[4]=[Value] MV
PH REF[4]=[Value] MV
PH FLW[4]=[Value] LPM
PH LTEMP[4]=[Value] C
PH PRES[4]=[Value] IN-HG
PH STEMP[4]=[Value] C
PH SLOPE[4]=[Value]
PH OFFST[4]=[Value]TIME=[HH:MM:SS]
[1] Only appears when warning messages are active.
[2] Only appears when an one or more calibration sequences are programmed into the calibrator's memory.
[3] Only appears if optional O_3 generator is installed.
[4] Only appears if optional O_3 photometer bench is installed.

Figure A-1b: T750 Main Menu

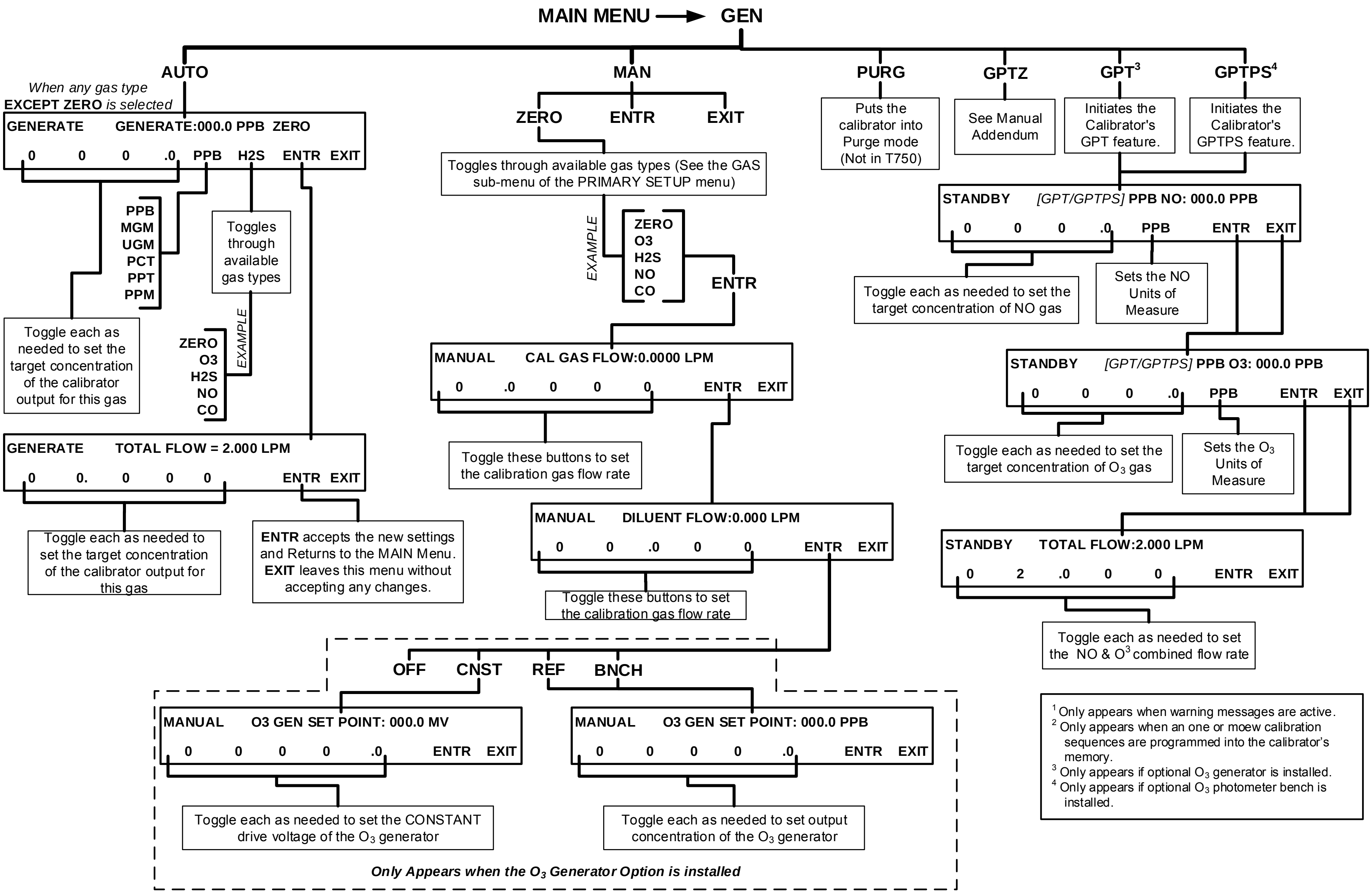
MAIN MENU → GEN
AUTO
MAN
PURG
GPTZ
GPT³
GPTPS⁴
When any gas type EXCEPT ZERO is selected
GENERATE GENERATE:000.0 PPB ZERO
0 0 0 .0 PPB H2S ENTR EXIT
PPB MGM UGM PCT PPT PPM
Toggles through available gas types
EXAMPLE
ZERO O3 H2S NO CO
Toggle each as needed to set the target concentration of the calibrator output for this gas
GENERATE TOTAL FLOW = 2.000 LPM
0 0. 0 0 0 ENTR EXIT
Toggle each as needed to set the target concentration of the calibrator output for this gas
ENTR accepts the new settings and Returns to the MAIN Menu. EXIT leaves this menu without accepting any changes.
ZERO ENTR EXIT
Toggles through available gas types (See the GAS sub-menu of the PRIMARY SETUP menu)
EXAMPLE
ZERO O3 H2S NO CO
ENTR
MANUAL CAL GAS FLOW:0.0000 LPM
0 .0 0 0 0 ENTR EXIT
Toggle these buttons to set the calibration gas flow rate
MANUAL DILUENT FLOW:0.000 LPM
0 0 .0 0 0 ENTR EXIT
Toggle these buttons to set the calibration gas flow rate
OFF CNST REF BNCH
MANUAL O3 GEN SET POINT: 000.0 MV
0 0 0 0 .0 ENTR EXIT
Toggle each as needed to set the CONSTANT drive voltage of the O3 generator
MANUAL O3 GEN SET POINT: 000.0 PPB
0 0 0 0 .0 ENTR EXIT
Toggle each as needed to set output concentration of the O3 generator
Only Appears when the O3 Generator Option is installed
Puts the calibrator into Purge mode (Not in T750)
See Manual Addendum
Initiates the Calibrator's GPT feature.
Initiates the Calibrator's GPTPS feature.
STANDBY [GPT/GPTPS] PPB NO: 000.0 PPB
0 0 0 .0 PPB ENTR EXIT
Toggle each as needed to set the target concentration of NO gas
Sets the NO Units of Measure
STANDBY [GPT/GPTPS] PPB O3: 000.0 PPB
0 0 0 .0 PPB ENTR EXIT
Toggle each as needed to set the target concentration of O3 gas
Sets the O3 Units of Measure
STANDBY TOTAL FLOW:2.000 LPM
0 2 .0 0 0 ENTR EXIT
Toggle each as needed to set the NO & O3 combined flow rate

[1] Only appears when warning messages are active.
[2] Only appears when an one or moew calibration sequences are programmed into the calibrator's memory.
[3] Only appears if optional O_3 generator is installed.
[4] Only appears if optional O_3 photometer bench is installed.

Figure A-2: Main Menu – GEN (GENERATE) Submenu

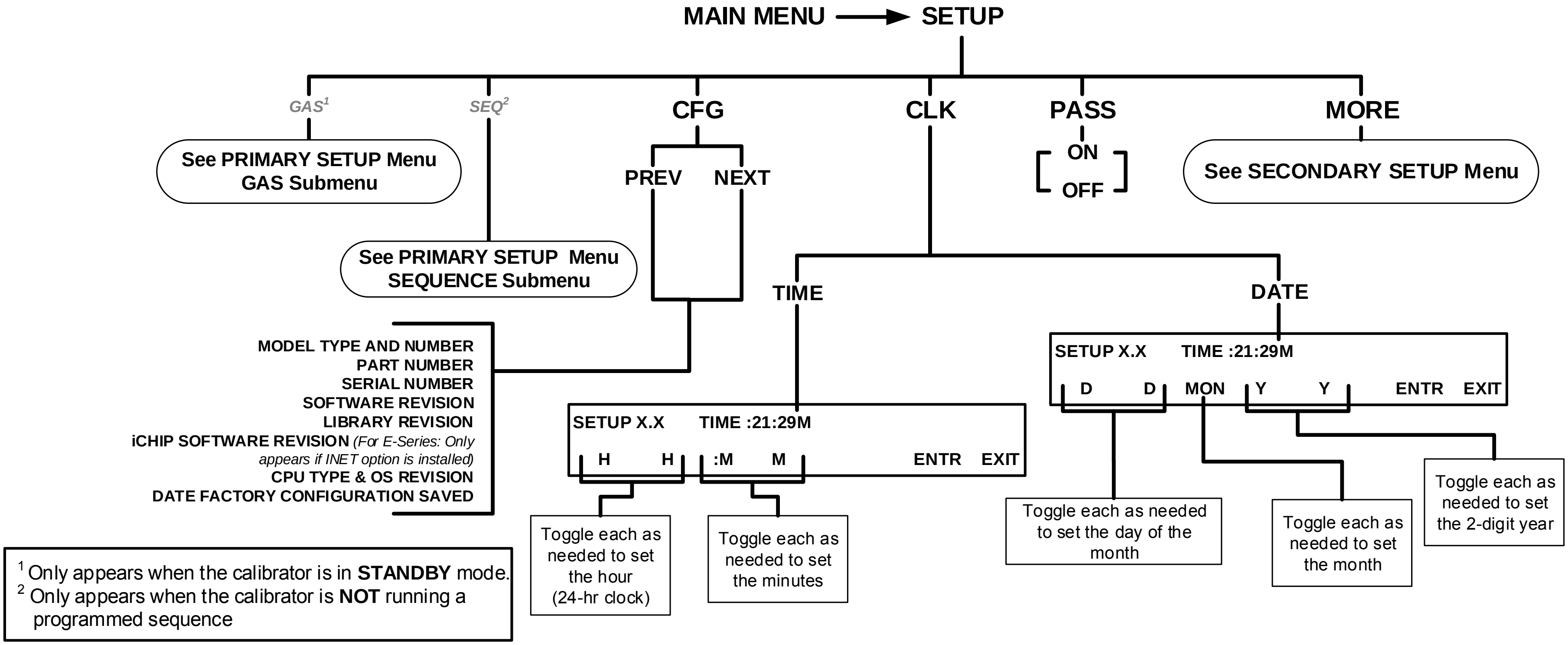
MAIN MENU
SETUP
GAS1
SEQ2
CFG
CLK
PASS
MORE
See PRIMARY SETUP Menu GAS Submenu
See PRIMARY SETUP Menu SEQUENCE Submenu
PREV
NEXT
ON
OFF
See SECONDARY SETUP Menu
TIME
DATE
MODEL TYPE AND NUMBER
PART NUMBER
SERIAL NUMBER
SOFTWARE REVISION
LIBRARY REVISION
iCHIP SOFTWARE REVISION (For E-Series: Only appears if INET option is installed)
CPU TYPE & OS REVISION
DATE FACTORY CONFIGURATION SAVED
SETUP X.X TIME :21:29M
H H :M M ENTR EXIT
Toggle each as needed to set the hour (24-hr clock)
Toggle each as needed to set the minutes
SETUP X.X TIME :21:29M
D D MON Y Y ENTR EXIT
Toggle each as needed to set the day of the month
Toggle each as needed to set the month
Toggle each as needed to set the 2-digit year

[1] Only appears when the calibrator is in **STANDBY** mode.
[2] Only appears when the calibrator is **NOT** running a programmed sequence

Figure A-3: PRIMARY SETUP MENU - Basics

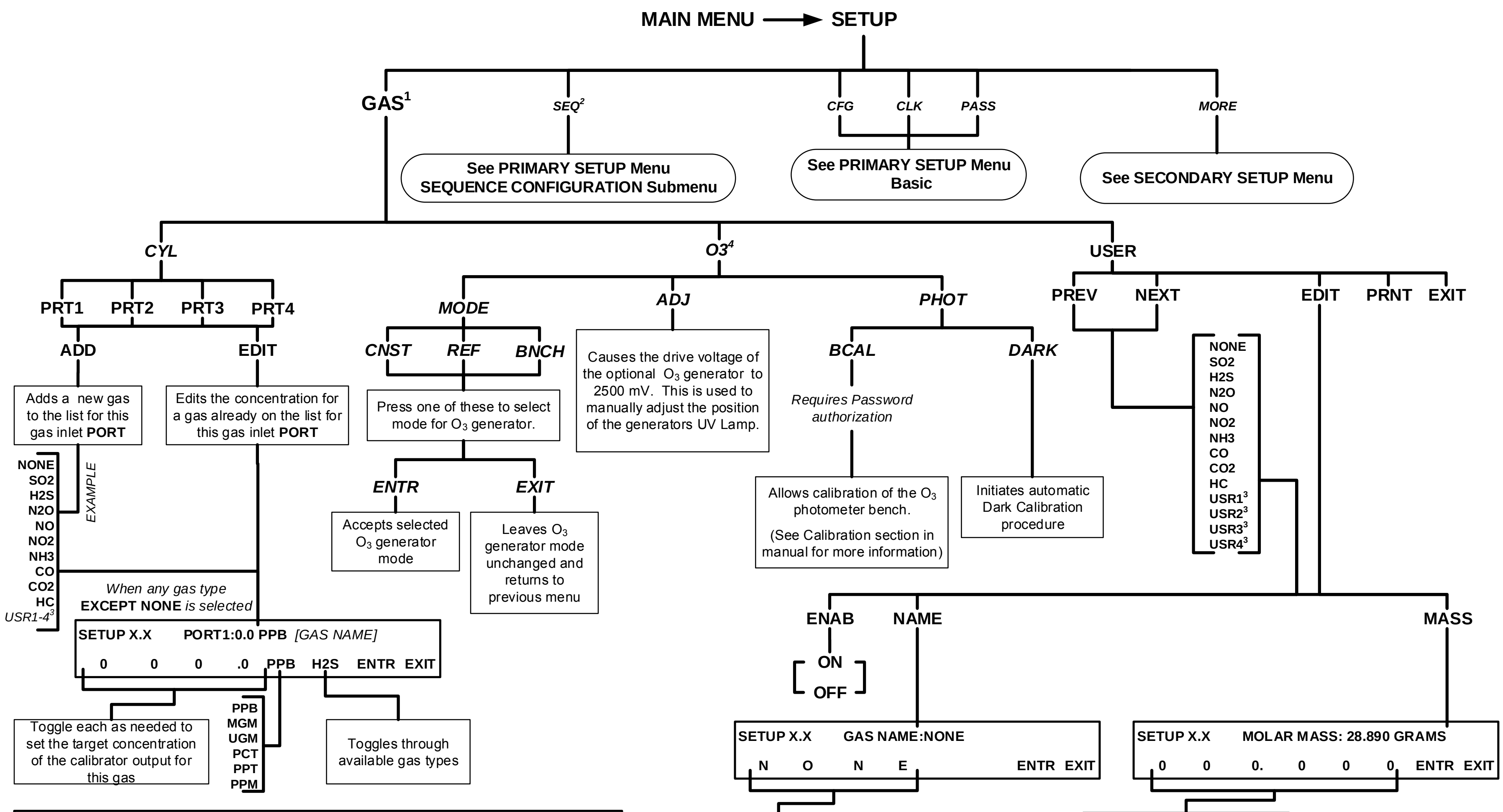
MAIN MENU
SETUP
GAS[1]
SEQ[2]
CFG
CLK
PASS
MORE
See PRIMARY SETUP Menu SEQUENCE CONFIGURATION Submenu
See PRIMARY SETUP Menu Basic
See SECONDARY SETUP Menu
CYL
O3[4]
USER
PRT1
PRT2
PRT3
PRT4
ADD
EDIT
Adds a new gas to the list for this gas inlet PORT
Edits the concentration for a gas already on the list for this gas inlet PORT
NONE
SO2
H2S
N2O
NO
NO2
NH3
CO
CO2
HC
USR1-4[3]
EXAMPLE
When any gas type EXCEPT NONE is selected
SETUP X.X PORT1:0.0 PPB [GAS NAME]
0 0 0 .0 PPB H2S ENTR EXIT
PPB
MGM
UGM
PCT
PPT
PPM
Toggle each as needed to set the target concentration of the calibrator output for this gas
Toggles through available gas types
MODE
CNST
REF
BNCH
Press one of these to select mode for O3 generator.
ENTR
EXIT
Accepts selected O3 generator mode
Leaves O3 generator mode unchanged and returns to previous menu
ADJ
Causes the drive voltage of the optional O3 generator to 2500 mV. This is used to manually adjust the position of the generators UV Lamp.
PHOT
BCAL
DARK
Requires Password authorization
Allows calibration of the O3 photometer bench. (See Calibration section in manual for more information)
Initiates automatic Dark Calibration procedure
PREV
NEXT
EDIT
PRNT
EXIT
NONE
SO2
H2S
N2O
NO
NO2
NH3
CO
CO2
HC
USR1[3]
USR2[3]
USR3[3]
USR4[3]
ENAB
NAME
MASS
ON
OFF
SETUP X.X GAS NAME:NONE
N O N E ENTR EXIT
Toggle each as needed to edit/create a 4 character name for the selected gas
SETUP X.X MOLAR MASS: 28.890 GRAMS
0 0 0. 0 0 0 ENTR EXIT
Toggle each as needed to set the molar mass of the gas

[1] Only appears when the calibrator is in **STANDBY** mode.
[2] Only appears when the calibrator is **NOT** running a programmed sequence
[3] There are four user definable gases available in the T700, M700E (default names USR1; USR2; USR3 & USR4).
[4] Only appears if optional O_3 photometer bench is installed.

Figure A-4: PRIMARY SETUP Menu - GAS Submenu

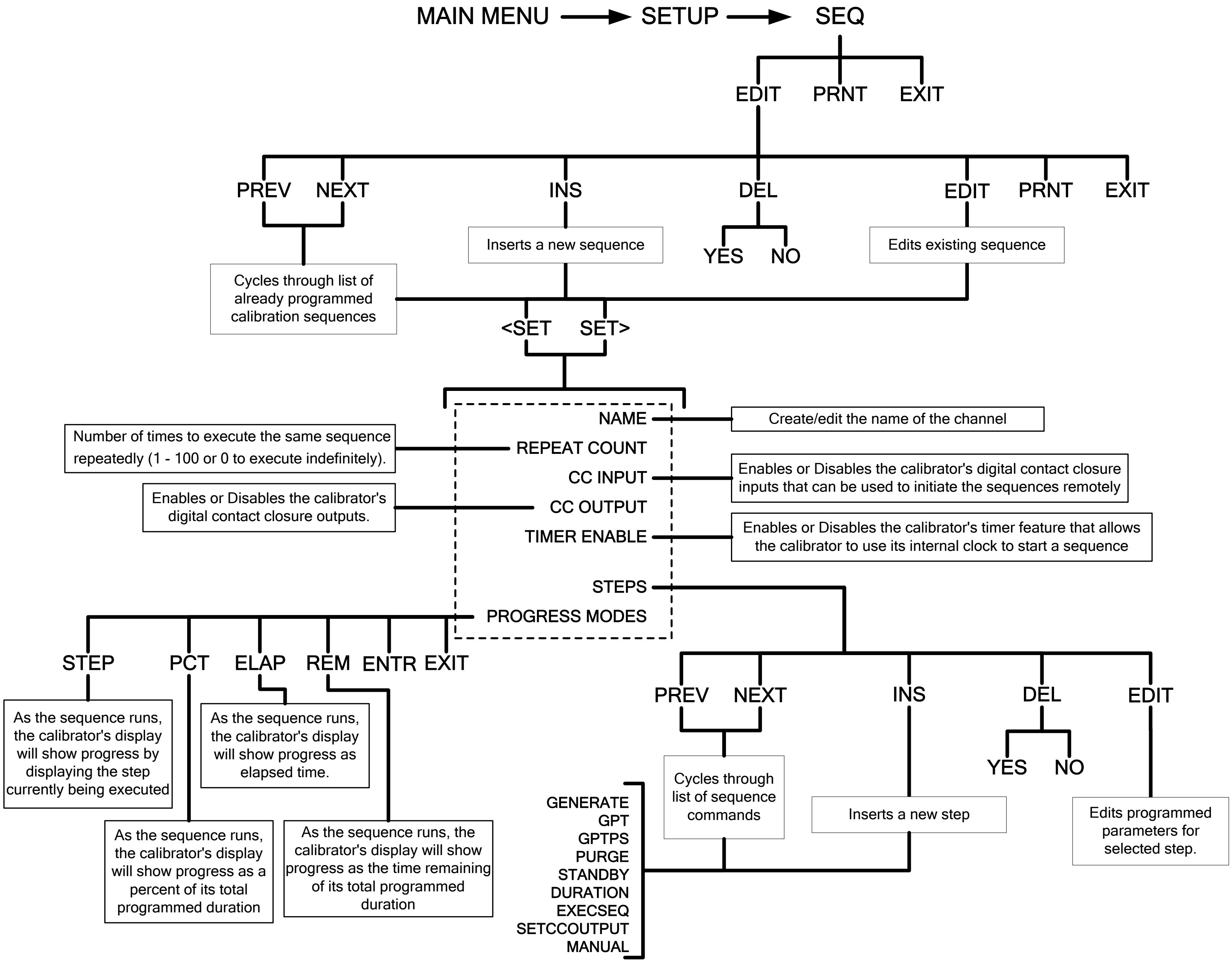
MAIN MENU
SETUP
SEQ
EDIT
PRNT
EXIT
PREV
NEXT
INS
DEL
EDIT
PRNT
EXIT
Inserts a new sequence
YES
NO
Edits existing sequence
Cycles through list of already programmed calibration sequences
<SET
SET>
NAME
Create/edit the name of the channel
Number of times to execute the same sequence repeatedly (1 - 100 or 0 to execute indefinitely).
REPEAT COUNT
CC INPUT
Enables or Disables the calibrator's digital contact closure inputs that can be used to initiate the sequences remotely
Enables or Disables the calibrator's digital contact closure outputs.
CC OUTPUT
TIMER ENABLE
Enables or Disables the calibrator's timer feature that allows the calibrator to use its internal clock to start a sequence
STEPS
PROGRESS MODES
STEP
PCT
ELAP
REM
ENTR
EXIT
As the sequence runs, the calibrator's display will show progress by displaying the step currently being executed
As the sequence runs, the calibrator's display will show progress as elapsed time.
As the sequence runs, the calibrator's display will show progress as a percent of its total programmed duration
As the sequence runs, the calibrator's display will show progress as the time remaining of its total programmed duration
PREV
NEXT
INS
DEL
EDIT
Cycles through list of sequence commands
YES
NO
Inserts a new step
Edits programmed parameters for selected step.
GENERATE
GPT
GPTPS
PURGE
STANDBY
DURATION
EXECSEQ
SETCCOUTPUT
MANUAL

Figure A-5: PRIMARY SETUP Menu - SEQUENCE CONFIGURATION Submenu

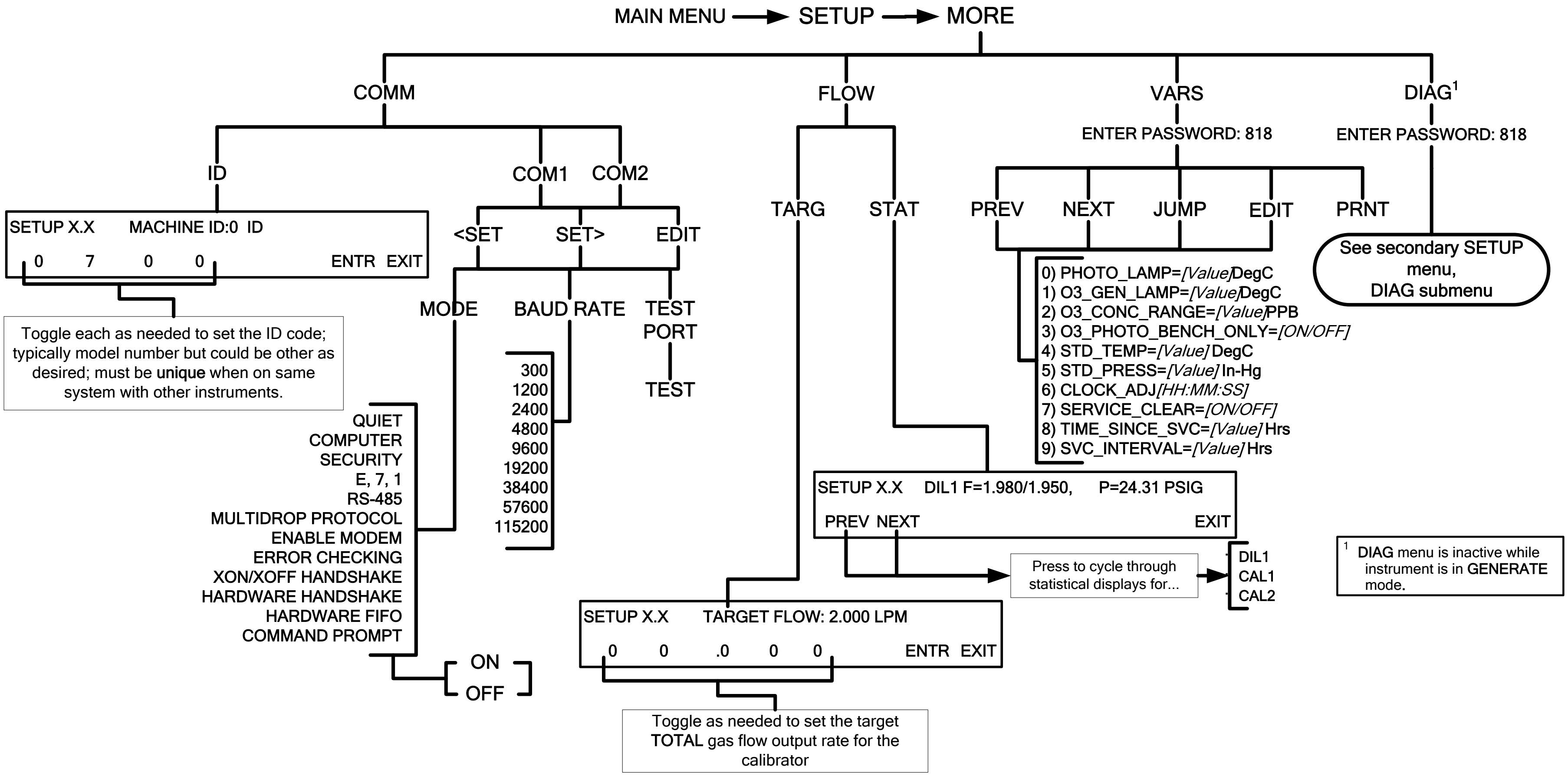
MAIN MENU → SETUP → MORE
COMM
FLOW
VARS
DIAG1
ENTER PASSWORD: 818
ENTER PASSWORD: 818
ID
COM1
COM2
SETUP X.X MACHINE ID:0 ID
0 7 0 0 ENTR EXIT
<SET
SET>
EDIT
MODE
BAUD RATE
TEST PORT
TEST
300
1200
2400
4800
9600
19200
38400
57600
115200
QUIET
COMPUTER
SECURITY
E, 7, 1
RS-485
MULTIDROP PROTOCOL
ENABLE MODEM
ERROR CHECKING
XON/XOFF HANDSHAKE
HARDWARE HANDSHAKE
HARDWARE FIFO
COMMAND PROMPT
ON
OFF
TARG
STAT
SETUP X.X TARGET FLOW: 2.000 LPM
0 0 .0 0 0 ENTR EXIT
SETUP X.X DIL1 F=1.980/1.950, P=24.31 PSIG
PREV NEXT EXIT
DIL1
CAL1
CAL2
PREV
NEXT
JUMP
EDIT
PRNT
0) PHOTO_LAMP=[Value]DegC
1) O3_GEN_LAMP=[Value]DegC
2) O3_CONC_RANGE=[Value]PPB
3) O3_PHOTO_BENCH_ONLY=[ON/OFF]
4) STD_TEMP=[Value] DegC
5) STD_PRESS=[Value] In-Hg
6) CLOCK_ADJ[HH:MM:SS]
7) SERVICE_CLEAR=[ON/OFF]
8) TIME_SINCE_SVC=[Value] Hrs
9) SVC_INTERVAL=[Value] Hrs
See secondary SETUP menu, DIAG submenu

Toggle each as needed to set the ID code; typically model number but could be other as desired; must be **unique** when on same system with other instruments.

Toggle as needed to set the target **TOTAL** gas flow output rate for the calibrator

Press to cycle through statistical displays for...

[1] **DIAG** menu is inactive while instrument is in **GENERATE** mode.

Figure A-6: SECONDARY SETUP Menu - Basic

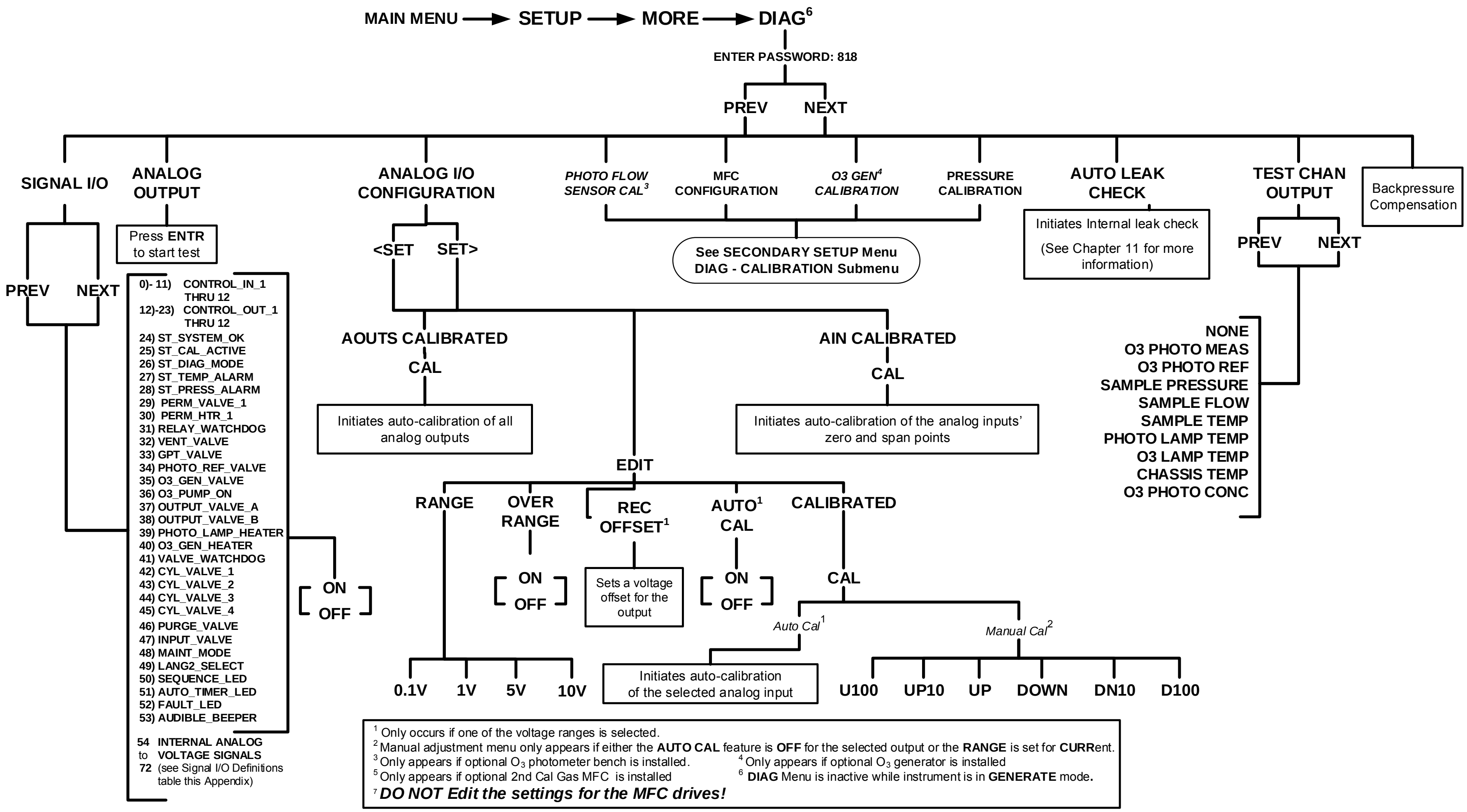
MAIN MENU
SETUP
MORE
DIAG[6]
ENTER PASSWORD: 818
PREV
NEXT
SIGNAL I/O
ANALOG OUTPUT
ANALOG I/O CONFIGURATION
PHOTO FLOW SENSOR CAL[3]
MFC CONFIGURATION
O3 GEN[4] CALIBRATION
PRESSURE CALIBRATION
AUTO LEAK CHECK
TEST CHAN OUTPUT
Backpressure Compensation
PREV
NEXT
Press ENTR to start test
0)- 11) CONTROL_IN_1 THRU 12
12)-23) CONTROL_OUT_1 THRU 12
24) ST_SYSTEM_OK
25) ST_CAL_ACTIVE
26) ST_DIAG_MODE
27) ST_TEMP_ALARM
28) ST_PRESS_ALARM
29) PERM_VALVE_1
30) PERM_HTR_1
31) RELAY_WATCHDOG
32) VENT_VALVE
33) GPT_VALVE
34) PHOTO_REF_VALVE
35) O3_GEN_VALVE
36) O3_PUMP_ON
37) OUTPUT_VALVE_A
38) OUTPUT_VALVE_B
39) PHOTO_LAMP_HEATER
40) O3_GEN_HEATER
41) VALVE_WATCHDOG
42) CYL_VALVE_1
43) CYL_VALVE_2
44) CYL_VALVE_3
45) CYL_VALVE_4
46) PURGE_VALVE
47) INPUT_VALVE
48) MAINT_MODE
49) LANG2_SELECT
50) SEQUENCE_LED
51) AUTO_TIMER_LED
52) FAULT_LED
53) AUDIBLE_BEEPER
54 to 72 INTERNAL ANALOG VOLTAGE SIGNALS (see Signal I/O Definitions table this Appendix)
ON
OFF
<SET
SET>
AOUTS CALIBRATED
CAL
Initiates auto-calibration of all analog outputs
See SECONDARY SETUP Menu DIAG - CALIBRATION Submenu
AIN CALIBRATED
CAL
Initiates auto-calibration of the analog inputs' zero and span points
Initiates Internal leak check
(See Chapter 11 for more information)
PREV
NEXT
NONE
O3 PHOTO MEAS
O3 PHOTO REF
SAMPLE PRESSURE
SAMPLE FLOW
SAMPLE TEMP
PHOTO LAMP TEMP
O3 LAMP TEMP
CHASSIS TEMP
O3 PHOTO CONC
EDIT
RANGE
OVER RANGE
REC OFFSET[1]
AUTO[1] CAL
CALIBRATED
ON
OFF
Sets a voltage offset for the output
ON
OFF
CAL
Auto Cal[1]
Manual Cal[2]
Initiates auto-calibration of the selected analog input
0.1V
1V
5V
10V
U100
UP10
UP
DOWN
DN10
D100

[1] Only occurs if one of the voltage ranges is selected.

[2] Manual adjustment menu only appears if either the **AUTO CAL** feature is **OFF** for the selected output or the **RANGE** is set for **CURR**ent.

[3] Only appears if optional O_3 photometer bench is installed.

[4] Only appears if optional O_3 generator is installed

[5] Only appears if optional 2nd Cal Gas MFC is installed

[6] **DIAG** Menu is inactive while instrument is in **GENERATE** mode.

[7] ***DO NOT Edit the settings for the MFC drives!***

Figure A-7a: T700, 700E SECONDARY SETUP Menu - DIAG Submenu

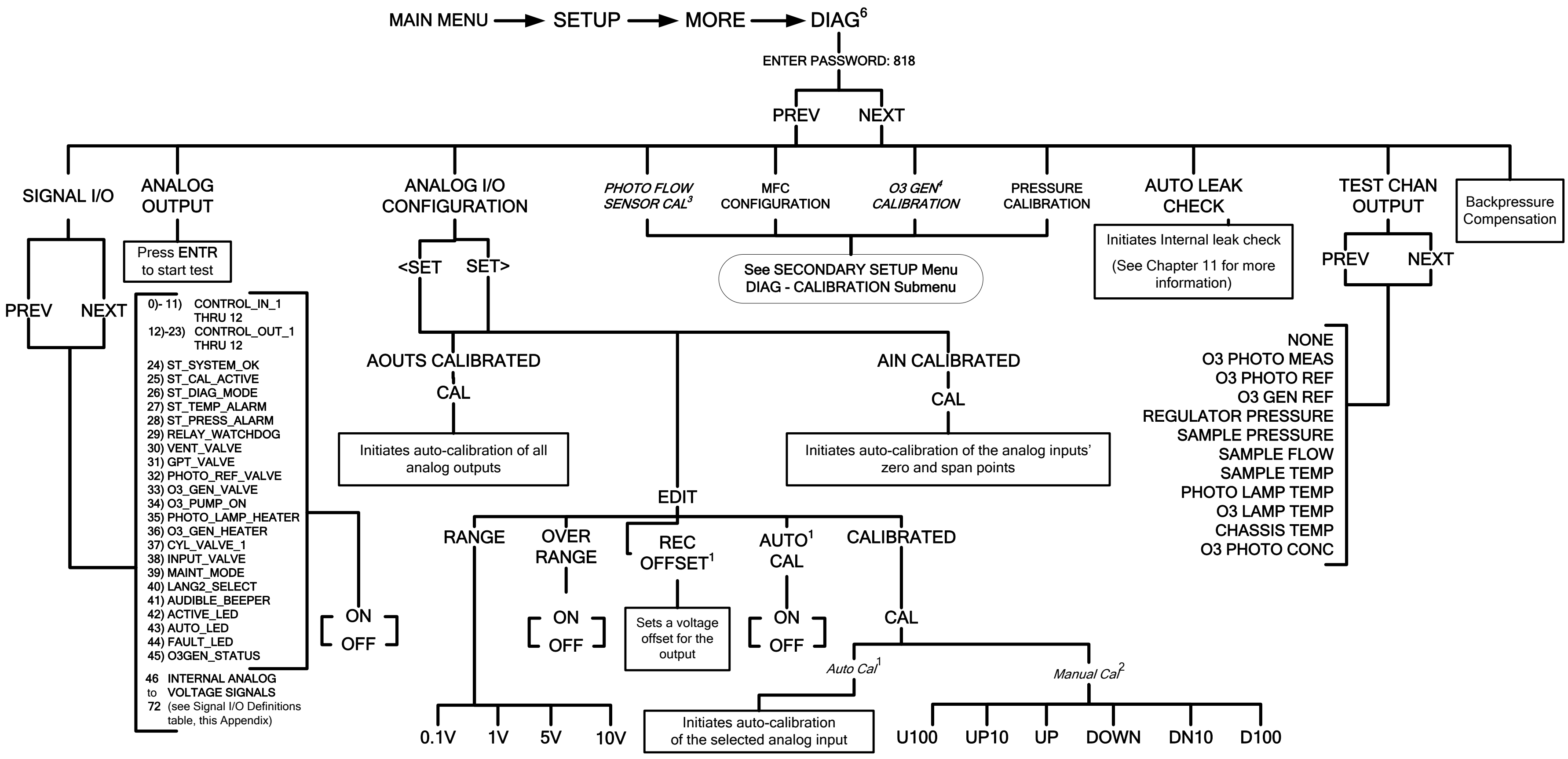
MAIN MENU
SETUP
MORE
DIAG6
ENTER PASSWORD: 818
PREV
NEXT
SIGNAL I/O
PREV
NEXT
0)- 11) CONTROL_IN_1 THRU 12
12)-23) CONTROL_OUT_1 THRU 12
24) ST_SYSTEM_OK
25) ST_CAL_ACTIVE
26) ST_DIAG_MODE
27) ST_TEMP_ALARM
28) ST_PRESS_ALARM
29) RELAY_WATCHDOG
30) VENT_VALVE
31) GPT_VALVE
32) PHOTO_REF_VALVE
33) O3_GEN_VALVE
34) O3_PUMP_ON
35) PHOTO_LAMP_HEATER
36) O3_GEN_HEATER
37) CYL_VALVE_1
38) INPUT_VALVE
39) MAINT_MODE
40) LANG2_SELECT
41) AUDIBLE_BEEPER
42) ACTIVE_LED
43) AUTO_LED
44) FAULT_LED
45) O3GEN_STATUS
46 to 72 INTERNAL ANALOG VOLTAGE SIGNALS (see Signal I/O Definitions table, this Appendix)
ON
OFF
ANALOG OUTPUT
Press ENTR to start test
ANALOG I/O CONFIGURATION
<SET
SET>
AOUTS CALIBRATED
CAL
Initiates auto-calibration of all analog outputs
AIN CALIBRATED
CAL
Initiates auto-calibration of the analog inputs' zero and span points
EDIT
RANGE
0.1V
1V
5V
10V
OVER RANGE
ON
OFF
REC OFFSET1
Sets a voltage offset for the output
AUTO1 CAL
ON
OFF
CALIBRATED
CAL
Auto Cal1
Initiates auto-calibration of the selected analog input
Manual Cal2
U100
UP10
UP
DOWN
DN10
D100
PHOTO FLOW SENSOR CAL3
MFC CONFIGURATION
O3 GEN4 CALIBRATION
PRESSURE CALIBRATION
See SECONDARY SETUP Menu DIAG - CALIBRATION Submenu
AUTO LEAK CHECK
Initiates Internal leak check (See Chapter 11 for more information)
TEST CHAN OUTPUT
PREV
NEXT
NONE
O3 PHOTO MEAS
O3 PHOTO REF
O3 GEN REF
REGULATOR PRESSURE
SAMPLE PRESSURE
SAMPLE FLOW
SAMPLE TEMP
PHOTO LAMP TEMP
O3 LAMP TEMP
CHASSIS TEMP
O3 PHOTO CONC
Backpressure Compensation

[1] Only occurs if one of the voltage ranges is selected.
[2] Manual adjustment menu only appears if either the **AUTO CAL** feature is **OFF** for the selected output or the **RANGE** is set for **CURR**ent.
[3] Only appears if optional O_3 photometer bench is installed.
[4] Only appears if optional O_3 generator is installed
[5] Only appears if optional 2nd Cal Gas MFC is installed
[6] **DIAG** Menu is inactive while instrument is in **GENERATE** mode.
[7] ***DO NOT Edit the settings for the MFC drives!***

Figure A-7b: T750 SECONDARY SETUP Menu - DIAG Submenu

This page intentionally left blank.

APPENDIX A-2: Setup Variables for Serial I/O

Table A-1: Setup Variables

Setup Variable	Numeric Units	Default Value	Value Range	Description
Low Access Level Setup Variables (818 password)				
PHOTO_LAMP	ºC	58 Warnings: 56–61	0–100	Photometer lamp temperature set point and warning limits.
O3_GEN_LAMP	ºC	48 Warnings: 43–53	0–100	O_3 generator lamp temperature set point and warning limits.
O3_CONC_RANGE	PPB	500	0.1–20000	O_3 concentration range for test channel analog output.
O3_PHOTO_BENCH_ONLY	—	ON	OFF, ON	O_3 bench control flag. ON turns on pump and switches measure/reference valve only in bench generation mode.
STD_TEMP	ºC	25	0–100	Standard temperature for unit conversions.
STD_PRESS	"Hg	29.92	15–50	Standard pressure for unit conversions.
CLOCK_ADJ	Sec./Day	0	-60–60	Time-of-day clock speed adjustment.
SERVICE_CLEAR	—	OFF	OFF ON	ON resets the service interval timer.
TIME_SINCE_SVC	Hours	0	0–500000	Time since last service.
SVC_INTERVAL	Hours	0	0–100000	Sets the interval between service reminders.
DRYER_CLEAR [1]	—	OFF	OFF ON	ON resets the dryer service interval timer.

[1] 700H only

APPENDIX A-3: Warnings and Test Functions

Table A-2: Warning Messages

Name [1]	Message Text	Description
WSYSRES	SYSTEM RESET	Instrument was power-cycled or the CPU was reset.
WDATAINIT	DATA INITIALIZED	Data storage was erased.
WCONFIGINIT	CONFIG INITIALIZED	Configuration storage was reset to factory configuration or erased.
WPHOTOLTEMP	PHOTO LAMP TEMP WARNING	Photometer lamp temperature outside of warning limits.
WO3GENTEMP	O3 GEN LAMP TEMP WARNING	O_3 generator lamp temperature outside of warning limits.
WPERMTEMP1 [2]	PERM TUBE #1 TEMP WARNING	Permeation tube #1 temperature outside of warning limits.
WPERMTEMP2 [3]	PERM TUBE #2 TEMP WARNING	Permeation tube #2 temperature outside of warning limits.
WPHOTOREF	PHOTO REFERENCE WARNING	Photometer reference reading less than 2500 mV or greater than 4999 mV.
WLAMPSTABIL	PHOTO LAMP STABILITY WARNING	Photometer lamp reference step changes occur more than 25% of the time.
WREGPRESS	REGULATOR PRESSURE WARNING	Regulator pressure outside of warning limits.
WMFCPRESS	MFC PRESSURE WARNING	Any MFC pressure outside of warning limits.
WMFCFLOW	MFC FLOW WARNING	Any MFC drive less than 10% of full scale or greater than full scale.
WMFCCAL	MFC CALIBRATION WARNING	Any MFC sensor offset greater than allowable limit.
WO3PUMP	O3 PUMP WARNING	O_3 pump failed to turn on within timeout period.
WOUTPUT	INVALID OUTPUT WARNING	An invalid output has been selected for the requested gas generation. For example, output B was selected when generating ozone.
WREARBOARD	REAR BOARD NOT DET	Rear board was not detected during power up.
WRELAYBOARD	RELAY BOARD WARN	Firmware is unable to communicate with the relay board.
WVALVEBOARD	VALVE BOARD WARN	Firmware is unable to communicate with the valve board.
WLAMPDRIVER	LAMP DRIVER WARN	Firmware is unable to communicate with either the O_3 generator or photometer lamp I^2C driver chip.
WFRONTPANEL [4]	FRONT PANEL WARN	Firmware is unable to communicate with the front panel.
WMFCCOMM [5]	MFC COMMUNICATION WARNING	Firmware is unable to communicate with any MFC.
WANALOGCAL	ANALOG CAL WARNING	The A/D or at least one D/A channel has not been calibrated.
WPWRSPLYTEMP [6]	PWR SPLY TEMP WARN	Power supply temperature has exceeded range limits.

[1] The name is used to request a message via the RS-232 interface, as in “T BOXTEMP”
[2] Permeation tube option
[3] Dual permeation tube option
[4] E-Series only
[5] I^2C MFC
[6] T750 only

Table A-3: Test Functions

Name [1]	Message Text	Description
ACTCALFLOW	ACT CAL=0.0800 LPM	Actual cal gas flow rate.
TARGCALFLOW	TARG CAL=0.0000 LPM	Target cal gas flow rate.
ACTDILFLOW	ACT DIL=1.920 LPM	Actual diluent flow rate.
TARGDILFLOW	TARG DIL=0.000 LPM	Target diluent flow rate.
O3GENFRAC [2]	O3 GEN FRAC=0.50	O_3 generator operating flow fraction.
O3GENFLOW	O3 FLOW=0.1050 LPM	O_3 generator flow rate.
O3GENDRIVE	O3 GEN DRIVE=800.0 MV	O_3 generator lamp drive output.
O3GENTEMP	O3 LAMP TEMP=49.7 C	O_3 generator lamp temperature.
CALPRESS	CAL PRESSURE=25.1 PSIG	Cal gas pressure.
DILPRESS	DIL PRESSURE=25.1 PSIG	Diluent pressure.
REGPRESS	REG PRESSURE=20.1 PSIG	Regulator pressure.
ACTCONC	ACT=GENERATE 37 PPB O3	Actual concentration being generated, computed from real-time inputs.
TARGCONC	TAR=GENERATE 100 PPB O3	Target concentration to generate.
BOXTEMP	BOX TEMP=31.2 C	Internal chassis temperature.
PERMTEMP1 [3]	PERM TUBE #1 TEMP=50.4 C	Permeation tube #1 temperature.
PERMTEMP2 [4]	PERM TUBE #2 TEMP=50.4 C	Permeation tube #2 temperature.
PERMFLOW [3]	PERM FLOW=0.1050 LPM	Permeation tube flow rate. This is a property of the permeation tube (SETUP-GAS-PERM). Its value depends on which permeation tube is in use.
PHOTOMEAS	PHOTO MEASURE=2998.8 MV	Photometer detector measure reading.
PHOTOREF	PHOTO REFERENCE=3000.0 MV	Photometer detector reference reading.
PHOTOFLOW	PHOTO FLOW=0.2978 LPM	Photometer sample flow rate.
PHOTOLTEMP	PHOTO LAMP TEMP=52.6 C	Photometer lamp temperature.
PHOTOSPRESS	PHOTO SPRESS=29.9 IN-HG-A	Photometer sample pressure.
PHOTOSTEMP	PHOTO STEMP=31.8 C	Photometer sample temperature.
PHOTOSLOPE	PHOTO SLOPE=1.000	Photometer slope computed during zero/span bench calibration.
PHOTOOFFSET	PHOTO OFFSET=0.0 PPB	Photometer offset computed during zero/span bench calibration.

Name [1]	**Message Text**	**Description**
PHOTOSTABIL [5]	PHOTO STABIL=0.1 PPB	Photometer concentration stability (standard deviation of 25 bench concentration samples taken 10 seconds apart).
TESTCHAN	TEST=2753.9 MV	Value output to TEST_OUTPUT analog output, selected with TEST_CHAN_ID variable.
CLOCKTIME	TIME=14:48:01	Current instrument time of day clock.
PWRSPLYTEMP [6]	PWRSPLY TMP=25.0 C	Power supply temperature.

[1] The name is used to request a message via the RS-232 interface, as in “T BOXTEMP”
[2] Low range option
[3] Permeation tube option
[4] Dual permeation tube option
[5] O_3 photometer stability measurement option
[6] T750 only

APPENDIX A-4: Signal I/O Definitions

Table A-4: Signal I/O Definitions

Signal Name	Bit or Channel Number	Description
U11, J1004, control inputs, pins 1-6 = bits 0-5, read, default I/O address 321 hex		
CONTROL_IN_1 – CONTROL_IN_6	0–5	0 = input asserted 1 = de-asserted
	6–7	Always 1
U14, J1006, control inputs, pins 1-6 = bits 0-5, read, default I/O address 325 hex		
CONTROL_IN_7 – CONTROL_IN_12	0–5	0 = input asserted 1 = de-asserted
	6–7	Always 1
U17, J1008, control outputs, pins 1-8 = bits 0-7, write, default I/O address 321 hex		
CONTROL_OUT_1 – CONTROL_OUT_8	0–7	0 = output asserted 1 = de-asserted
U21, J1008, control outputs, pins 9-12 = bits 0-3, write, default I/O address 325 hex		
CONTROL_OUT_9 – CONTROL_OUT_12	0–3	0 = output asserted 1 = de-asserted
U7, J108, internal inputs, pins 9-16 = bits 0-7, read, default I/O address 322 hex		
	0–7	Spare
U8, J108, internal outputs, pins 1-8 = bits 0-7, write, default I/O address 322 hex		
	0–7	Spare
U24, J1017, A status outputs, pins 1-8 = bits 0-7, write, default I/O address 323 hex		
ST_SYSTEM_OK	0	0 = system OK 1 = any alarm condition or in diagnostics mode
	1	Spare
ST_CAL_ACTIVE	2	0 = executing sequence 1 = not executing sequence
ST_DIAG_MODE	3	0 = in diagnostic mode 1 = not in diagnostic mode
ST_TEMP_ALARM	4	0 = any temperature alarm 1 = all temperatures OK
ST_PRESS_ALARM	5	0 = any pressure alarm 1 = all pressures OK
	6–7	Spare
U27, J1018, B status outputs, pins 1-8 = bits 0-7, write, default I/O address 324 hex		
	0–7	Spare

Signal Name	Bit or Channel Number	Description
Relay board digital output (PCF8575), write, default I^2C address 44 hex		
RELAY_WATCHDOG	0	Alternate between 0 and 1 at least every 5 seconds to keep relay board active
VENT_VALVE	1	0 = vent valve open 1 = close
PERM_HTR_2 [2, 7]	2	0 = permeation tube #2 heater on 1 = off
	3–4	Spare
GPT_VALVE	5	0 = open GPT bypass valve 1 = close
PHOTO_REF_VALVE	6	0 = photometer valve in reference position 1 = measure position
O3_GEN_VALVE	7	0 = open O_3 generator valve 1 = close
O3_PUMP_ON	8	0 = pump on for photometer to measure O_3 1 = off
O3_DIVERT_VALVE [7]	9	0 = open O_3 divert valve 1 = close
OUTPUT_VALVE_B [1, 7]	10	0 = open output shut-off valve B 1 = close
PERM_VALVE_1 [6, 7]	11	0 = open permeation tube #1 valve 1 = close
PERM_VALVE_2 [2, 7]	12	0 = open permeation tube #2 valve 1 = close
PERM_HTR_1 [6, 7]	13	0 = permeation tube #1 heater on 1 = off
PHOTO_LAMP_HEATER	14	0 = O_3 photometer lamp heater on 1 = off
O3_GEN_HEATER	15	0 = O_3 generator lamp heater on 1 = off

Signal Name	Bit or Channel Number	Description
Valve board digital output (PCA9557), write, default I^2C address 3A hex		
VALVE_WATCHDOG [7]	0	Alternate between 0 and 1 at least every 5 seconds to keep valve board active
CYL_VALVE_1	1	1 = open cylinder gas valve 1 0 = close
CYL_VALVE_2 [7]	2	1 = open cylinder gas valve 2 0 = close
CYL_VALVE_3 [7]	3	1 = open cylinder gas valve 3 0 = close
CYL_VALVE_4 [7]	4	1 = open cylinder gas valve 4 0 = close
PURGE_VALVE [7]	5	1 = open purge valve 0 = close
INPUT_VALVE	6	1 = open input (zero-air) shut-off valve 0 = close
DIL_VALVE_2 [5, 7]	7	1 = open diluent valve #2 0 = open diluent valve #1
Front panel I^2C keyboard, default I^2C address 4E hex		
MAINT_MODE	5 (input)	0 = maintenance mode 1 = normal mode
LANG2_SELECT	6 (input)	0 = select second language 1 = select first language (English)
SEQUENCE_LED [7]	8 (output)	0 = sequence LED on (executing sequence) 1 = off
AUTO_TIMER_LED	9 (output)	0 = automatic timer LED on (automatic sequence timer enabled) 1 = off
FAULT_LED	10 (output)	0 = fault LED on 1 = off
AUDIBLE_BEEPER	14 (output)	0 = beeper on (for diagnostic testing only) 1 = off

Signal Name	Bit or Channel Number	Description
Rear board primary MUX analog inputs		
PHOTO_DET	0	Photometer detector reading
N/A	1	N/A
DIL_PRESS	2	Diluent pressure
CAL_PRESS	3	Cal. gas pressure
	4	Temperature MUX
O3_PERM_PRESS	5	Ozone/perm tube pressure
	6–7	Spare
MFC_FLOW_3 [4]	8	MFC 3 (cal. gas #2) flow output
REF_4096_MV	9	4.096V reference from MAX6241
PHOTO_FLOW	10	Photometer flow
PHOTO_SAMP_PRES	11	Photometer sample pressure
MFC_FLOW_1	12	MFC 1 (diluent) flow output
MFC_FLOW_2	13	MFC 2 (cal. gas #1) flow output
	14	DAC loopback MUX
REF_GND	15	Ground reference
Rear board temperature MUX analog inputs		
BOX_TEMP	0	Internal box temperature
PHOTO_SAMP_TEMP	1	Photometer sample temperature
PHOTO_LAMP_TEMP	2	Photometer lamp temperature
O3_GEN_TEMP	3	O_3 generator lamp temperature
PERM_TEMP_1 [6]	4	Permeation tube #1 temperature
PERM_TEMP_2 [2]	5	Permeation tube #2 temperature
PWR_SPLY_TEMP [8]	6	Power supply temperature.
	7	Spare
Rear board DAC MUX analog inputs		
DAC_CHAN_1	0	DAC channel 0 loopback
DAC_CHAN_2	1	DAC channel 1 loopback
DAC_CHAN_3	2	DAC channel 2 loopback
DAC_CHAN_4	3	DAC channel 3 loopback
Rear board analog outputs		
MFC_DRIVE_1	0	MFC 1 (diluent) flow drive
MFC_DRIVE_2	1	MFC 2 (cal. gas #1) flow drive
MFC_DRIVE_3 [4]	2	MFC 3 (cal. gas #2) flow drive
TEST_OUTPUT	3	Test measurement output

Signal Name	Bit or Channel Number	Description
I^2C analog output (AD5321), default I^2C address 18 hex		
PHOTO_LAMP_DRIVE	0	O_3 photometer lamp drive (0–5V)
I^2C analog output (AD5321), default I^2C address 1A hex		
O3_GEN_DRIVE	0	O_3 generator lamp drive (0–5V)

[1] Must be enabled with a factory option bit.

[2] Dual permeation tube option.

[4] Triple-MFC option.

[5] Dual diluent option.

[6] Permeation tube option.

[7] Not present on T750 Portable.

[8] T750 portable only

APPENDIX A-5: MODBUS Register Map

MODBUS Register Address (dec., 0-based)	Description	Units
MODBUS Floating Point Input Registers (32-bit IEEE 754 format; read in high-word, low-word order; read-only)		
0	Actual cal. gas flow rate	LPM
2	Actual diluent flow rate	LPM
4	Photometer measured ozone concentration	PPB
6	N/A	—
8	Ozone generator flow rate	LPM
10	Ozone generator lamp drive	mV
12	Ozone generator lamp temperature	°C
14	Cal. gas pressure	PSIG
16	Diluent pressure	PSIG
18	Regulator pressure	PSIG
20	Internal box temperature	°C
22	Permeation tube #1 temperature [3]	°C
24	Permeation tube flow rate [3]	LPM
26	Photometer detector measure reading	mV
28	Photometer detector reference reading	mV
30	Photometer sample flow rate	LPM
32	Photometer lamp temperature	°C
34	Photometer sample pressure	Inches Hg
36	Photometer sample temperature	°C
38	Photometer slope computed during zero/span bench calibration	—
40	Photometer offset computed during zero/span bench calibration	PPB
42	Ground reference	mV
44	Precision 4.096 mV reference	mV
46	Permeation tube #2 temperature [1]	°C
48	Ozone Gen Fraction [2]	—

MODBUS Register Address (dec., 0-based)	Description	Units
MODBUS Discrete Input Registers (single-bit; read-only)		
0	System reset warning	
1	Box temperature warning	
2	Photometer lamp temperature warning	
3	O_3 generator lamp temperature warning	
4	Permeation tube #1 temperature warning [3]	
5	Photometer reference warning	
6	Photometer lamp stability warning	
7	N/A	
8	Regulator pressure warning	
9	Any MFC pressure outside of warning limits	
10	Any MFC drive less than 10% of full scale or greater than full scale	
11	Any MFC sensor offset greater than allowable limit	
12	Rear board communication warning	
13	Relay board communication warning	
14	Valve board communication warning	
15	O_3 generator or photometer lamp I^2C driver chip communication warning	
16	Front panel communication warning	
17	Firmware is unable to communicate with any MFC	
18	Analog calibration warning	
19	System is OK (same meaning as *SYSTEM_OK* I/O signal)	
20	O_3 generator not yet stabilized	
21	Permeation tube #2 temperature warning [1]	
MODBUS Coil Registers (single-bit; read/write)		
00-99	Trigger execution of sequence whose name begins with “00” - “99”. Turning a coil on executes a sequence. Turning a coil off does nothing. When reading coils, the value indicates which sequence is executing. If a coil is on, the sequence is executing; if off the sequence is not executing. Supports nested sequences, so multiple sequence coils may be on simultaneously.	
100	Turning coil on turns on purge. Turning coil off does nothing. When reading coil, the value indicates whether purge is active. If on, purge is active; if off, purge is not active. Purge may be invoked within a sequence, so purge coil may be on at the same time as a sequence coil.	
101	Turning coil on puts instrument in standby. Turning coil off does nothing. When reading coil, the value indicates whether instrument is in standby mode. If on, instrument is in standby; if off, instrument is not in standby.	
200-211	Connected to the control outputs (CONTROL_OUT_1– CONTROL_OUT_12). These coils may be turned both on and off. Reading the coils indicates the current state.	

[1] Dual permeation tube option.

[2] Low range option.

[3] Permeation tube option.

APPENDIX A-6: Terminal Command Designators

Table A-5: Terminal Command Designators

COMMAND	ADDITIONAL COMMAND SYNTAX	DESCRIPTION
? [ID]		Display help screen and commands list
LOGON [ID]	password	Establish connection to instrument
LOGOFF [ID]		Terminate connection to instrument
T [ID]	SET ALL|name|hexmask	Display test(s)
	LIST [ALL|name|hexmask] [NAMES|HEX]	Print test(s) to screen
	name	Print single test
	CLEAR ALL|name|hexmask	Disable test(s)
W [ID]	SET ALL|name|hexmask	Display warning(s)
	LIST [ALL|name|hexmask] [NAMES|HEX]	Print warning(s)
	name	Clear single warning
	CLEAR ALL|name|hexmask	Clear warning(s)
C [ID]	ZERO|LOWSPAN|SPAN [1|2]	Enter calibration mode
	ASEQ number	Execute automatic sequence
	COMPUTE ZERO|SPAN	Compute new slope/offset
	EXIT	Exit calibration mode
	ABORT	Abort calibration sequence
D [ID]	LIST	Print all I/O signals
	name[=value]	Examine or set I/O signal
	LIST NAMES	Print names of all diagnostic tests
	ENTER name	Execute diagnostic test
	EXIT	Exit diagnostic test
	RESET [DATA] [CONFIG] [exitcode]	Reset instrument
V [ID]	LIST	Print setup variables
	name[=value [warn_low [warn_high]]]	Modify variable
	name="value"	Modify enumerated variable
	CONFIG	Print instrument configuration
	MAINT ON|OFF	Enter/exit maintenance mode
	MODE	Print current instrument mode

The command syntax follows the command type, separated by a space character. Strings in [brackets] are optional designators. The following key assignments also apply.

Table A-6: Terminal Key Assignments

TERMINAL KEY ASSIGNMENTS	
ESC	Abort line
CR (ENTER)	Execute command
Ctrl-C	Switch to computer mode
COMPUTER MODE KEY ASSIGNMENTS	
LF (line feed)	Execute command
Ctrl-T	Switch to terminal mode

APPENDIX B - Spare Parts

Note **Use of replacement parts other than those supplied by T-API may result in non compliance with European standard EN 61010-1.**

Note **Due to the dynamic nature of part numbers, please refer to the Website or call Customer Service for more recent updates to part numbers.**

This page intentionally left blank.

T700 Spare Parts List

PN 06852B DCN6014 03/10/2011

1 of 3 page(s)

Part Number	Description
000940100	ORIFICE, 3 MIL, 03 GEN
003290000	THERMISTOR, BASIC (VENDOR ASSY)(KB)
006120100	ASSY, UV LAMP, OZONE GENERATOR
014540300	CONTROLLER, MFC, HFC-212, 100SCCM *
014550300	CONTROLLER, MFC, HFC-212, 10 SLM *
014570100	ASSY, INLET MANIFOLD, (KB)
014900000	ASSY, GPT
016590100	ASSY, GPT VALVE
022710000	ABSORPTION TUBE, QUARTZ, (KB)
024710000	ASSY, TUBING, CLEAR FEP 1/8" (TU1), 6FT
024720000	ASSY, TUBING, (B/F) TU0000002, 6FT
024730000	ASSY, TUBING, TU0000005, 6FT
024750000	ASSY, TYGON TUBING (B/F) TU0000009, 6FT
040010000	ASSY, FAN REAR PANEL
040030500	PCA, PRESS SENSORS (2X)
040030600	PCA, PRESS SENSORS (1X), OZONE OPT
041200000	PCA, DET PREAMP w/OP20
041200200	PCA, DET PREAMP w/OP20
041240001	MANIFOLD, DETECTOR, (KB)
041270000	LAMP BLOCK, (KB)
041280000	LAMP SPACER, (KB)
041300000	EXAUST MANIFOLD, (KB)
041440000	PCA, DC HEATER/TEMP SENSOR, OPTICAL BENCH
042010000	ASSY, SAMPLE THERMISTOR
045230100	PCA, RELAY CARD
046740000	ASSY, PUMP, 12VDC (OP63)
048190300	ASSY, RELAY/PS, CAL
049290000	CLIP, THERMISTOR HOLDER
050490000	ASSY, O3 GENERATOR W/BRKT & REG
050500000	ASSY, O3 GENERATOR, 5LPM
052400000	ASSY, BENCH UV LAMP, (BIR), CR *
052910200	ASSY, OPTICAL BENCH, CAL
054690000	PCA, VALVE DRIVER, M700E
055020000	ASSY, INLET MANIFOLD W/PCA
055210000	OPTION, PHOTOMETER
055220000	ASSY, VALVE, PHOTOMETER
055240000	OPTION, OZONE, CAL (KB)
055270000	ASSY, EXHAUST MANIFOLD, (KB)
055560000	ASSY, VALVE, VA59 W/DIODE, 5" LEADS
056440000	ASSY, VALVE (VA23)
056450000	ASSY, VALVE (VA32)
056970000	PCA, EXT O/P ADPTR, LDS, (OPT)
057230000	PCA, SINGLE VALVE DRIVER (OPTION)
057360000	ASSY, 3/8" VENT ADAPTER

T700 Spare Parts List

PN 06852B DCN6014 03/10/2011
2 of 3 page(s)

Part Number	Description
057400001	FRONT FERRULE,SS,1/4",SILCOSTEEL
057520001	FRONT FERRULE,SS, 1/8",SILCOSTEEL
057630000	ASSY, DUAL OUTPUT VALVE
058021400	PCA, E-SERIES MTHRBRD, M700E, GEN 5-I (ACCEPTS ACROSSER OR ICOP CPU)
058430001	FT 40 FITTING BODY, SILCOSTEEL COATED
058440001	FT 36 FITTING BODY, SILCOSTEEL COATED
060340001	FT 85 FITTING BODY, SILCOSTEEL COATED
061630000	ASSY, FILTER, DFU, DESORBER (SOAKED)
063110000	PCA, DC HEATER/THERM, 100W
064130000	ASSY, DC HEATER/THERM PCA, O3 GEN
066970000	PCA, INTRF. LCD TOUCH SCRN, F/P
067240000	CPU, PC-104, VSX-6154E, ICOP *(KB)
067300000	PCA, AUX-I/O BD, ETHERNET, ANALOG & USB
067300100	PCA, AUX-I/O BOARD, ETHERNET
067300200	PCA, AUX-I/O BOARD, ETHERNET & USB
067900000	LCD MODULE, W/TOUCHSCREEN(KB)
068290100	DOM, w/SOFTWARE, STD, T700 *
068730000	MANUAL, T700, OPERATORS
068810000	PCA, LVDS TRANSMITTER BOARD
069500000	PCA, SERIAL & VIDEO INTERFACE BOARD
072150000	ASSY. TOUCHSCREEN CONTROL MODULE
CN0000073	POWER ENTRY, 120/60 (KB)
CN0000458	CONNECTOR, REAR PANEL, 12 PIN
CN0000520	CONNECTOR, REAR PANEL, 10 PIN
CN0000640	CONNECTOR, REAR PANEL, 14 PIN
FM0000004	FLOWMETER (KB)
FM0000007	REGULATOR, PRESSURE, 0-30PSI(KB)
FT0000013	CONNECTOR-M, T, 1/8" (KB)
FT0000036	TEE-TTT, SS, 1/4" (HK)
FT0000040	UNION, BULKHEAD, SS, 1/4" (HK)
FT0000056	TEE-TTT, SS, 1/8" (HK)
FT0000085	PORT CONNECTOR, SS, 1/4" (HK)
FT0000134	BLKHD, UNION, REDUCING, SS, 1/4-1/8 (HK
FT0000151	UNION, CROSS, TFE, 2-1/4", 2-1/8" KB
FT0000192	ELBOW, B, 1/8 X 1/4 TUBING
FT0000278	FEMALE COUPLING, 10-32, BRASS
FT0000279	HEX EXTENSION, B, 10-32 M-F
FT0000321	PORT CONNECTOR, SS, 1/8" (HK)
FT0000332	FITTING, 9 MIL, ZERO AIR FLOW
FT0000364	.003 ORIFICE, 10-32 X 10-32 W/ORING, BRA
FT0000429	ORIFICE, BARB, SS, 0.012"
HW0000005	FOOT
HW0000120	SHOCKMOUNT, GROMMET ISOLATOR
HW0000149	SEALING WASHER, #10
HW0000327	HEATSINK CLIP, TO-220
HW0000328	INSULATING THERMAL PAD, TO-220

T700 Spare Parts List

PN 06852B DCN6014 03/10/2011

3 of 3 page(s)

Part Number	Description
HW0000356	PAD, THERMAL, TO-220, W/ ADHV
HW0000453	SUPPORT, CIRCUIT BD, 3/16" ICOP
KIT000253	ASSY & TEST, SPARE PS37
KIT000289	AKIT, UV LAMP P/S PCA, 041660100
KIT000290	AKIT, UV LAMP P/S PCA, 041660500
OP0000014	LAMP WINDOW, OPTICAL BENCH
OP0000031	WINDOW, OPTICAL BENCH & OZONE GEN FEEDBACK
OR0000001	ORING, SAMPLE FLOW & OZONE GENERATOR
OR0000026	ORING, ABSORPTION TUBE
OR0000039	ORING, OPTICAL BENCH & OZONE GEN FEEDBACK
OR0000046	ORING, 2-019V
OR0000077	ORING, 2-018V
OR0000089	ORING, OPTICAL BENCH
PS0000037	PS, 40W SWITCHING, +5V, +/-15V(KB) *
PS0000039	PS, SWITCHING, 12V/7.5A (KB)
PS0000040	PS,EXT,AC/DC (90-264V/47-63HZ),12V/3.75A
SW0000025	SWITCH, POWER, CIRC BREAK, VDE/CE *(KB)
WR0000008	POWER CORD, 10A(KB)

This page intentionally left blank.

Appendix C
Warranty/Repair Questionnaire
T700, M700E
(05625D DCN7095)

TELEDYNE
ADVANCED POLLUTION INSTRUMENTATION
Everywhereyoulook™

CUSTOMER: ______________________________ PHONE: ______________________________

CONTACT NAME: __________________________ FAX NO. ______________________________

SITE ADDRESS: ____

MODEL TYPE: ______________ SERIAL NO.: ________________ FIRMWARE REVISION: ____________

Are there any failure messages? ____

____ *(Continue on back if necessary)*

PLEASE COMPLETE THE FOLLOWING TABLE (Depending on options installed, not all test parameters shown will be available in your calibrator):

PARAMETER		**RECORDED VALUE**	**ACCEPTABLE VALUE**
Name in E-Series software versions prior to v.C.1.	Name in T-Series and in E-series w/software v. D.3 and higher		
ACT CAL	A-CAL	LPM*	TARG CAL ± 1%
TARG CAL	T-CAL	LPM*	0.001 – 0.100 SLPM
ACT DIL	A-DIL	LPM*	TARG DIL ± 1%
TARG DIL	T-DIL	LPM*	0.01 – 10 SLPM
O3 GEN REF [1]	O3GENREF [1]	mV	0 – 5000mV
O3 FLOW [1]	O3FLOW [1]	LPM*	0.100 ± 0.025 SLPM
O3 GEN DRIVE [1]	O3GENDRV [1]	mV	0 – 5000mV
O3 LAMP TEMP [1]	O3LAMPTMP [1]	ºC	48 ± 1ºC
CAL PRESSURE	CAL PRES	PSI	25 – 35PSI
DIL PRESSURE	DIL PRES	PSI	25 – 35PSI
REG PRESSURE [1]	REG PRES [1]	PSI	20 ± 1PSI
ACT	(n/a)		TARG ± 1%
(n/a)	A-GAS		T-GAS ± 1%
(n/a)	T-GAS		
(n/a)	A-O3 [1]		T-O3 ± 1%
(n/a)	T-O3 [1]		
TARG	(n/a)		
(n/a)	T-FLW	LPM*	
BOX TEMP	BOX TMP	ºC	AMBIENT ± 5ºC
PERM TUBE #1 TEMP [2]	PERM1 TMP [2]	ºC	50 ± 1ºC
PERM FLOW [2]	PERM FLW [2]	LPM*	0.100 ± 0.025 SLPM
PHOTO MEASURE [1]	PH MEAS [1]	mV	2500 – 4800mV
PHOTO REFERENCE [1]	PH REF [1]	mV	2500 – 4800mV
PHOTO FLOW [1]	PH FLW [1]	LPM	0.720 – 0.880LPM
PHOTO LAMP TEMP [1]	PH LTEMP [1]	ºC	58 ± 1ºC
PHOTO SPRESS [1]	PH PRES [1]	IN-HG	~ 1 IN-HG < AMBIENT
PHOTO STEMP [1]	PH STEMP [1]	ºC	AMBIENT ± 3ºC
PHOTO SLOPE [1]	PH SLOPE [1]		0.85-1.15
PHOTO OFFSET [1]	PH OFFST [1]	PPB	0 ±10 PPB

[1] If respective option installed. [2] If permeation tube installed. *Standard flow

TELEDYNE API TECHNICAL SUPPORT
Email: SDA_techsupport@teledyne.com
PHONE: (858) 657-9800 TOLL FREE: (800) 324-5190 FAX: (858) 657-9816

Appendix C
Warranty/Repair Questionnaire
T700, M700E
(05625D DCN7095)

TELEDYNE
ADVANCED POLLUTION INSTRUMENTATION
Everywhereyoulook™

What is measured photometer flow rate ____cc/min

What is measured O_3 generator flow rate? ____________________________________cc/min

What is the pressure change during the **AUTO LEAK CHECK** procedure? ___________________psi

What are the failure symptoms? ____

____

____

____

What tests have you done trying to solve the problem? ______________________________

____

____

____

____

Thank you for providing this information. Your assistance enables Teledyne API to respond faster to the problem that you are encountering.

OTHER NOTES: ____

____

____

____

____

____

____

____

____

____

____

____

____

____

____

____

APPENDIX D – Wire List and Electronic Schematics

This page intentionally left blank.

Interconnect List T700

(Reference: 069140100A DCN5870)

Revision	Description					Checked	Date	DCN	
A	Production Release					KV	10/4/2010	5870	
		CONNECTION FROM				CONNECTION TO			
Cable Part #	Signal	Assembly	PN	J/P	Pin	Assembly	PN	J/P	Pin
036490100	**CBL, AC POWER**								
	AC Line	Power Entry	CN0000073		L	Power Switch	SW0000025		L
	AC Neutral	Power Entry	CN0000073		N	Power Switch	SW0000025		N
	Power Grnd	Power Entry	CN0000073			Shield	SW0000025		
	Power Grnd	Power Entry	CN0000073			Chassis			
	AC Line Switched	Power Switch	SW0000025		L	PS2 (+12)	PS0000039	J1	1
	AC Neutral Switched	Power Switch	SW0000025		N	PS2 (+12)	PS0000039	J1	3
	Power Grnd	Power Entry	CN0000073			PS2 (+12)	PS0000039	J1	2
	AC Line Switched	Power Switch	SW0000025		L	PS1 (+5, ±15)	PS0000037	J1	1
	AC Neutral Switched	Power Switch	SW0000025		N	PS1 (+5, ±15)	PS0000037	J1	3
	Power Grnd	Power Entry	CN0000073			PS1 (+5, ±15)	PS0000037	J1	2
	AC Line Switched	Power Switch	SW0000025		L	Relay Board	045230100	J1	1
	AC Neutral Switched	Power Switch	SW0000025		N	Relay Board	045230100	J1	3
	Power Grnd	Power Entry	CN0000073			Relay Board	045230100	J1	2
038290000	**CBL, DC POWER TO MOTHERBOARD**								
	DGND	Relay Board	045230100	J7	1	Motherboard	058021400	J15	1
	+5V	Relay Board	045230100	J7	2	Motherboard	058021400	J15	2
	AGND	Relay Board	045230100	J7	3	Motherboard	058021400	J15	3
	+15V	Relay Board	045230100	J7	4	Motherboard	058021400	J15	4
	AGND	Relay Board	045230100	J7	5	Motherboard	058021400	J15	5
	-15V	Relay Board	045230100	J7	6	Motherboard	058021400	J15	6
	+12V RET	Relay Board	045230100	J7	7	Motherboard	058021400	J15	7
	+12V	Relay Board	045230100	J7	8	Motherboard	058021400	J15	8
	Chassis Gnd	Relay Board	045230100	J7	10	Motherboard	058021400	J15	9
041050000	**CBL, KEYBOARD TO MOTHERBOARD**								
	Kbd Interupt	LCD Interface Bd	066970000	J1	7	Motherboard	058021400	J106	1
	DGND	LCD Interface Bd	066970000	J1	2	Motherboard	058021400	J106	8
	SDA	LCD Interface Bd	066970000	J1	5	Motherboard	058021400	J106	2
	SCL	LCD Interface Bd	066970000	J1	6	Motherboard	058021400	J106	6
	Shld	LCD Interface Bd	066970000	J1	10	Motherboard	058021400	J106	5
041760100	**CBL, DC POWER, TYPE 2**								
	DGND	Relay Board	045230100	J8	1	PS1 (+5, ±15)	PS0000037	J2	3
	+5V	Relay Board	045230100	J8	2	PS1 (+5, ±15)	PS0000037	J2	1
	+15V	Relay Board	045230100	J8	4	PS1 (+5, ±15)	PS0000037	J2	6
	AGND	Relay Board	045230100	J8	5	PS1 (+5, ±15)	PS0000037	J2	4
	-15V	Relay Board	045230100	J8	6	PS1 (+5, ±15)	PS0000037	J2	5
	+12V RET	Relay Board	045230100	J8	7	PS2 (+12)	PS0000039	J2	5
	+12V	Relay Board	045230100	J8	8	PS2 (+12)	PS0000039	J2	3
042790100	**CBL, HEATER/THERMISTOR**								
	+12V RET	Relay Board	045230100	J19	1	Lamp HTR/Thrm	041440000		1
	+12V	Relay Board	045230100	J19	2	Lamp HTR/Thrm	041440000		2
	+5VAVA	Motherboard	058021400	J27	6	Lamp HTR/Thrm	041440000		3
	THERMISTOR 3	Motherboard	058021400	J27	13	Lamp HTR/Thrm	041440000		4
	+5VAVA	Motherboard	058021400	J27	7	Sample Therm	042010000		1
	THERMISTOR 2	Motherboard	058021400	J27	14	Sample Therm	042010000		2
	THERMISTOR 4	Motherboard	058021400	J27	12	O3 Gen HTR/Therm	041440100		6
	+5VAVA	Motherboard	058021400	J27	5	O3 Gen HTR/Therm	041440100		5
	+12V RET	Relay Board	045230100	J14	2	O3 Gen HTR/Therm	041440100		2
	+12V	Relay Board	045230100	J14	1	O3 Gen HTR/Therm	041440100		1
046710000	**CBL, MOTHERBOARD TO XMITTER BD (MULTIDROP OPTION)**								
	GND	Motherboard	058021100	P12	2	Xmitter bd w/Multidrop	069500000	J4	2
	RX0	Motherboard	058021100	P12	14	Xmitter bd w/Multidrop	069500000	J4	14
	RTS0	Motherboard	058021100	P12	13	Xmitter bd w/Multidrop	069500000	J4	13
	TX0	Motherboard	058021100	P12	12	Xmitter bd w/Multidrop	069500000	J4	12
	CTS0	Motherboard	058021100	P12	11	Xmitter bd w/Multidrop	069500000	J4	11
	RS-GND0	Motherboard	058021100	P12	10	Xmitter bd w/Multidrop	069500000	J4	10
	RTS1	Motherboard	058021100	P12	8	Xmitter bd w/Multidrop	069500000	J4	8
	CTS1/485-	Motherboard	058021100	P12	6	Xmitter bd w/Multidrop	069500000	J4	6
	RX1	Motherboard	058021100	P12	9	Xmitter bd w/Multidrop	069500000	J4	9
	TX1/485+	Motherboard	058021100	P12	7	Xmitter bd w/Multidrop	069500000	J4	7
	RS-GND1	Motherboard	058021100	P12	5	Xmitter bd w/Multidrop	069500000	J4	5
	RX1	Motherboard	058021100	P12	9	Xmitter bd w/Multidrop	069500000	J4	9
	TX1/485+	Motherboard	058021100	P12	7	Xmitter bd w/Multidrop	069500000	J4	7
	RS-GND1	Motherboard	058021100	P12	5	Xmitter bd w/Multidrop	069500000	J4	5

Interconnect List T700

(Reference: 069140100A DCN5870)

		CONNECTION FROM				CONNECTION TO			
Cable Part #	Signal	Assembly	PN	J/P	Pin	Assembly	PN	J/P	Pin
051790000	**CBL, POWER & SIGNAL DISTRIBUTION**								
	CH1	Motherboard	058021400	J109	6	Bench Det	041200000	J3	1
	AGND	Motherboard	058021400	J109	12	Bench Det	041200000	J3	4
	+15V	Relay Board	045230100	J11	4	Bench Det	041200000	J3	2
	-15V	Relay Board	045230100	J11	6	Bench Det	041200000	J3	3
	+12V RET	Relay Board	045230100	J11	7	Fan	040010000		1
	+12V	Relay Board	045230100	J11	8	Fan	040010000		2
	DGND	Relay Board	045230100	J11	1	LCD Interface Bd	066970000	J14	2
	VCC	Relay Board	045230100	J11	2	LCD Interface Bd	066970000	J14	3
	DGND	Relay Board	045230100	J12	1	LCD Interface Bd	066970000	J14	8
	VCC	Relay Board	045230100	J12	2	LCD Interface Bd	066970000	J14	1
	SDA	CAL1	Digital MFC		8	LCD Interface Bd	066970000	J14	5
	SCL	CAL1	Digital MFC		7	LCD Interface Bd	066970000	J14	6
	DGND	CAL1	Digital MFC		6	LCD Interface Bd	066970000	J14	10
	DGND	CAL1	Digital MFC		1	Relay Board	045230100	J9	1
	VCC	CAL1	Digital MFC		3	Relay Board	045230100	J9	2
	SDA	CAL1	Digital MFC		8	DIL1	Digital MFC		8
	SCL	CAL1	Digital MFC		7	DIL1	Digital MFC		7
	DGND	CAL1	Digital MFC		6	DIL1	Digital MFC		6
	SDA	CAL 2	Digital MFC		8	DIL1	Digital MFC		8
	SCL	CAL 2	Digital MFC		7	DIL1	Digital MFC		7
	DGND	CAL 2	Digital MFC		6	DIL1	Digital MFC		6
	VCC	Relay Board	045230100	J9	2	DIL1	Digital MFC		3
	DGND	Relay Board	045230100	J9	1	DIL1	Digital MFC		1
	VCC	Relay Board	045230100	J9	2	CAL 2	Digital MFC		3
	DGND	Relay Board	045230100	J9	1	CAL 2	Digital MFC		1
	-15V	Relay Board	045230100	J12	6	CAL1	Analog MFC		9
	AGND	Relay Board	045230100	J12	5	CAL1	Analog MFC		12
	+15V	Relay Board	045230100	J12	4	CAL1	Analog MFC		11
	AGND	Relay Board	045230100	J12	3	Photo Press/Flo	040030600	J1	3
	+15V	Relay Board	045230100	J12	4	Photo Press/Flo	040030600	J1	6
	CH6	Motherboard	058021400	J109	2	Photo Press/Flo	040030600	J1	4
	CH11	Motherboard	058021400	J110	4	Photo Press/Flo	040030600	J1	5
	CH12	Motherboard	058021400	J110	3	Photo Press/Flo	040030600	J1	2
	CH14	Motherboard	058021400	J110	1	CAL1	Analog MFC		6
	CH13	Motherboard	058021400	J110	2	DIL1	Analog MFC		6
	CH9	Motherboard	058021400	J110	5	CAL2	Analog MFC		6
		Chassis				CAL2	Analog MFC		7
	-15V	Relay Board	045230100	J9	6	CAL2	Analog MFC		9
	+15V	Relay Board	045230100	J9	4	CAL2	Analog MFC		11
	AGND	Relay Board	045230100	J9	3	CAL2	Analog MFC		12
	-15V	Relay Board	045230100	J9	6	DIL1	Analog MFC		9
	+15V	Relay Board	045230100	J9	4	DIL1	Analog MFC		11
	AGND	Relay Board	045230100	J9	5	DIL1	Analog MFC		12
	DAC0V	Motherboard	058021400	J22	5	DIL1	Analog MFC		14
	AGND	Motherboard	058021400	J22	7	DIL1	Analog MFC		5
		Chassis				DIL1	Analog MFC		7
	DAC2V	Motherboard	058021400	J22	3	CAL2	Analog MFC		14
	AGND	Motherboard	058021400	J22	8	CAL2	Analog MFC		5
	DAC1V	CAL1	Analog MFC		14	Motherboard	058021400	J22	4
	AGND	CAL1	Analog MFC		5	Motherboard	058021400	J22	9
		CAL1	Analog MFC		7	Chassis			
	CH2	Motherboard	058021400	J109	5	IZS DET	041200200	J3	1
	AGND	Motherboard	058021400	J109	11	IZS DET	041200200	J3	4
	-15V	Relay Board	045230100	J13	6	IZS DET	041200200	J3	3
	+15V	Relay Board	045230100	J13	4	IZS DET	041200200	J3	2
	AGND	Relay Board	045230100	J13	5	Gas Flow PCA	040030500	J1	3
	+15V	Relay Board	045230100	J13	4	Gas Flow PCA	040030500	J1	6
	CH3	Motherboard	058021400	J109	4	Gas Flow PCA	040030500	J1	4
	CH4	Motherboard	058021400	J109	3	Gas Flow PCA	040030500	J1	2
054840000	**CBL, VALVE DRIVER & PUMP POWER**								
	+12V	Relay Board	045230100	J4	1	Photo Ref Valve	055220000	1	
	+12V RET	Relay Board	045230100	J4	2	Photo Ref Valve	055220000	2	
	+12V	Relay Board	045230100	J4	3	O3 Valve	055220000	1	
	+12V RET	Relay Board	045230100	J4	4	O3 Valve	055220000	2	
	+12V	Relay Board	045230100	J4	5	Pump	047020000	1	
	+12V RET	Relay Board	045230100	J4	6	Pump	047020000	2	

Interconnect List T700

(Reference: 069140100A DCN5870)

		CONNECTION FROM				CONNECTION TO			
Cable Part #	**Signal**	**Assembly**	**PN**	**J/P**	**Pin**	**Assembly**	**PN**	**J/P**	**Pin**
056310000	**CBL, I2C SIGNAL**								
	+15V	Relay Board	045230100	J5	4	IZS Lamp Supply	041660100	J1	1
	AGND	Relay Board	045230100	J5	3	IZS Lamp Supply	041660100	J1	2
	SCL	Bench Lamp Supply	041660500	J1	3	IZS Lamp Supply	041660100	J1	3
	SDA	Bench Lamp Supply	041660500	J1	4	IZS Lamp Supply	041660100	J1	4
	SCL	Bench Lamp Supply	041660500	J1	3	Motherboard	058021400	J107	3
	SDA	Bench Lamp Supply	041660500	J1	4	Motherboard	058021400	J107	5
	+15V	Bench Lamp Supply	041660500	J1	1	Relay Board	045230100	J10	4
	AGND	Bench Lamp Supply	041660500	J1	2	Relay Board	045230100	J10	3
	+12VRET	Valve Driver Board	054690000	J1	2	Relay Board	045230100	J10	7
	+12V	Valve Driver Board	054690000	J1	5	Relay Board	045230100	J10	8
	DGND	Valve Driver Board	054690000	J1	1	Relay Board	045230100	J10	1
	VCC	Valve Driver Board	054690000	J1	4	Relay Board	045230100	J10	2
	SCL	Valve Driver Board	054690000	J1	3	Relay Board	045230100	J3	1
	SDA	Valve Driver Board	054690000	J1	6	Relay Board	045230100	J3	2
	SCL	Valve Driver Board	054690000	J1	3	IZS Lamp Supply	041660100	J1	3
	SDA	Valve Driver Board	054690000	J1	6	IZS Lamp Supply	041660100	J1	4
	Shield	Motherboard	058021400	J107	6	Relay Board	045230100	J3	5
067370000	**CBL, I2C TO AUX I/O PCA**	**(ANALOG IN OPTION)**							
	ATX-	Motherboard	058021400	J106	1	Aux I/O	067300000	J2	1
	ATX+	Motherboard	058021400	J106	2	Aux I/O	067300000	J2	2
	LED0	Motherboard	058021400	J106	3	Aux I/O	067300000	J2	3
	ARX+	Motherboard	058021400	J106	4	Aux I/O	067300000	J2	4
	ARX-	Motherboard	058021400	J106	5	Aux I/O	067300000	J2	5
	LED0+	Motherboard	058021400	J106	6	Aux I/O	067300000	J2	6
	LED1+	Motherboard	058021400	J106	8	Aux I/O	067300000	J2	8
067380000	**CBL, CPU COM to AUX I/O**	**(USB OPTION)**							
	RXD1	CPU PCA	067240000	COM1	1	AUX I/O PCA	0673000 or -02	J3	1
	DCD1	CPU PCA	067240000	COM1	2	AUX I/O PCA	0673000 or -02	J3	2
	DTR1	CPU PCA	067240000	COM1	3	AUX I/O PCA	0673000 or -02	J3	3
	TXD1	CPU PCA	067240000	COM1	4	AUX I/O PCA	0673000 or -02	J3	4
	DSR1	CPU PCA	067240000	COM1	5	AUX I/O PCA	0673000 or -02	J3	5
	GND	CPU PCA	067240000	COM1	6	AUX I/O PCA	0673000 or -02	J3	6
	CTS1	CPU PCA	067240000	COM1	7	AUX I/O PCA	0673000 or -02	J3	7
	RTS1	CPU PCA	067240000	COM1	8	AUX I/O PCA	0673000 or -02	J3	8
	RI1	CPU PCA	067240000	COM1	10	AUX I/O PCA	0673000 or -02	J3	10
067380000	**CBL, CPU COM to AUX I/O**	**(MULTIDROP OPTION)**							
	RXD	CPU PCA	067240000	COM1	1	Xmitter bd w/Multidrop	069500000	J3	1
	DCD	CPU PCA	067240000	COM1	2	Xmitter bd w/Multidrop	069500000	J3	2
	DTR	CPU PCA	067240000	COM1	3	Xmitter bd w/Multidrop	069500000	J3	3
	TXD	CPU PCA	067240000	COM1	4	Xmitter bd w/Multidrop	069500000	J3	4
	DSR	CPU PCA	067240000	COM1	5	Xmitter bd w/Multidrop	069500000	J3	5
	GND	CPU PCA	067240000	COM1	6	Xmitter bd w/Multidrop	069500000	J3	6
	CTS	CPU PCA	067240000	COM1	7	Xmitter bd w/Multidrop	069500000	J3	7
	RTS	CPU PCA	067240000	COM1	8	Xmitter bd w/Multidrop	069500000	J3	8
	RI	CPU PCA	067240000	COM1	10	Xmitter bd w/Multidrop	069500000	J3	10
067390000	**CBL, CPU ETHERNET TO AUX I/O**								
	ATX-	CPU PCA	067240000	LAN	1	Aux I/O	067300100	J2	1
	ATX+	CPU PCA	067240000	LAN	2	Aux I/O	067300100	J2	2
	LED0	CPU PCA	067240000	LAN	3	Aux I/O	067300100	J2	3
	ARX+	CPU PCA	067240000	LAN	4	Aux I/O	067300100	J2	4
	ARX-	CPU PCA	067240000	LAN	5	Aux I/O	067300100	J2	5
	LED0+	CPU PCA	067240000	LAN	6	Aux I/O	067300100	J2	6
	LED1	CPU PCA	067240000	LAN	7	Aux I/O	067300100	J2	7
	LED1+	CPU PCA	067240000	LAN	8	Aux I/O	067300100	J2	8
067410000	**CBL, CPU USB TO LCD INTERFACE PCA**								
	GND	CPU PCA	067240000	USB	8	LCD Interface PCA	066970000	JP9	
	LUSBD3+	CPU PCA	067240000	USB	6	LCD Interface PCA	066970000	JP9	
	LUSBD3-	CPU PCA	067240000	USB	4	LCD Interface PCA	066970000	JP9	
	VCC	CPU PCA	067240000	USB	2	LCD Interface PCA	066970000	JP9	

Interconnect List T700

(Reference: 069140100A DCN5870)

		CONNECTION FROM				**CONNECTION TO**			
Cable Part #	**Signal**	**Assembly**	**PN**	**J/P**	**Pin**	**Assembly**	**PN**	**J/P**	**Pin**
06746	**CBL, MOTHERBOAD TO CPU**								
	RXD(0)	CPU PCA	067240000	COM1	1	Motherboard	058021400	J12	14
	RTS(0)	CPU PCA	067240000	COM1	8	Motherboard	058021400	J12	13
	TXD(0)	CPU PCA	067240000	COM1	4	Motherboard	058021400	J12	12
	CTS(0)	CPU PCA	067240000	COM1	7	Motherboard	058021400	J12	11
	GND(0)	CPU PCA	067240000	COM1	6	Motherboard	058021400	J12	10
	RXD(1)	CPU PCA	067240000	COM2	1	Motherboard	058021400	J12	9
	RTS(1)	CPU PCA	067240000	COM2	8	Motherboard	058021400	J12	8
	TXD(1)	CPU PCA	067240000	COM2	4	Motherboard	058021400	J12	7
	CTS(1)	CPU PCA	067240000	COM2	7	Motherboard	058021400	J12	6
	GND(1)	CPU PCA	067240000	COM2	6	Motherboard	058021400	J12	5
	485+	CPU PCA	067240000	CN5	1	Motherboard	058021400	J12	9
	485-	CPU PCA	067240000	CN5	2	Motherboard	058021400	J12	7
	GND	CPU PCA	067240000	CN5	3	Motherboard	058021400	J12	5
	Shield					Motherboard	058021400	J12	2
WR256	**CBL, XMITTER TO INTERFACE**								
		LCD Interface	066970000	J15		Transmitter Board	068810000	J1	

REVISIONS				
REV	DESCRIPTION	DATE	DCN	APPROVED
A	INITIAL RELEASE	10/4/10	5870	KV

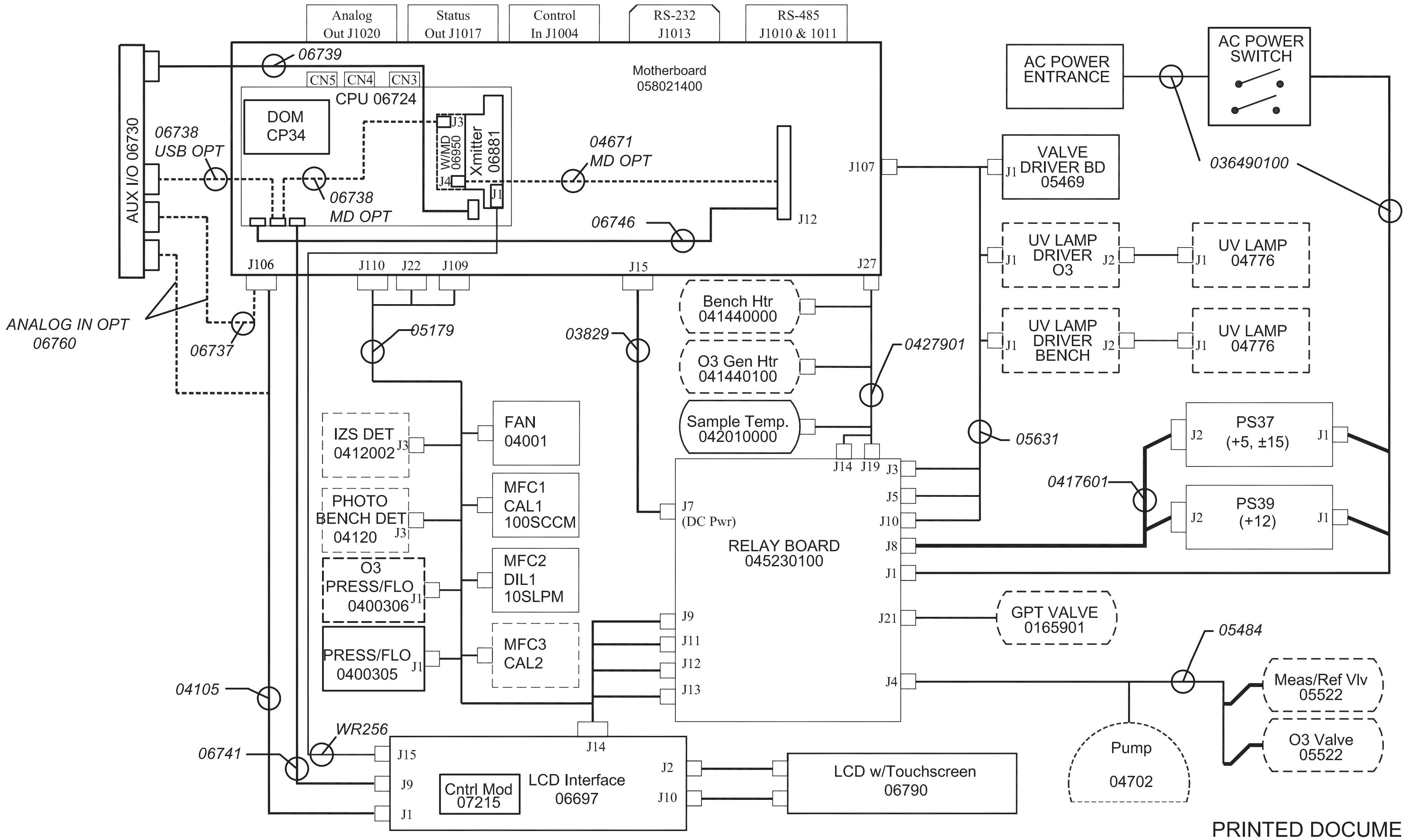
Analog Out J1020
Status Out J1017
Control In J1004
RS-232 J1013
RS-485 J1010 & 1011
Motherboard 058021400
AUX I/O 06730
06739
CN5
CN4
CN3
CPU 06724
DOM CP34
J3
W/MD 06950
J4
Xmitter 06881
J1
06738 USB OPT
06738 MD OPT
04671 MD OPT
06746
J12
J107
J106
J110
J22
J109
J15
J27
ANALOG IN OPT 06760
06737
05179
03829
AC POWER ENTRANCE
AC POWER SWITCH
036490100
VALVE DRIVER BD 05469
J1
UV LAMP DRIVER O3
J2
UV LAMP 04776
UV LAMP DRIVER BENCH
Bench Htr 041440000
O3 Gen Htr 041440100
0427901
Sample Temp. 042010000
05631
PS37 (+5, ±15)
PS39 (+12)
0417601
IZS DET 0412002
FAN 04001
PHOTO BENCH DET 04120
MFC1 CAL1 100SCCM
O3 PRESS/FLO 0400306
MFC2 DIL1 10SLPM
PRESS/FLO 0400305
MFC3 CAL2
J14
J19
J3
J5
J10
J8
J1
J7 (DC Pwr)
RELAY BOARD 045230100
J9
J11
J12
J13
J21
J4
GPT VALVE 0165901
05484
Meas/Ref Vlv 05522
O3 Valve 05522
Pump 04702
04105
WR256
06741
J15
J9
J1
Cntrl Mod 07215
LCD Interface 06697
J14
J2
J10
LCD w/Touchscreen 06790

PRINTED DOCUMENTS ARE UNCONTROLLED

KEY:
1. All part numbers in *Italic* identify cables that are refered to in the accompanying document 069140100.
2. All items in Dashed boxes are optional.

The information hereon is the property of API and is submitted in strictest confidence for reference only. Unauthorized use by anyone for any other purposes is prohibited. This document or an information contained in it may not be duplicated without proper authorization.

THIRD ANGLE PROJECTION

UNLESS OTHERWISE SPECIFIED
DIMENSIONS ARE IN INCHES
TOLERANCES ARE:

FRACTIONS	DECIMALS	ANGULAR
± 1/32	±.03[0.76] ±.010[0.25]	±0° 30'

DO NOT SCALE DRAWING
TREATMENT NA
FINISH
SIMILAR TO

CONTRACT: NA

APPROVALS		DATE
DRAWN	KV	5/10
CHECK		
CCB		
ISSUED		

TELEDYNE
Advanced Pollution Instrumentation
A Teledyne Technologies Company

TITLE INTERCONNECT DRAWING
T700

SIZE	CAGE CODE NO.	DWG. NO.	REV
B	1JZF4	06914	A

SCALE 1/1 FILE 06914 SHEET 1 OF 1

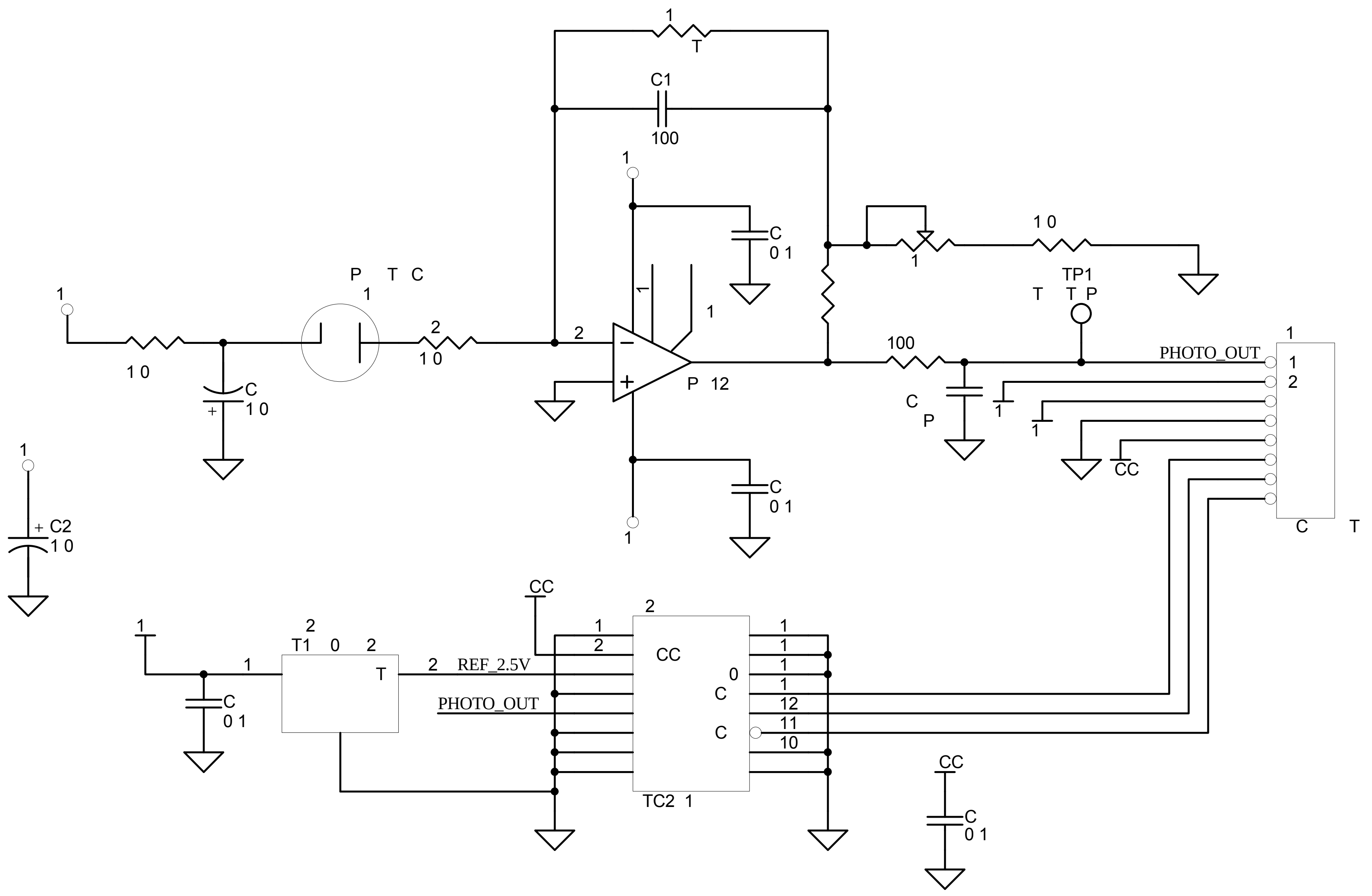

1
T
C1
100
1
C
0 1
1 0
1
TP1
T T P
P T C
1
1
2
1 0
1 0
C
1 0
2
1
P 12
100
PHOTO_OUT
1
1
2
C
P
1
1
CC
C T
1
C
0 1
1
1
C2
1 0
CC
2
1
T1 0 2
1
T
2 REF_2.5V
PHOTO_OUT
C
0 1
1
2
CC
0
C
C
1
1
1
1
12
11
10
TC2 1
CC
C
0 1

PC T

PC	1
0 120 0000	
0 120 0200	2 0

TELEDYNE
INSTRUMENTS
Advanced Pollution Instrumentation

The information herein is the property of API and is submitted in strictest confidence for reference only. Unauthorized use by anyone for any other purposes is prohibited. This document or any information contained in it may not be duplicated without proper authorization.

PP	T
W	
C C	
PP	

PCA, UV DETECTOR PREAMP

	W	
	04420	**B**

T	T	
200	1	1

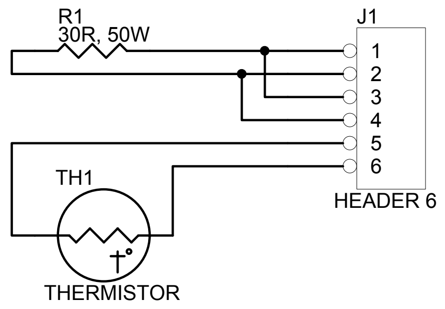

Rev	Date	Change Description	Eng
A	8/1/02	Initial release for PCA schematic	KL

TELEDYNE
INSTRUMENTS
Advanced Pollution Instrumentation

The information herein is the property of API and is submitted in strictest confidence for reference only. Unauthorized use by anyone for any other purposes is prohibited. This document or any information contained in it may not be duplicated without proper authorization.

APPROVALS	DATE
DRAWN	
CHECKED	
APPROVED	

SCH, DC HEATER/THERMISTOR

SIZE	DRAWING NO.	REVISION
B	04422	A

LAST MOD.	SHEET
1-Aug-2002	1 of 1

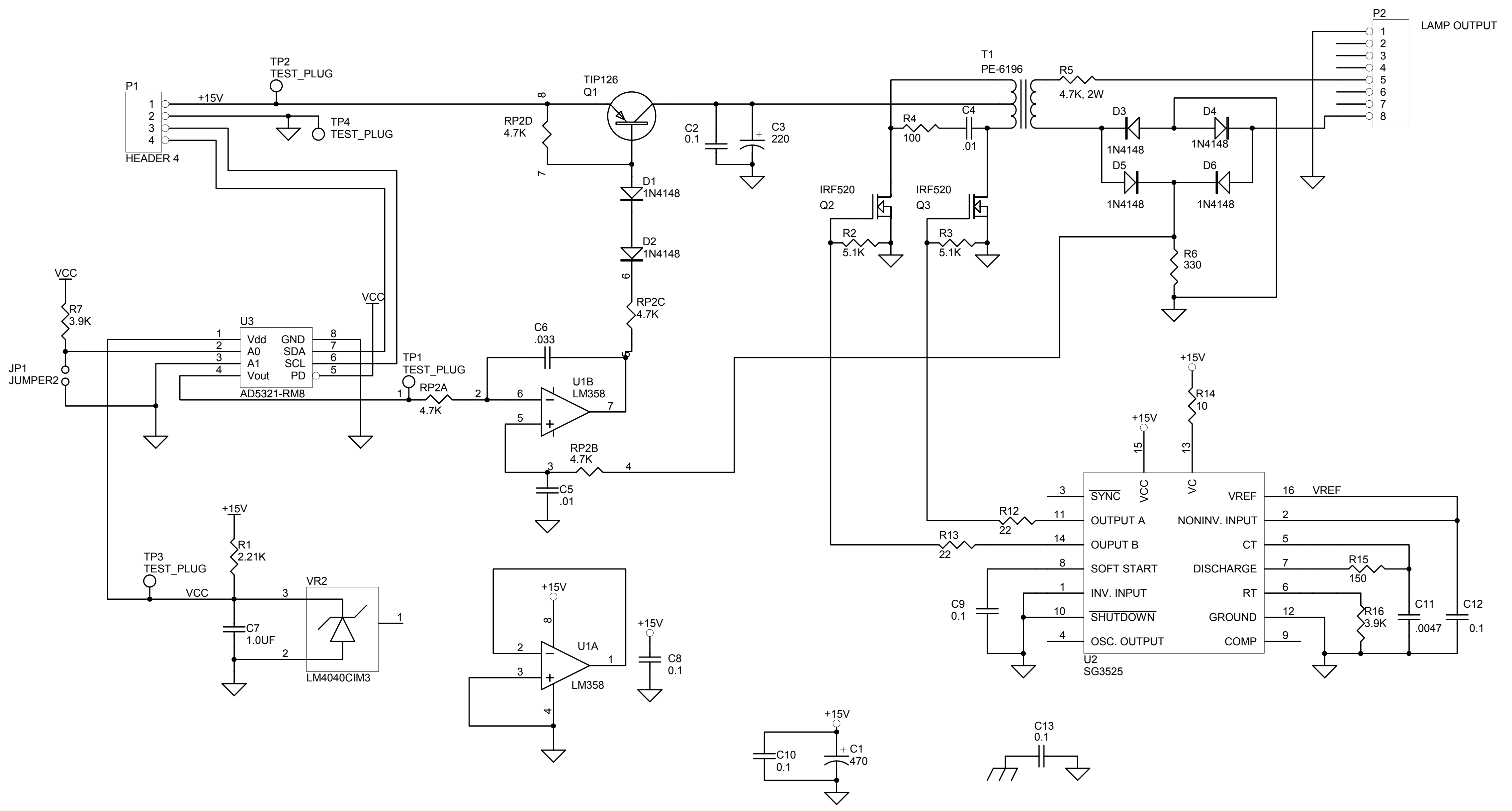
P1
HEADER 4
+15V
TP2
TEST_PLUG
TP4
TEST_PLUG
TIP126
Q1
RP2D
4.7K
D1
1N4148
D2
1N4148
RP2C
4.7K
C2
0.1
C3
220
T1
PE-6196
R5
4.7K, 2W
R4
100
C4
.01
D3
1N4148
D4
1N4148
D5
1N4148
D6
1N4148
IRF520
Q2
IRF520
Q3
R2
5.1K
R3
5.1K
R6
330
P2
LAMP OUTPUT
VCC
R7
3.9K
JP1
JUMPER2
U3
Vdd
A0
A1
Vout
GND
SDA
SCL
PD
AD5321-RM8
TP1
TEST_PLUG
RP2A
4.7K
C6
.033
U1B
LM358
RP2B
4.7K
C5
.01
+15V
R14
10
U2
SG3525
SYNC
OUTPUT A
OUPUT B
SOFT START
INV. INPUT
SHUTDOWN
OSC. OUTPUT
VCC
VC
VREF
NONINV. INPUT
CT
DISCHARGE
RT
GROUND
COMP
R12
22
R13
22
R15
150
R16
3.9K
C9
0.1
C11
.0047
C12
0.1
R1
2.21K
TP3
TEST_PLUG
VR2
LM4040CIM3
C7
1.0UF
U1A
LM358
C8
0.1
C10
0.1
C1
470
C13
0.1

NOTE: THIS SCHEMATIC APPLIES TO THE FOLLOWING PCA'S:

PCA#	NOTE
04166-0000	M400E BENCH AND IZS LAMP SUPPLY SHUNT INSTALLED IN J1 FOR BENCH SUPPLY SHUNT NOT INSTALLED IN J1 FOR IZS SUPPLY

CHANGE NOTES

REV.	DATE	CHANGE DESCRIPTION	INITIAL
A	8/1/02	INITIAL RELEASE	KL

TELEDYNE
INSTRUMENTS
Advanced Pollution Instrumentation

The information herein is the property of API and is submitted in strictest confidence for reference only. Unauthorized use by anyone for any other purposes is prohibited. This document or any information contained in it may not be duplicated without proper authorization.

APPROVALS	DATE
DRAWN KL	3/4/97
CHECKED	
APPROVED	

SCH, UV LAMP DRIVER, M450

SIZE: B
DRAWING NO.: 04421
REVISION: A
LAST MOD.: 1-Aug-2002
SHEET: 1 of 1

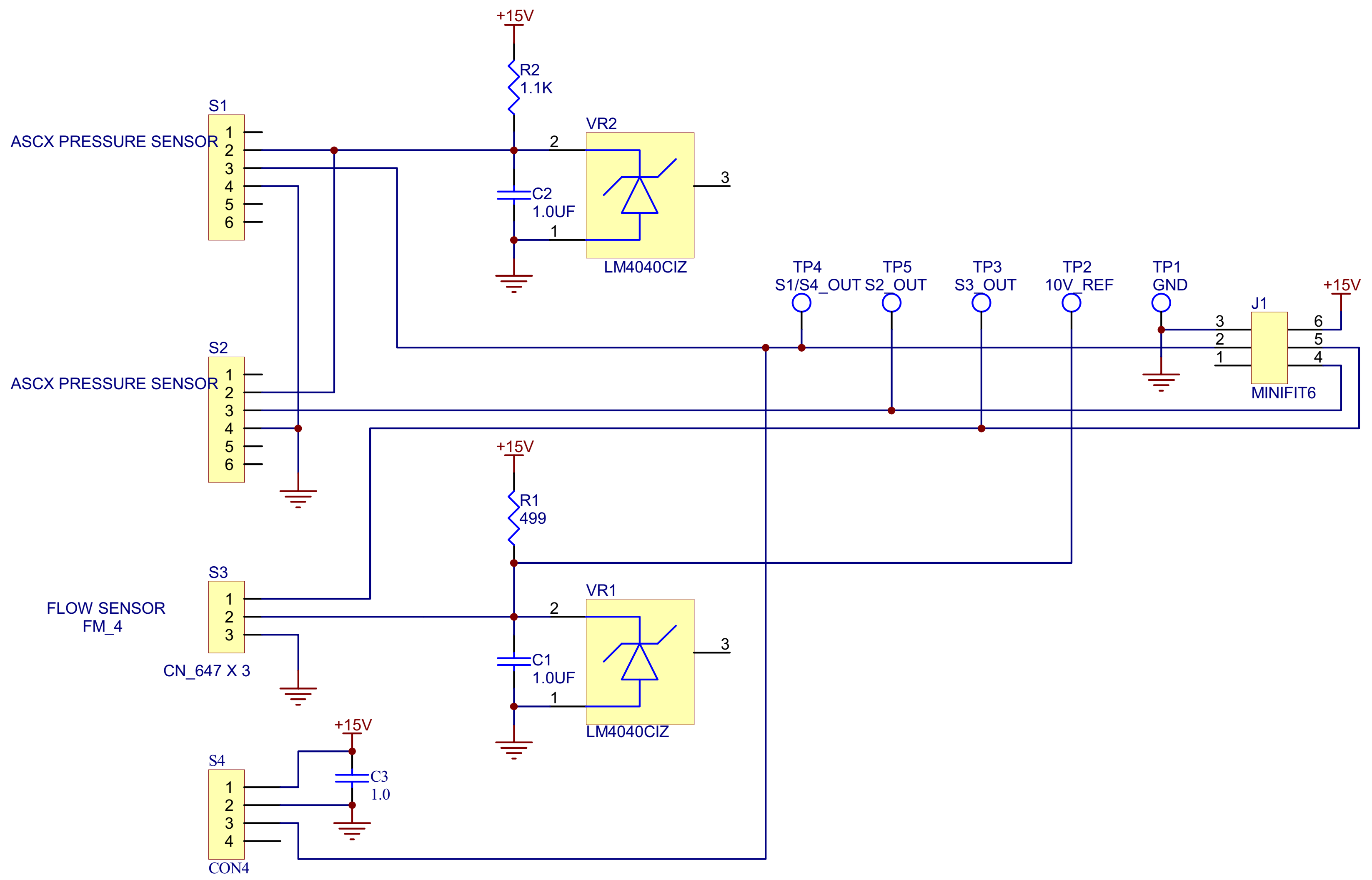

+15V
R2
1.1K
VR2
2
3
C2
1.0UF
1
LM4040CIZ
S1
ASCX PRESSURE SENSOR
1
2
3
4
5
6
S2
ASCX PRESSURE SENSOR
1
2
3
4
5
6
TP4
S1/S4_OUT
TP5
S2_OUT
TP3
S3_OUT
TP2
10V_REF
TP1
GND
J1
+15V
3
2
1
6
5
4
MINIFIT6
+15V
R1
499
S3
FLOW SENSOR
FM_4
1
2
3
CN_647 X 3
VR1
2
3
C1
1.0UF
1
LM4040CIZ
+15V
S4
C3
1.0
1
2
3
4
CON4

TELEDYNE
INSTRUMENTS
Advanced Pollution Instrumentation

The information herein is the property of API and is submitted in strictest confidence for reference only. Unauthorized use by anyone for any other purposes is prohibited. This document or any information contained in it may not be duplicated without proper authorization.

APPROVALS	DATE
DRAWN	
CHECKED	
APPROVED	

SCH, PCA 04003, PRESS/FLOW, 'E' SERIES

SIZE B
DRAWING NO. **04354**
REVISION **D**
LAST MOD. **3-Dec-2007**
SHEET **1** of **1**

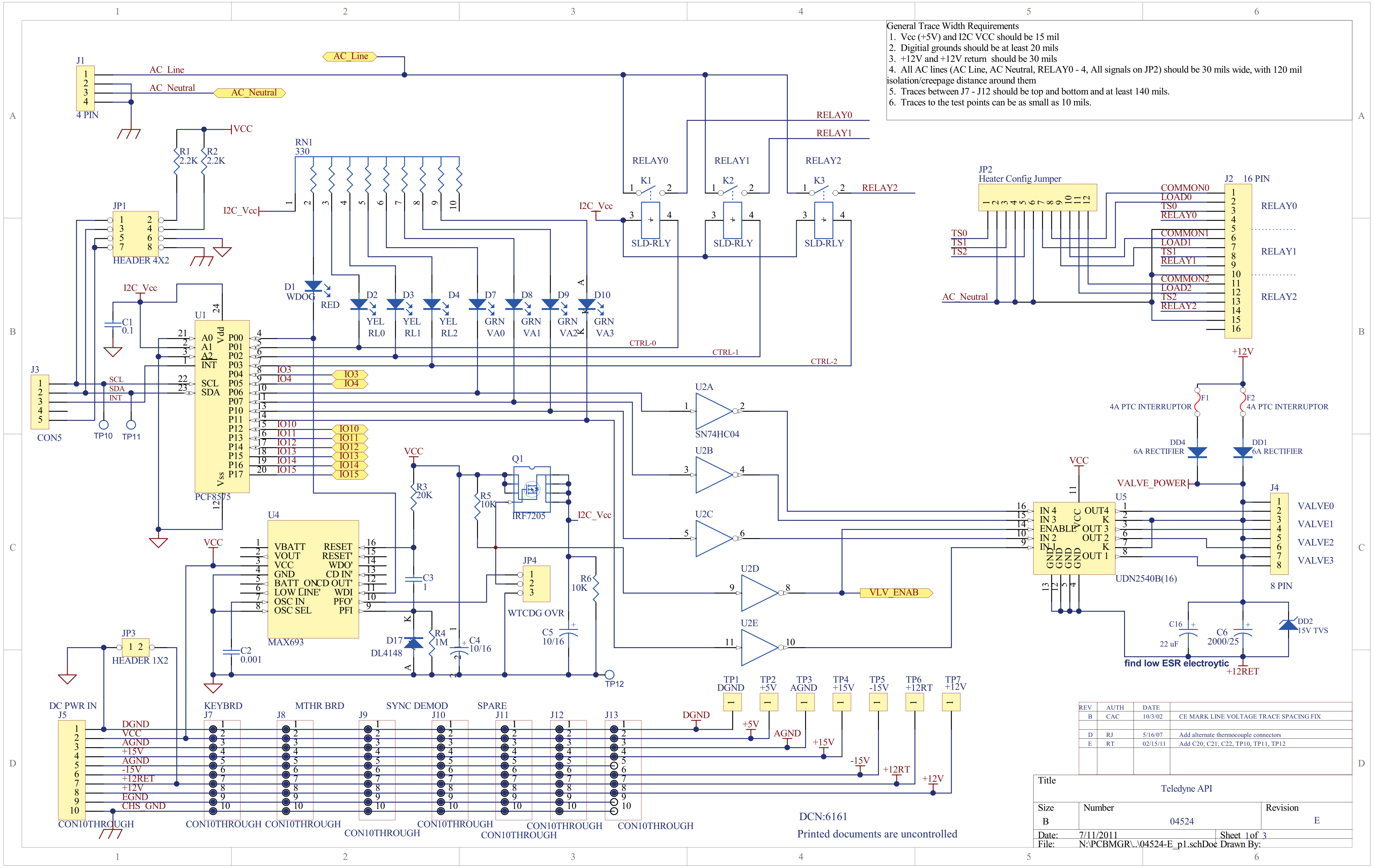
J1
AC Line
AC Neutral
4 PIN
VCC
R1
2.2K
R2
2.2K
JP1
HEADER 4X2
RN1
330
I2C_Vcc
C1
0.1
J3
SCL
SDA
INT
CON5
TP10
TP11
U1
A0
A1
A2
INT
SCL
SDA
Vdd
Vss
P00
P01
P02
P03
P04
P05
P06
P07
P10
P11
P12
P13
P14
P15
P16
P17
PCF8575
IO3
IO4
IO10
IO11
IO12
IO13
IO14
IO15
D1
WDOG
RED
D2
YEL
RL0
D3
YEL
RL1
D4
YEL
RL2
D7
GRN
VA0
D8
GRN
VA1
D9
GRN
VA2
D10
GRN
VA3
CTRL-0
CTRL-1
CTRL-2
RELAY0
RELAY1
RELAY2
K1
K2
K3
SLD-RLY
JP2
Heater Config Jumper
TS0
TS1
TS2
J2
16 PIN
COMMON0
LOAD0
RELAY0
COMMON1
LOAD1
RELAY1
COMMON2
LOAD2
RELAY2
U2A
U2B
U2C
U2D
U2E
SN74HC04
VLV_ENAB
+12V
F1
F2
4A PTC INTERRUPTOR
DD4
DD1
6A RECTIFIER
VALVE_POWER
U5
IN 4
IN 3
ENABLE
IN 2
IN 1
OUT4
OUT 3
OUT 2
OUT 1
GND
UDN2540B(16)
J4
VALVE0
VALVE1
VALVE2
VALVE3
8 PIN
C16
22 uF
C6
2000/25
DD2
15V TVS
find low ESR electroytic
+12RET
Q1
IRF7205
R5
10K
R3
20K
C3
1
JP4
WTCDG OVR
R6
10K
C5
10/16
TP12
U4
VBATT
VOUT
VCC
GND
BATT_ON
LOW LINE'
OSC IN
OSC SEL
RESET
RESET'
WDO'
CD IN'
CD OUT'
WDI
PFO'
PFI
MAX693
C2
0.001
D17
DL4148
R4
1M
C4
10/16
JP3
HEADER 1X2
DC PWR IN
J5
DGND
VCC
AGND
+15V
AGND
-15V
+12RET
+12V
EGND
CHS_GND
CON10THROUGH
KEYBRD
J7
MTHR BRD
J8
SYNC DEMOD
J9
J10
SPARE
J11
J12
J13
TP1
DGND
TP2
+5V
TP3
AGND
TP4
+15V
TP5
-15V
TP6
+12RT
TP7
+12V
DCN:6161
Printed documents are uncontrolled

General Trace Width Requirements
1. Vcc (+5V) and I2C VCC should be 15 mil
2. Digitial grounds should be at least 20 mils
3. +12V and +12V return should be 30 mils
4. All AC lines (AC Line, AC Neutral, RELAY0 - 4, All signals on JP2) should be 30 mils wide, with 120 mil isolation/creepage distance around them
5. Traces between J7 - J12 should be top and bottom and at least 140 mils.
6. Traces to the test points can be as small as 10 mils.

REV	AUTH	DATE	
B	CAC	10/3/02	CE MARK LINE VOLTAGE TRACE SPACING FIX
D	RJ	5/16/07	Add alternate thermocouple connectors
E	RT	02/15/11	Add C20, C21, C22, TP10, TP11, TP12

Title
Teledyne API

Size	Number	Revision
B	04524	E

Date: 7/11/2011 Sheet 1 of 3
File: N:\PCBMGR\..\04524-E_p1.schDoc Drawn By:

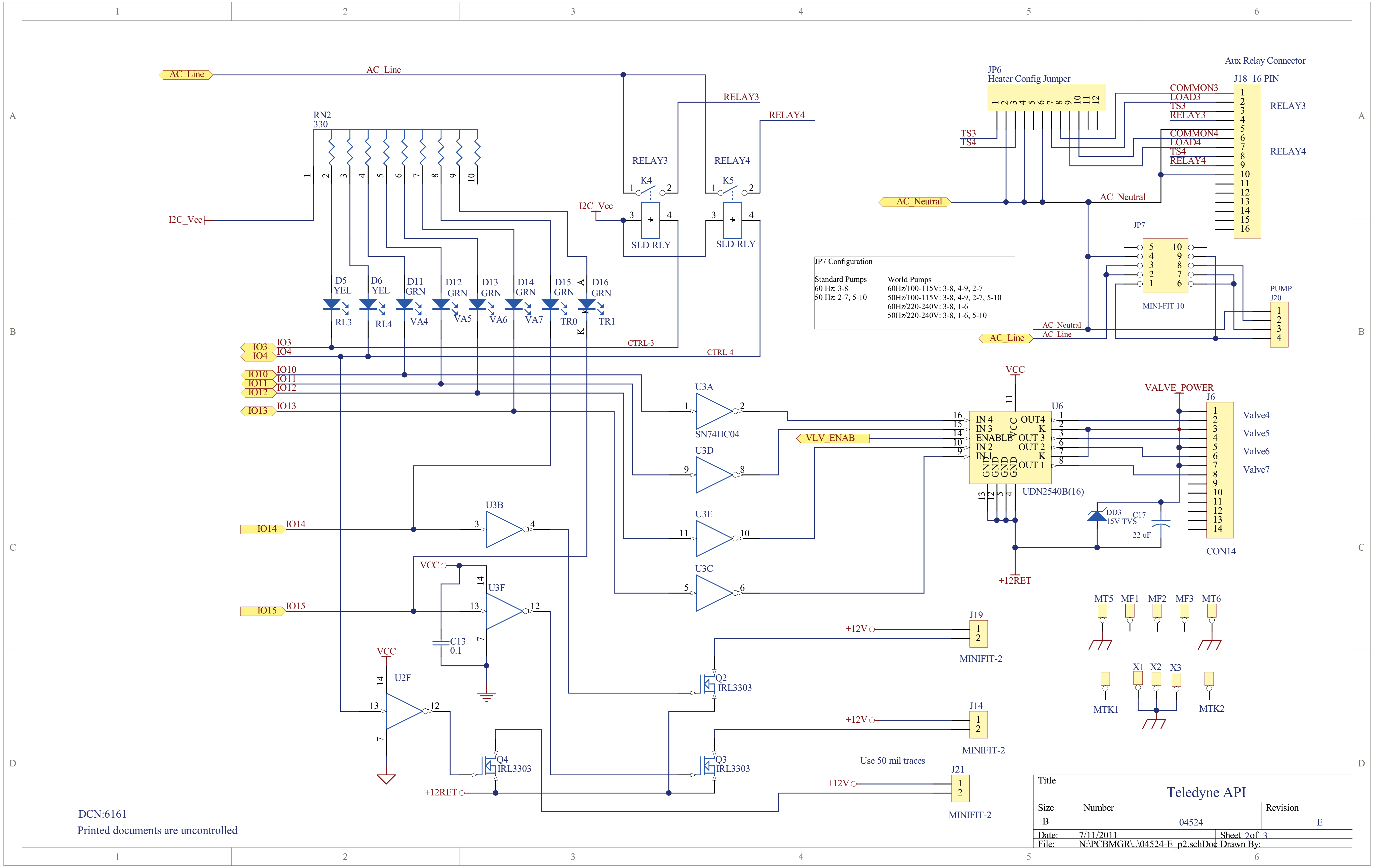
AC_Line
AC_Line
RN2
330
I2C_Vcc
RELAY3
RELAY4
K4
K5
SLD-RLY
SLD-RLY
I2C_Vcc
D5 YEL RL3
D6 YEL RL4
D11 GRN VA4
D12 GRN VA5
D13 GRN VA6
D14 GRN VA7
D15 GRN TR0
D16 GRN TR1
IO3
IO4
IO10
IO11
IO12
IO13
IO14
IO15
CTRL-3
CTRL-4
U3A
SN74HC04
U3D
U3B
U3E
U3C
U3F
VCC
C13
0.1
U2F
Q2 IRL3303
Q3 IRL3303
Q4 IRL3303
+12RET
+12V
J19 MINIFIT-2
J14 MINIFIT-2
J21 MINIFIT-2
Use 50 mil traces
JP6
Heater Config Jumper
TS3
TS4
AC_Neutral
Aux Relay Connector
J18 16 PIN
COMMON3
LOAD3
TS3
RELAY3
COMMON4
LOAD4
TS4
RELAY4
RELAY3
RELAY4
JP7
MINI-FIT 10
PUMP
J20
AC_Neutral
AC_Line
VCC
U6
UDN2540B(16)
IN 4
IN 3
ENABLE
IN 2
IN 1
OUT4
K
OUT 3
OUT 2
K
OUT 1
GND
VCC
VLV_ENAB
VALVE_POWER
J6
Valve4
Valve5
Valve6
Valve7
CON14
DD3
15V TVS
C17
22 uF
+12RET
MT5
MF1
MF2
MF3
MT6
X1
X2
X3
MTK1
MTK2
DCN:6161
Printed documents are uncontrolled

JP7 Configuration

Standard Pumps	World Pumps
60 Hz: 3-8	60Hz/100-115V: 3-8, 4-9, 2-7
50 Hz: 2-7, 5-10	50Hz/100-115V: 3-8, 4-9, 2-7, 5-10
	60Hz/220-240V: 3-8, 1-6
	50Hz/220-240V: 3-8, 1-6, 5-10

Title
Teledyne API
Size B
Number 04524
Revision E
Date: 7/11/2011
Sheet 2of 3
File: N:\PCBMGR\..\04524-E_p2.schDoc Drawn By:

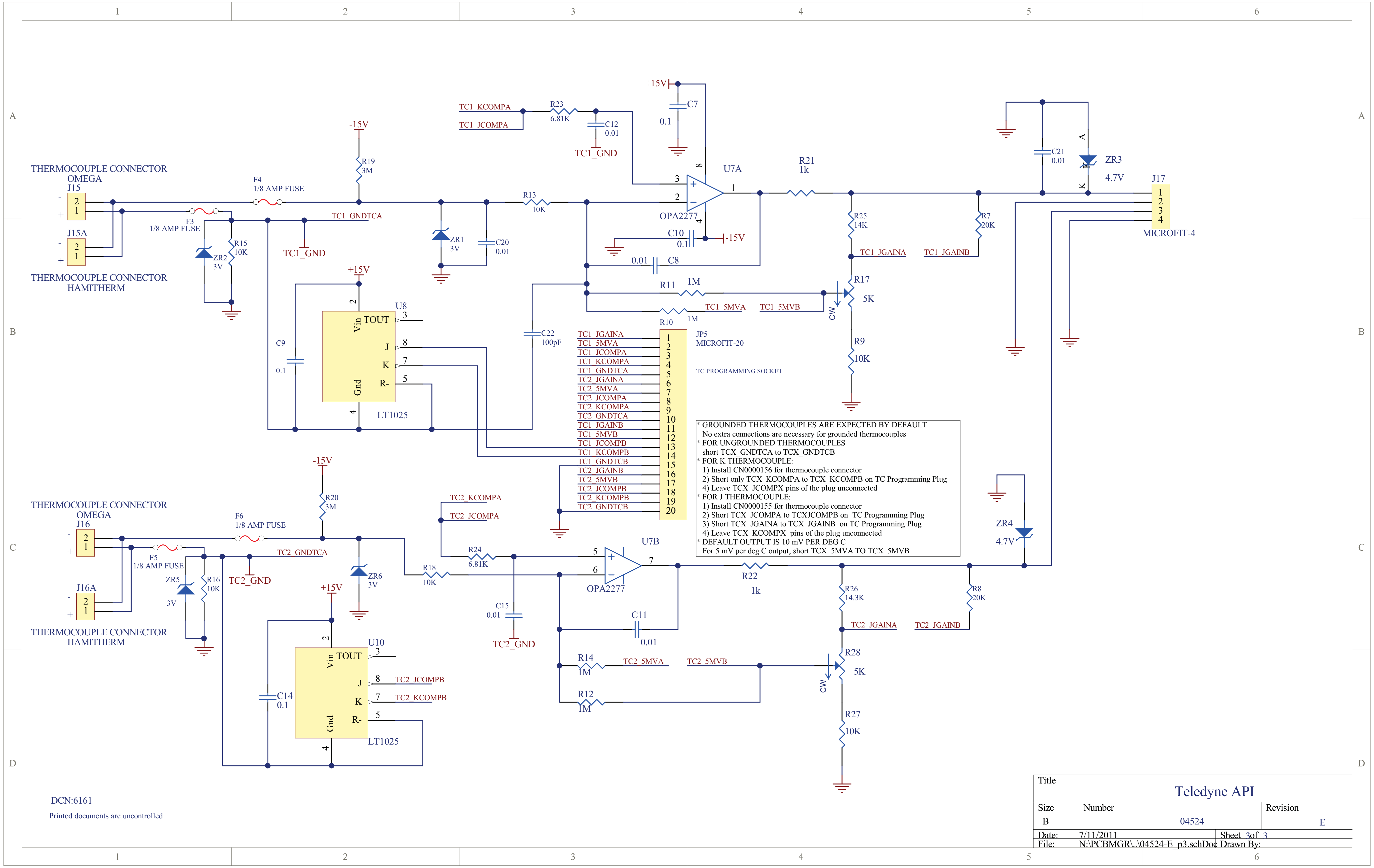
THERMOCOUPLE CONNECTOR
OMEGA
J15
THERMOCOUPLE CONNECTOR
HAMITHERM
J15A
F4
1/8 AMP FUSE
F3
1/8 AMP FUSE
R19
3M
-15V
ZR2
3V
R15
10K
TC1_GNDTCA
TC1_GND
ZR1
3V
C20
0.01
R13
10K
TC1_KCOMPA
TC1_JCOMPA
R23
6.81K
C12
0.01
TC1_GND
+15V
C7
0.1
U7A
OPA2277
C10
0.1
-15V
C8
0.01
R21
1k
R11
1M
R10
1M
TC1_5MVA
TC1_5MVB
R17
5K
CW
R25
14K
R7
20K
TC1_JGAINA
TC1_JGAINB
R9
10K
C21
0.01
ZR3
4.7V
J17
MICROFIT-4
+15V
U8
Vin
TOUT
J
K
R-
Gnd
LT1025
C9
0.1
C22
100pF
JP5
MICROFIT-20
TC PROGRAMMING SOCKET
TC1_JGAINA
TC1_5MVA
TC1_JCOMPA
TC1_KCOMPA
TC1_GNDTCA
TC2_JGAINA
TC2_5MVA
TC2_JCOMPA
TC2_KCOMPA
TC2_GNDTCA
TC1_JGAINB
TC1_5MVB
TC1_JCOMPB
TC1_KCOMPB
TC1_GNDTCB
TC2_JGAINB
TC2_5MVB
TC2_JCOMPB
TC2_KCOMPB
TC2_GNDTCB
THERMOCOUPLE CONNECTOR
OMEGA
J16
THERMOCOUPLE CONNECTOR
HAMITHERM
J16A
F6
1/8 AMP FUSE
F5
1/8 AMP FUSE
R20
3M
-15V
ZR5
3V
R16
10K
TC2_GNDTCA
TC2_GND
ZR6
3V
TC2_KCOMPA
TC2_JCOMPA
R24
6.81K
R18
10K
C15
0.01
TC2_GND
U7B
OPA2277
C11
0.01
R22
1k
R14
1M
R12
1M
TC2_5MVA
TC2_5MVB
R28
5K
CW
R26
14.3K
R8
20K
TC2_JGAINA
TC2_JGAINB
R27
10K
ZR4
4.7V
+15V
U10
Vin
TOUT
J
K
R-
Gnd
LT1025
C14
0.1
TC2_JCOMPB
TC2_KCOMPB

* GROUNDED THERMOCOUPLES ARE EXPECTED BY DEFAULT
No extra connections are necessary for grounded thermocouples
* FOR UNGROUNDED THERMOCOUPLES
short TCX_GNDTCA to TCX_GNDTCB
* FOR K THERMOCOUPLE:
1) Install CN0000156 for thermocouple connector
2) Short only TCX_KCOMPA to TCX_KCOMPB on TC Programming Plug
4) Leave TCX_JCOMPX pins of the plug unconnected
* FOR J THERMOCOUPLE:
1) Install CN0000155 for thermocouple connector
2) Short TCX_JCOMPA to TCXJCOMPB on TC Programming Plug
3) Short TCX_JGAINA to TCX_JGAINB on TC Programming Plug
4) Leave TCX_KCOMPX pins of the plug unconnected
* DEFAULT OUTPUT IS 10 mV PER DEG C
For 5 mV per deg C output, short TCX_5MVA TO TCX_5MVB

DCN:6161

Printed documents are uncontrolled

Title	Teledyne API		
Size B	Number 04524		Revision E
Date: 7/11/2011		Sheet 3of 3	
File: N:\PCBMGR\..\04524-E_p3.schDoc		Drawn By:	

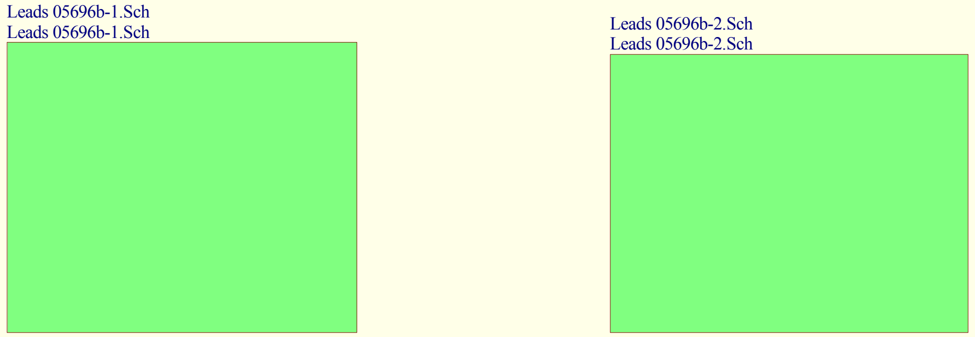
Leads 05696b-1.Sch
Leads 05696b-1.Sch
Leads 05696b-2.Sch
Leads 05696b-2.Sch

Printed Documents Are Uncontrolled

Title SCH, External Valve Interface PCA 05697		
Size B	Number 05698	Revision B
Date: 8-Dec-2006		Sheet0 of 3
File: N:\PCBMGR\05696.leads.rear.panel.adapter\Proto\05696.ddb		Drawn By:

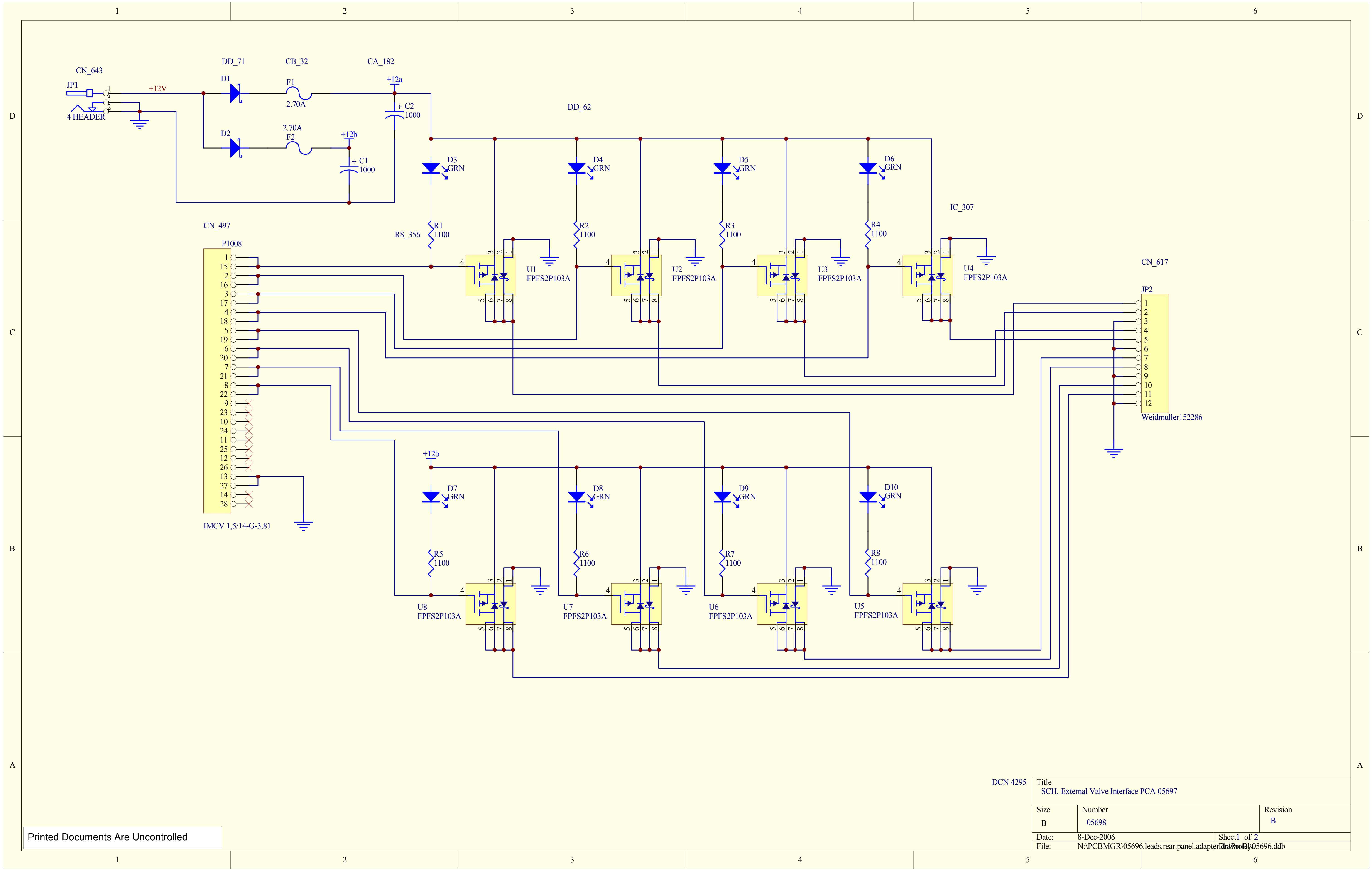
1
2
3
4
5
6
D
C
B
A
CN_643
JP1
4 HEADER
+12V
DD_71
D1
D2
CB_32
F1
2.70A
2.70A
F2
CA_182
+12a
C2
1000
+12b
C1
1000
DD_62
D3
GRN
D4
GRN
D5
GRN
D6
GRN
RS_356
R1
1100
R2
1100
R3
1100
R4
1100
IC_307
U1
FPFS2P103A
U2
FPFS2P103A
U3
FPFS2P103A
U4
FPFS2P103A
CN_497
P1008
IMCV 1,5/14-G-3,81
CN_617
JP2
Weidmuller152286
+12b
D7
GRN
D8
GRN
D9
GRN
D10
GRN
R5
1100
R6
1100
R7
1100
R8
1100
U8
FPFS2P103A
U7
FPFS2P103A
U6
FPFS2P103A
U5
FPFS2P103A

DCN 4295

Title
SCH, External Valve Interface PCA 05697

Size	Number	Revision
B	05698	B

Date: 8-Dec-2006 Sheet1 of 2

File: N:\PCBMGR\05696.leads.rear.panel.adapter\Protel\05696.ddb Drawn By:

Printed Documents Are Uncontrolled

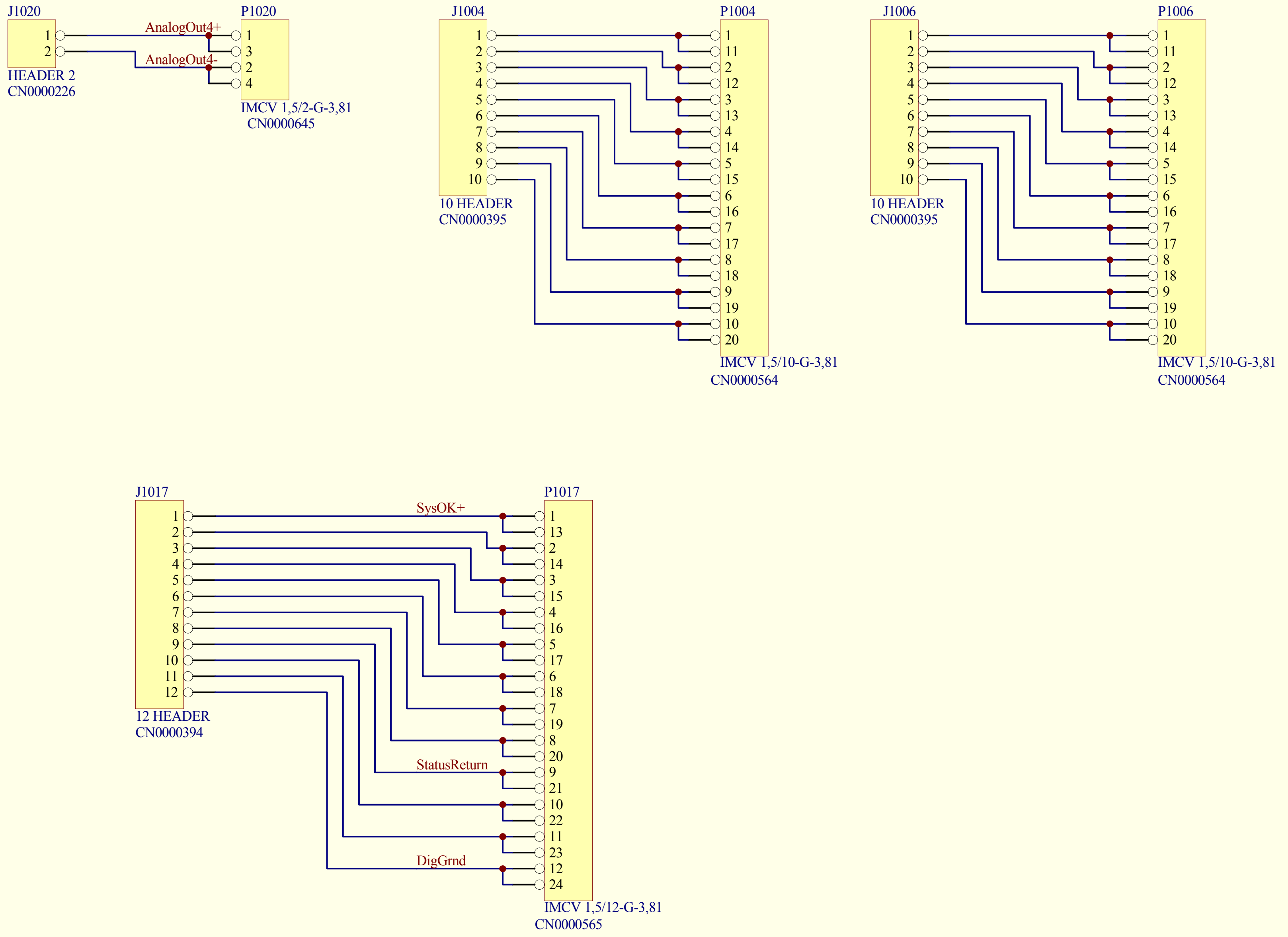
J1020
1
2
HEADER 2
CN0000226
AnalogOut4+
AnalogOut4-
P1020
1
3
2
4
IMCV 1,5/2-G-3,81
CN0000645
J1004
10 HEADER
CN0000395
P1004
IMCV 1,5/10-G-3,81
CN0000564
J1006
10 HEADER
CN0000395
P1006
IMCV 1,5/10-G-3,81
CN0000564
J1017
12 HEADER
CN0000394
SysOK+
StatusReturn
DigGrnd
P1017
IMCV 1,5/12-G-3,81
CN0000565

P1020 mates with positions 7 & 8 of J1020 on motherboard

DCN 4295

Title
SCH, External Valve Interface PCA 05697

Size B
Number 05698
Revision B

Date: 8-Dec-2006
Sheet2 of 2
File: N:\PCBMGR\05696.leads.rear.panel.adapter\Protel\05696.ddb
Drawn By:

Printed Documents Are Uncontrolled

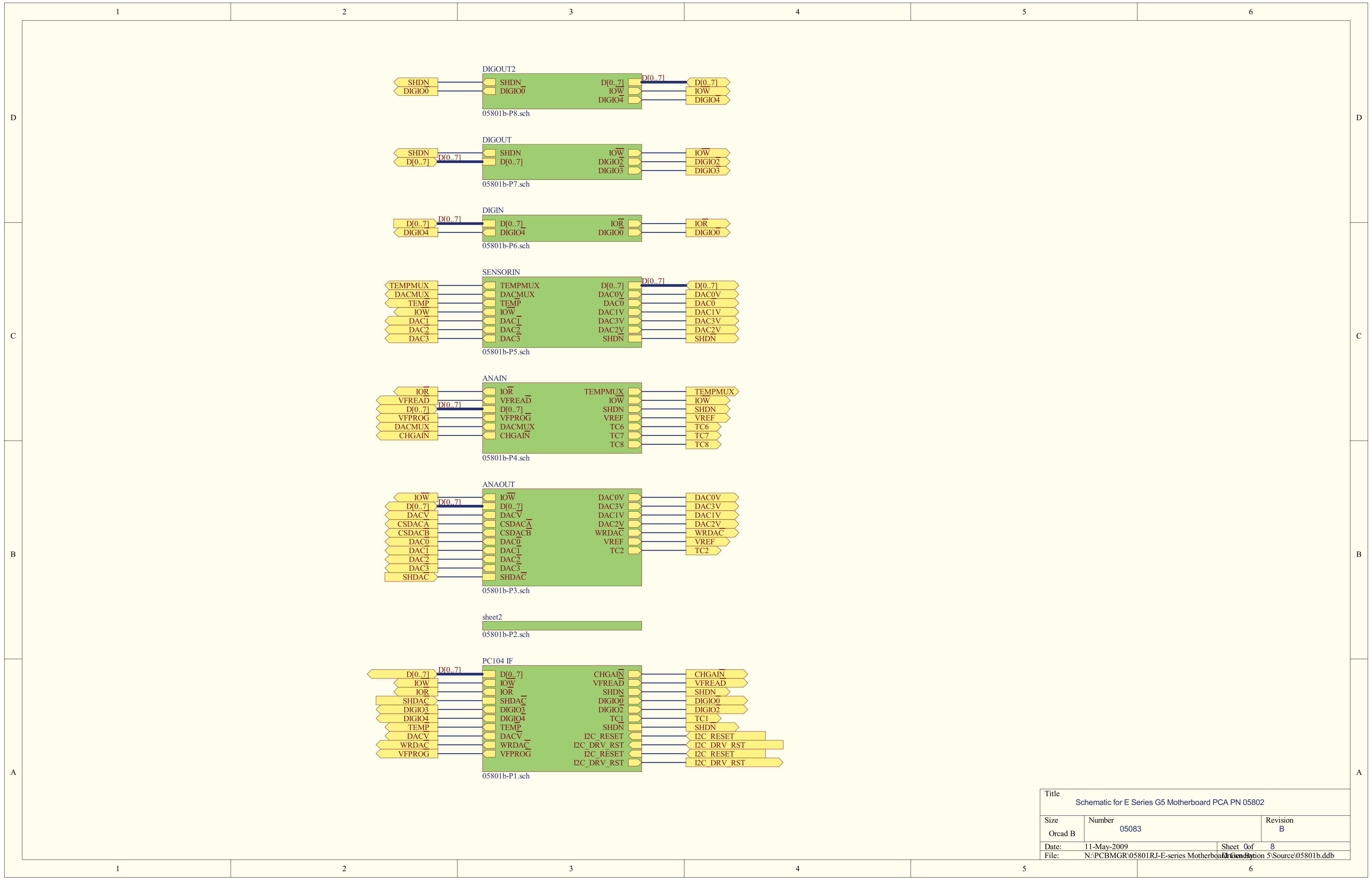
1
2
3
4
5
6
D
C
B
A
DIGOUT2
SHDN
DIGIO0
D[0..7]
IOW
DIGIO4
05801b-P8.sch
DIGOUT
SHDN
D[0..7]
IOW
DIGIO2
DIGIO3
05801b-P7.sch
DIGIN
D[0..7]
DIGIO4
IOR
DIGIO0
05801b-P6.sch
SENSORIN
TEMPMUX
DACMUX
TEMP
IOW
DAC1
DAC2
DAC3
D[0..7]
DAC0V
DAC0
DAC1V
DAC3V
DAC2V
SHDN
05801b-P5.sch
ANAIN
IOR
VFREAD
D[0..7]
VFPROG
DACMUX
CHGAIN
TEMPMUX
IOW
SHDN
VREF
TC6
TC7
TC8
05801b-P4.sch
ANAOUT
IOW
D[0..7]
DACV
CSDACA
CSDACB
DAC0
DAC1
DAC2
DAC3
SHDAC
DAC0V
DAC3V
DAC1V
DAC2V
WRDAC
VREF
TC2
05801b-P3.sch
sheet2
05801b-P2.sch
PC104 IF
D[0..7]
IOW
IOR
SHDAC
DIGIO3
DIGIO4
TEMP
DACV
WRDAC
VFPROG
CHGAIN
VFREAD
SHDN
DIGIO0
DIGIO2
TC1
SHDN
I2C_RESET
I2C_DRV_RST
I2C_RESET
I2C_DRV_RST
05801b-P1.sch
Title
Schematic for E Series G5 Motherboard PCA PN 05802
Size
Orcad B
Number
05083
Revision
B
Date:
11-May-2009
Sheet 0of 8
File:
N:\PCBMGR\05801RJ-E-series Motherboard Generation 5\Source\05801b.ddb
Drawn By:

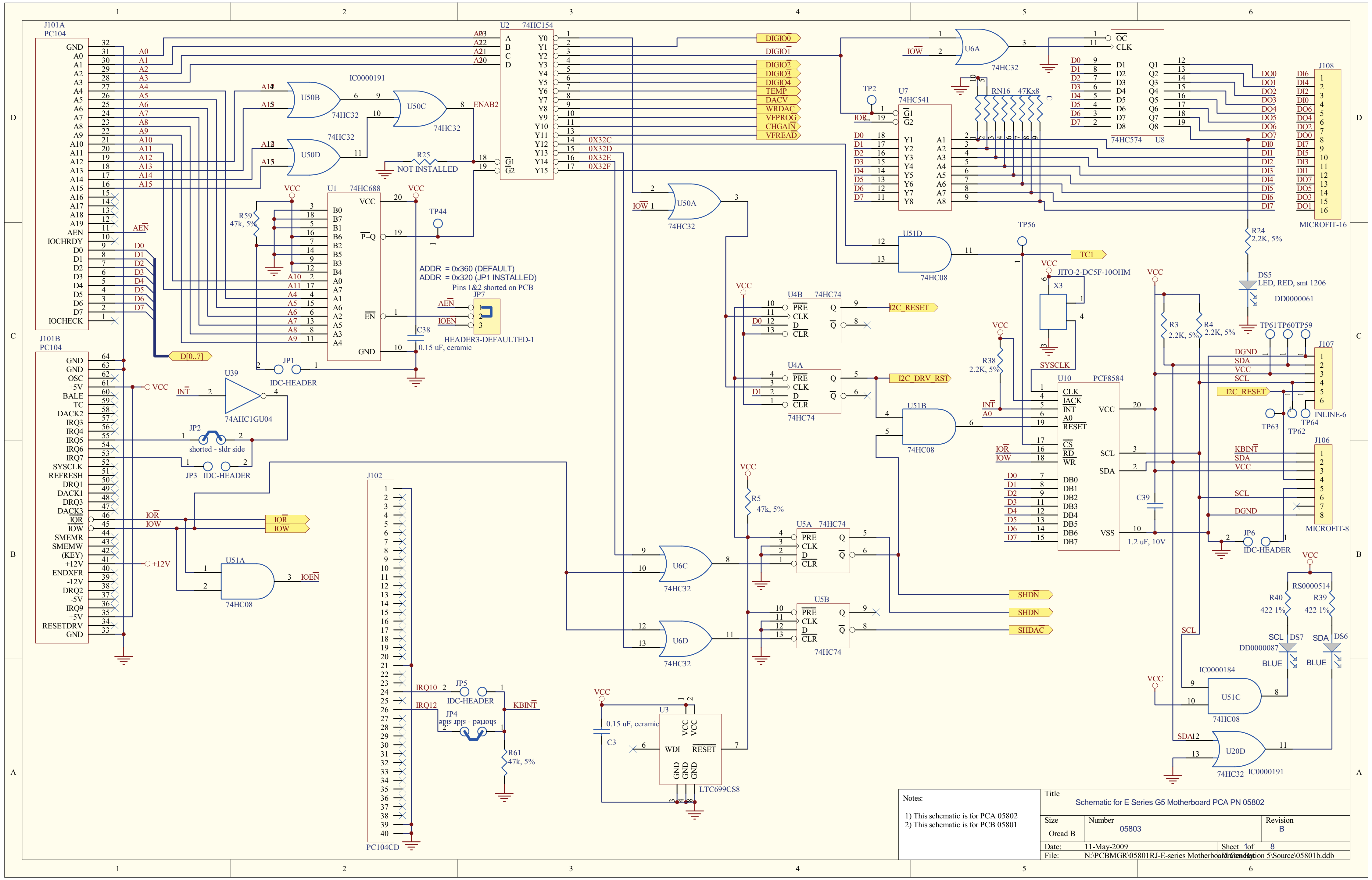
J101A
PC104
J101B
PC104
U2 74HC154
U50B 74HC32
U50C 74HC32
U50D 74HC32
IC0000191
ENAB2
R25 NOT INSTALLED
U1 74HC688
R59 47k, 5%
TP44
ADDR = 0x360 (DEFAULT)
ADDR = 0x320 (JP1 INSTALLED)
Pins 1&2 shorted on PCB
JP7 HEADER3-DEFAULTED-1
C38 0.15 uF, ceramic
JP1 IDC-HEADER
U39 74AHC1GU04
JP2 shorted - sldr side
JP3 IDC-HEADER
U51A 74HC08
IOEN
J102 PC104CD
IRQ10
IRQ12
JP5 IDC-HEADER
JP4 shorted - sldr side
KBINT
R61 47k, 5%
DIGIO0
DIGIO1
DIGIO2
DIGIO3
DIGIO4
TEMP
DACV
WRDAC
VFPROG
CHGAIN
VFREAD
0X32C
0X32D
0X32E
0X32F
U50A 74HC32
U6A 74HC32
U6C 74HC32
U6D 74HC32
U7 74HC541
TP2
RN16 47Kx8
U8 74HC574
J108 MICROFIT-16
U51D 74HC08
TP56
TC1
R24 2.2K, 5%
DS5 LED, RED, smt 1206
DD0000061
X3 JITO-2-DC5F-10OHM
SYSCLK
U4B 74HC74
I2C_RESET
U4A 74HC74
I2C_DRV_RST
U51B 74HC08
R38 2.2K, 5%
U10 PCF8584
R3 2.2K, 5%
R4 2.2K, 5%
C39 1.2 uF, 10V
J107 INLINE-6
J106 MICROFIT-8
TP59
TP60
TP61
TP62
TP63
TP64
JP6 IDC-HEADER
R5 47k, 5%
U5A 74HC74
U5B 74HC74
SHDN
SHDAC
C3 0.15 uF, ceramic
U3 LTC699CS8
R40 422 1%
R39 422 1%
RS0000514
DS7 BLUE
DS6 BLUE
DD0000087
U51C 74HC08
IC0000184
U20D 74HC32
D[0..7]
IOR
IOW
VCC
+12V

Notes:

1) This schematic is for PCA 05802
2) This schematic is for PCB 05801

Title: Schematic for E Series G5 Motherboard PCA PN 05802

Size	Number	Revision
Orcad B	05803	B

Date: 11-May-2009
Sheet 1 of 8
File: N:\PCBMGR\05801RJ-E-series Motherboard\Generation 5\Source\05801b.ddb
Drawn By:

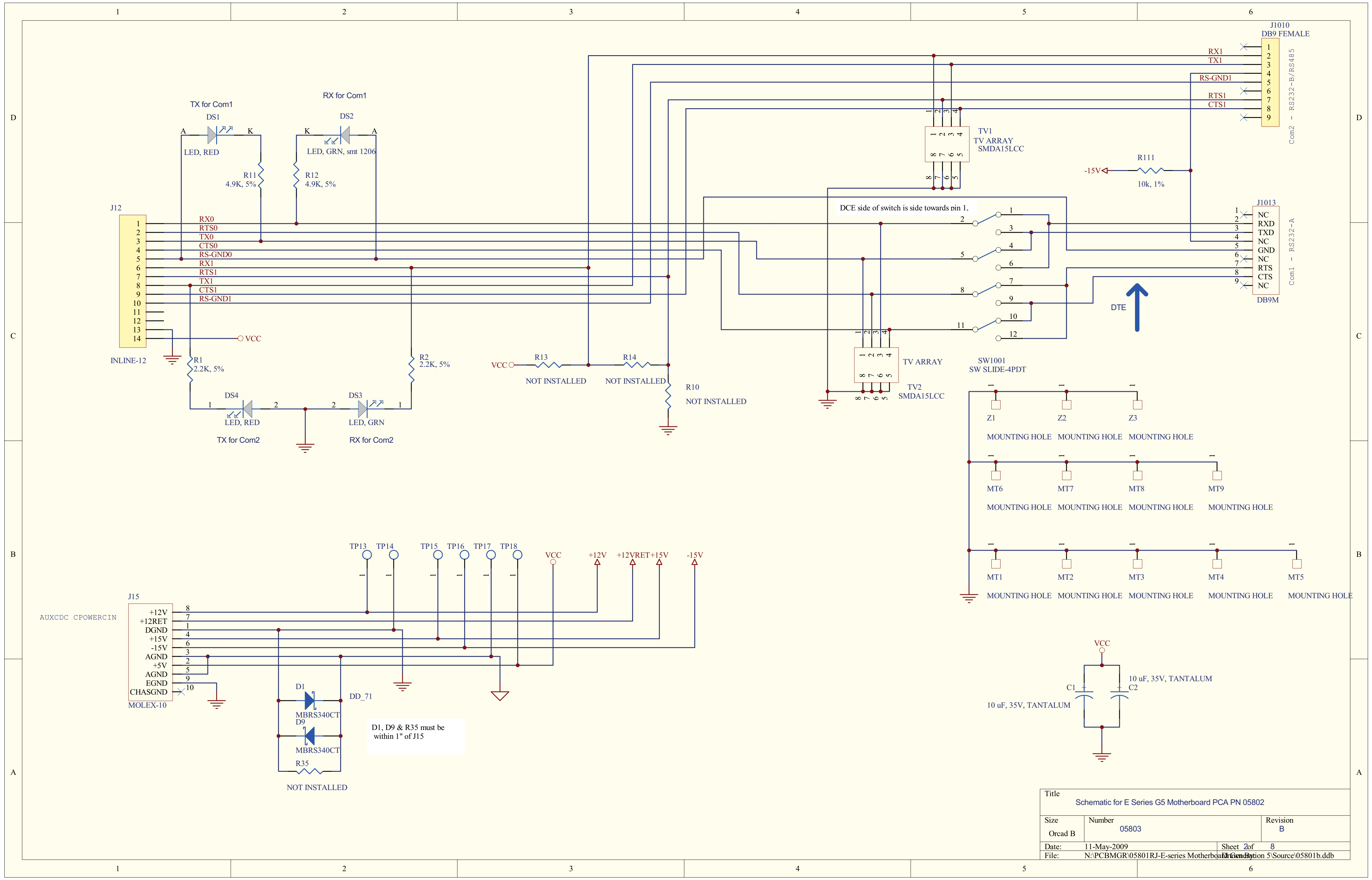
TX for Com1
DS1
A
K
LED, RED
R11
4.9K, 5%
RX for Com1
DS2
K
A
LED, GRN, smt 1206
R12
4.9K, 5%
J12
1 RX0
2 RTS0
3 TX0
4 CTS0
5 RS-GND0
6 RX1
7 RTS1
8 TX1
9 CTS1
10 RS-GND1
11
12
13
14
VCC
INLINE-12
R1
2.2K, 5%
R2
2.2K, 5%
DS4
LED, RED
TX for Com2
DS3
LED, GRN
RX for Com2
VCC
R13
NOT INSTALLED
R14
NOT INSTALLED
R10
NOT INSTALLED
J1010
DB9 FEMALE
RX1
TX1
RS-GND1
RTS1
CTS1
Com2 - RS232-B/RS485
TV1
TV ARRAY
SMDA15LCC
-15V
R111
10k, 1%
DCE side of switch is side towards pin 1.
J1013
NC
RXD
TXD
NC
GND
NC
RTS
CTS
NC
DB9M
Com1 - RS232-A
DTE
TV ARRAY
TV2
SMDA15LCC
SW1001
SW SLIDE-4PDT
Z1
Z2
Z3
MOUNTING HOLE
MT6
MT7
MT8
MT9
MT1
MT2
MT3
MT4
MT5
TP13
TP14
TP15
TP16
TP17
TP18
VCC
+12V
+12VRET
+15V
-15V
J15
AUXCDC CPOWERCIN
+12V
+12RET
DGND
+15V
-15V
AGND
+5V
AGND
EGND
CHASGND
MOLEX-10
D1
MBRS340CT
D9
MBRS340CT
DD_71
R35
NOT INSTALLED
D1, D9 & R35 must be within 1" of J15
VCC
C1
C2
10 uF, 35V, TANTALUM
10 uF, 35V, TANTALUM
Title
Schematic for E Series G5 Motherboard PCA PN 05802
Size
Orcad B
Number
05803
Revision
B
Date:
11-May-2009
Sheet 2 of 8
File:
N:\PCBMGR\05801RJ-E-series Motherboard Generation 5\Source\05801b.ddb
Drawn By:

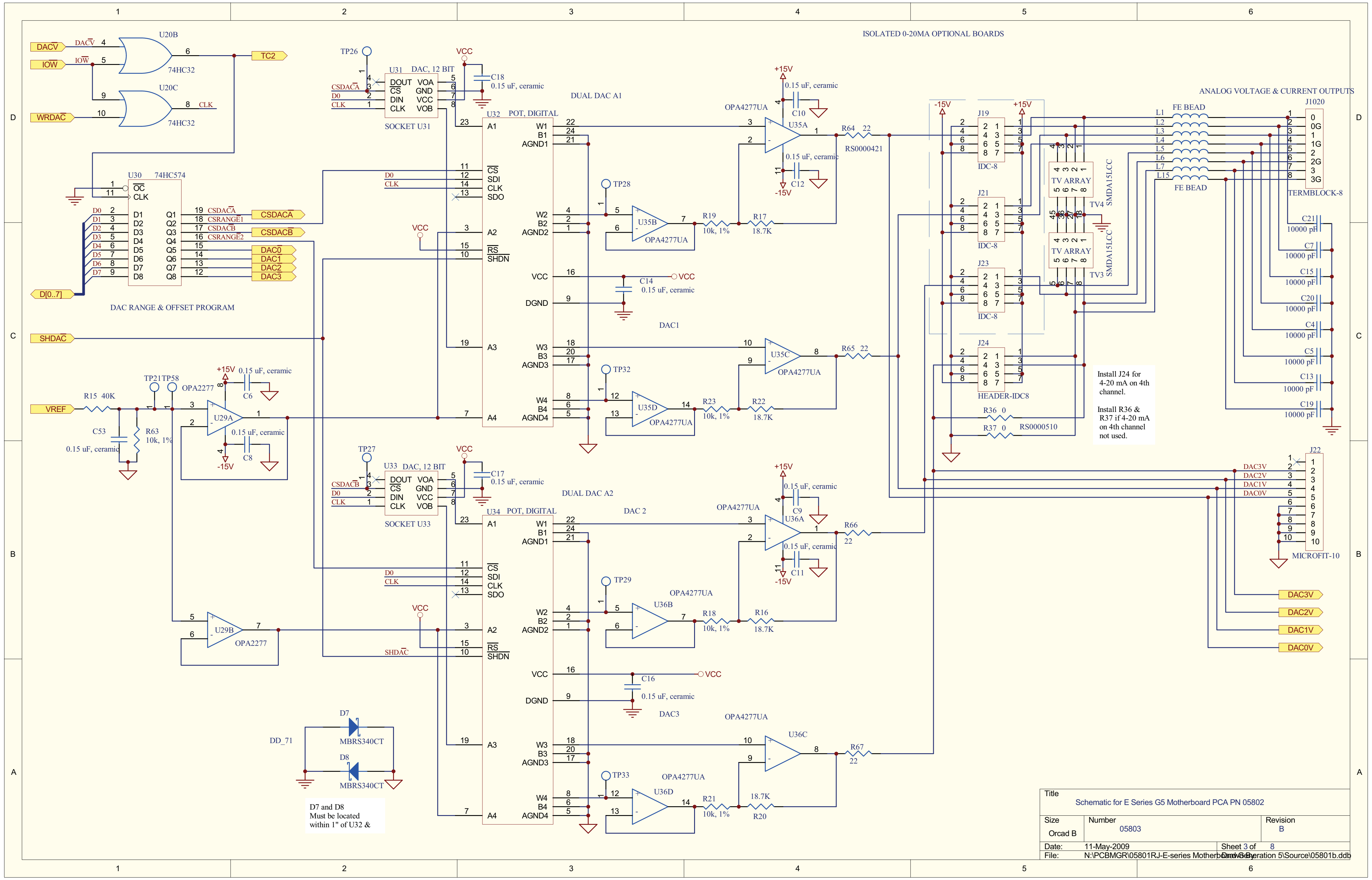

ISOLATED 0-20MA OPTIONAL BOARDS
ANALOG VOLTAGE & CURRENT OUTPUTS
DACV
IOW
WRDAC
U20B
74HC32
U20C
TC2
CLK
U30 74HC574
DAC RANGE & OFFSET PROGRAM
D[0..7]
CSDACA
CSRANGE1
CSDACB
CSRANGE2
DAC0
DAC1
DAC2
DAC3
SHDAC
VREF
R15 40K
C53
0.15 uF, ceramic
R63
10k, 1%
TP21
TP58
OPA2277
U29A
U29B
+15V
-15V
C6
C8
0.15 uF, ceramic
TP26
U31 DAC, 12 BIT
SOCKET U31
C18
0.15 uF, ceramic
VCC
U32 POT, DIGITAL
DUAL DAC A1
DAC1
TP28
TP32
U35A
U35B
U35C
U35D
OPA4277UA
C10
C12
C14
R19 10k, 1%
R17 18.7K
R23 10k, 1%
R22 18.7K
R64 22
R65 22
RS0000421
TP27
U33 DAC, 12 BIT
SOCKET U33
C17
U34 POT, DIGITAL
DUAL DAC A2
DAC 2
DAC3
TP29
TP33
U36A
U36B
U36C
U36D
C9
C11
C16
R18 10k, 1%
R16 18.7K
R21 10k, 1%
18.7K R20
R66 22
R67 22
D7
D8
MBRS340CT
DD_71
D7 and D8
Must be located
within 1" of U32 &
J19
J21
J23
J24
IDC-8
HEADER-IDC8
TV ARRAY
TV4
TV3
SMDA15LCC
R36 0
R37 0
RS0000510
Install J24 for
4-20 mA on 4th
channel.
Install R36 &
R37 if 4-20 mA
on 4th channel
not used.
L1
L2
L3
L4
L5
L6
L7
L15
FE BEAD
J1020
TERMBLOCK-8
0
0G
1
1G
2
2G
3
3G
C21
C7
C15
C20
C4
C5
C13
C19
10000 pF
J22
MICROFIT-10
DAC3V
DAC2V
DAC1V
DAC0V

Title
Schematic for E Series G5 Motherboard PCA PN 05802

Size	Number	Revision
Orcad B	05803	B

Date: 11-May-2009
Sheet 3 of 8
File: N:\PCBMGR\05801RJ-E-series Motherboard Generation 5\Source\05801b.ddb

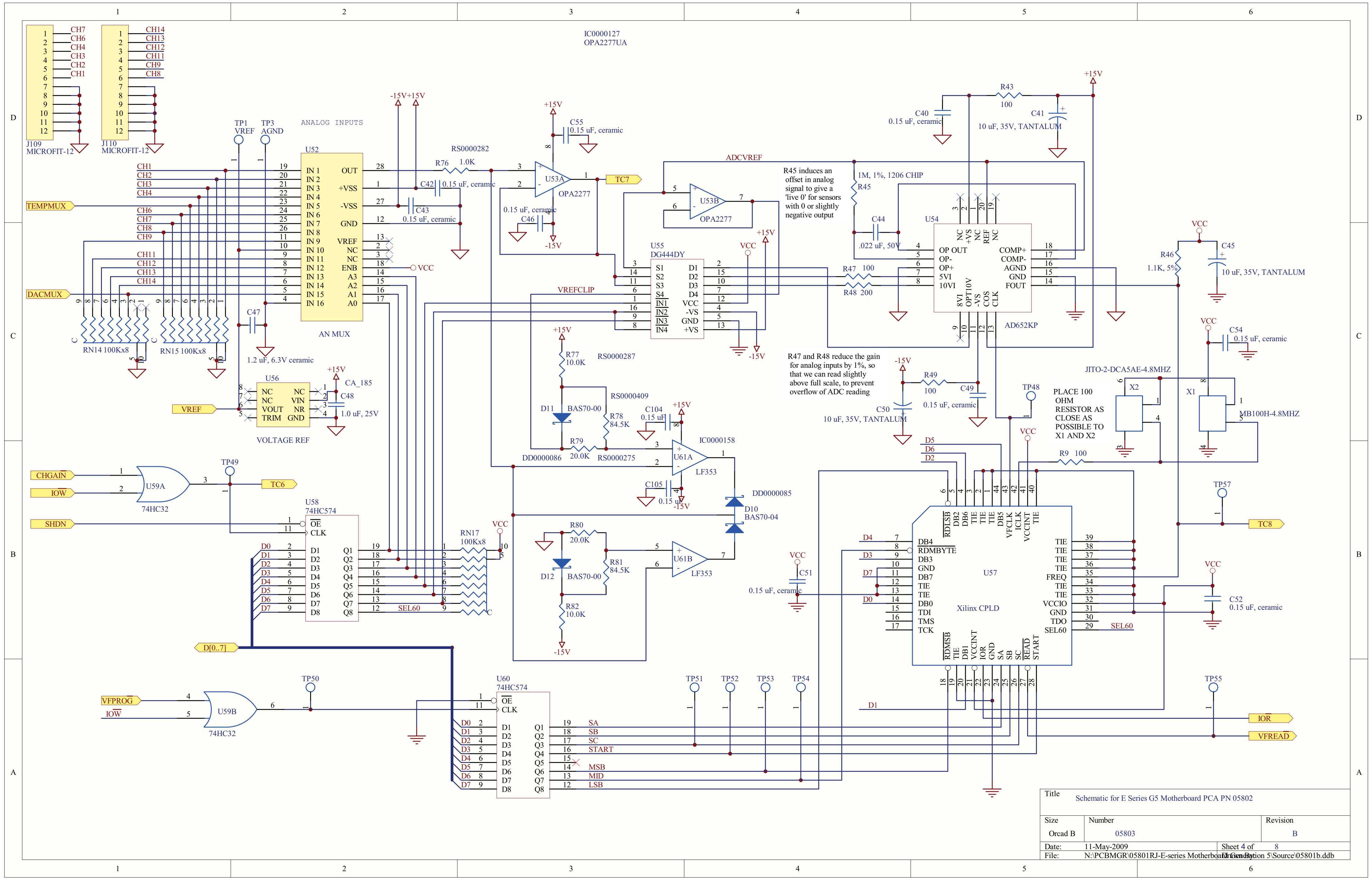
J109
MICROFIT-12
J110
MICROFIT-12
CH1
CH2
CH3
CH4
CH6
CH7
CH8
CH9
CH11
CH12
CH13
CH14
TEMPMUX
DACMUX
TP1
VREF
TP3
AGND
ANALOG INPUTS
U52
AN MUX
IN 1
IN 2
IN 3
IN 4
IN 5
IN 6
IN 7
IN 8
IN 9
IN 10
IN 11
IN 12
IN 13
IN 14
IN 15
IN 16
OUT
+VSS
-VSS
GND
VREF
NC
ENB
A3
A2
A1
A0
VCC
-15V
+15V
RN14 100Kx8
RN15 100Kx8
C47
1.2 uF, 6.3V ceramic
U56
VOLTAGE REF
VREF
VOUT
VIN
TRIM
GND
NR
CA_185
C48
1.0 uF, 25V
IC0000127
OPA2277UA
RS0000282
R76
1.0K
U53A
OPA2277
U53B
OPA2277
C55
0.15 uF, ceramic
C42
0.15 uF, ceramic
C43
0.15 uF, ceramic
C46
0.15 uF, ceramic
TC7
ADCVREF
VREFCLIP
U55
DG444DY
S1
S2
S3
S4
IN1
IN2
IN3
IN4
D1
D2
D3
D4
-VS
+VS
R45 induces an offset in analog signal to give a 'live 0' for sensors with 0 or slightly negative output
1M, 1%, 1206 CHIP
R45
C44
.022 uF, 50V
U54
AD652KP
OP OUT
OP-
OP+
5VI
10VI
COMP+
COMP-
AGND
FOUT
OPT10V
COS
CLK
8VI
R47 100
R48 200
R47 and R48 reduce the gain for analog inputs by 1%, so that we can read slightly above full scale, to prevent overflow of ADC reading
C40
0.15 uF, ceramic
R43
100
C41
10 uF, 35V, TANTALUM
R46
1.1K, 5%
C45
10 uF, 35V, TANTALUM
R49
100
C49
0.15 uF, ceramic
C50
10 uF, 35V, TANTALUM
TP48
PLACE 100 OHM RESISTOR AS CLOSE AS POSSIBLE TO X1 AND X2
JITO-2-DCA5AE-4.8MHZ
X2
X1
MB100H-4.8MHZ
C54
0.15 uF, ceramic
R9 100
RS0000287
R77
10.0K
D11
BAS70-00
RS0000409
R78
84.5K
C104
0.15 uF
R79
20.0K
DD0000086
RS0000275
IC0000158
U61A
LF353
C105
0.15 uF
DD0000085
D10
BAS70-04
R80
20.0K
D12
BAS70-00
R81
84.5K
U61B
LF353
R82
10.0K
CHGAIN
IOW
U59A
74HC32
TP49
TC6
SHDN
U58
74HC574
OE
CLK
RN17
100Kx8
SEL60
D[0..7]
VFPROG
IOW
U59B
74HC32
TP50
U60
74HC574
SA
SB
SC
START
MSB
MID
LSB
TP51
TP52
TP53
TP54
TP55
TP57
C51
0.15 uF, ceramic
U57
Xilinx CPLD
DB4
RDMBYTE
DB3
DB7
DB0
TDI
TMS
TCK
FREQ
VCCIO
TDO
RDLSB
RDMSB
VFCLK
IOR
READ
C52
0.15 uF, ceramic
TC8
IOR
VFREAD
Title
Schematic for E Series G5 Motherboard PCA PN 05802
Size
Orcad B
Number
05803
Revision
B
Date:
11-May-2009
Sheet 4 of 8
File:
N:\PCBMGR\05801RJ-E-series Motherboard Generation 5\Source\05801b.ddb
Drawn By:

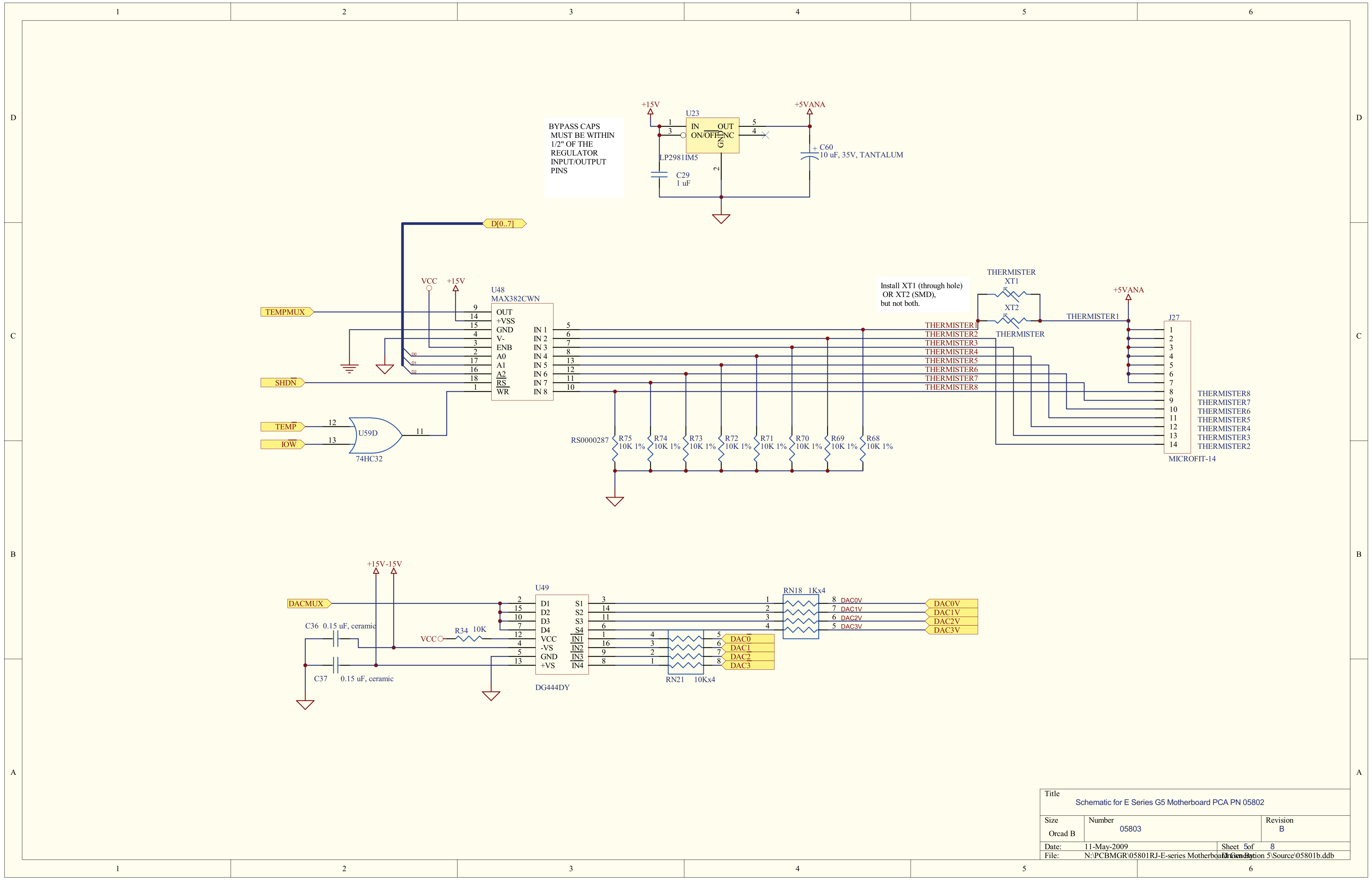
BYPASS CAPS MUST BE WITHIN 1/2" OF THE REGULATOR INPUT/OUTPUT PINS
+15V
U23
IN
OUT
ON/OFF
NC
GND
LP2981IM5
C29
1 uF
+5VANA
C60
10 uF, 35V, TANTALUM
D[0..7]
VCC
+15V
U48
MAX382CWN
OUT
+VSS
GND
V-
ENB
A0
A1
A2
RS
WR
IN 1
IN 2
IN 3
IN 4
IN 5
IN 6
IN 7
IN 8
TEMPMUX
SHDN
TEMP
IOW
U59D
74HC32
THERMISTER1
THERMISTER2
THERMISTER3
THERMISTER4
THERMISTER5
THERMISTER6
THERMISTER7
THERMISTER8
RS0000287
R75 10K 1%
R74 10K 1%
R73 10K 1%
R72 10K 1%
R71 10K 1%
R70 10K 1%
R69 10K 1%
R68 10K 1%
Install XT1 (through hole) OR XT2 (SMD), but not both.
THERMISTER
XT1
XT2
THERMISTER
+5VANA
J27
MICROFIT-14
+15V -15V
U49
DACMUX
C36 0.15 uF, ceramic
C37 0.15 uF, ceramic
VCC
R34 10K
D1
D2
D3
D4
VCC
-VS
GND
+VS
S1
S2
S3
S4
IN1
IN2
IN3
IN4
DG444DY
RN18 1Kx4
RN21 10Kx4
DAC0V
DAC1V
DAC2V
DAC3V
DAC0
DAC1
DAC2
DAC3
1
2
3
4
5
6
A
B
C
D

Title
Schematic for E Series G5 Motherboard PCA PN 05802

Size Orcad B
Number 05803
Revision B
Date: 11-May-2009
Sheet 5 of 8
File: N:\PCBMGR\05801RJ-E-series Motherboard Generation 5\Source\05801b.ddb

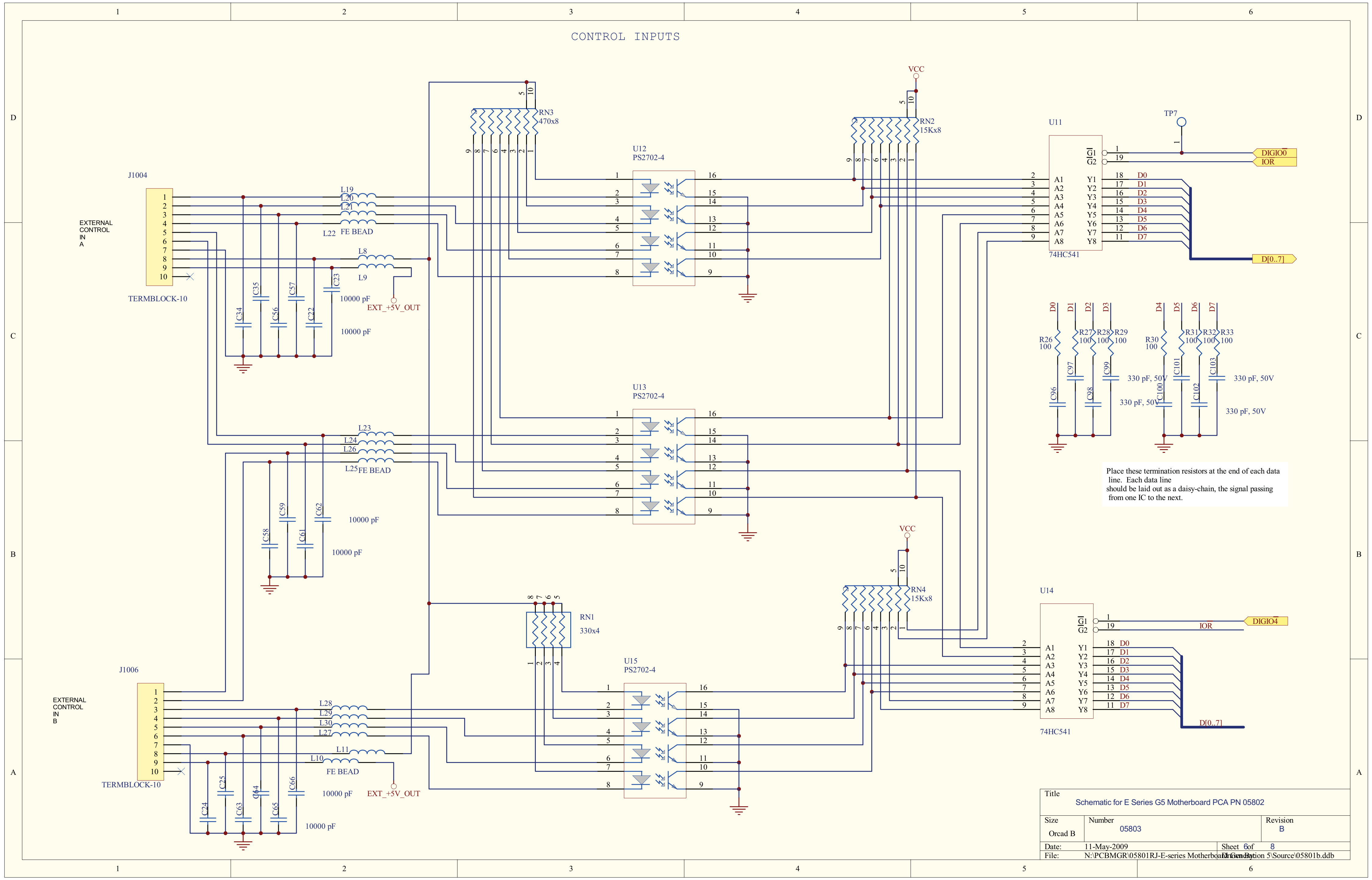
CONTROL INPUTS
J1004
EXTERNAL CONTROL IN A
TERMBLOCK-10
J1006
EXTERNAL CONTROL IN B
TERMBLOCK-10
L19
L20
L21
L22
FE BEAD
L8
L9
L23
L24
L26
L25
L28
L29
L30
L27
L11
L10
C34
C35
C56
C57
C22
C23
C58
C59
C61
C62
C24
C25
C63
C64
C65
C66
10000 pF
EXT_+5V_OUT
RN3
470x8
RN1
330x4
U12
PS2702-4
U13
PS2702-4
U15
PS2702-4
VCC
RN2
15Kx8
RN4
15Kx8
U11
U14
74HC541
TP7
DIGIO0
IOR
DIGIO4
D[0..7]
A1
A2
A3
A4
A5
A6
A7
A8
Y1
Y2
Y3
Y4
Y5
Y6
Y7
Y8
G1
G2
D0
D1
D2
D3
D4
D5
D6
D7
R26
R27
R28
R29
R30
R31
R32
R33
100
C96
C97
C98
C99
C100
C101
C102
C103
330 pF, 50V

Place these termination resistors at the end of each data line. Each data line should be laid out as a daisy-chain, the signal passing from one IC to the next.

Title
Schematic for E Series G5 Motherboard PCA PN 05802
Size: Orcad B
Number: 05803
Revision: B
Date: 11-May-2009
Sheet 6 of 8
File: N:\PCBMGR\05801RJ-E-series Motherboard Generation 5\Source\05801b.ddb
Drawn By:

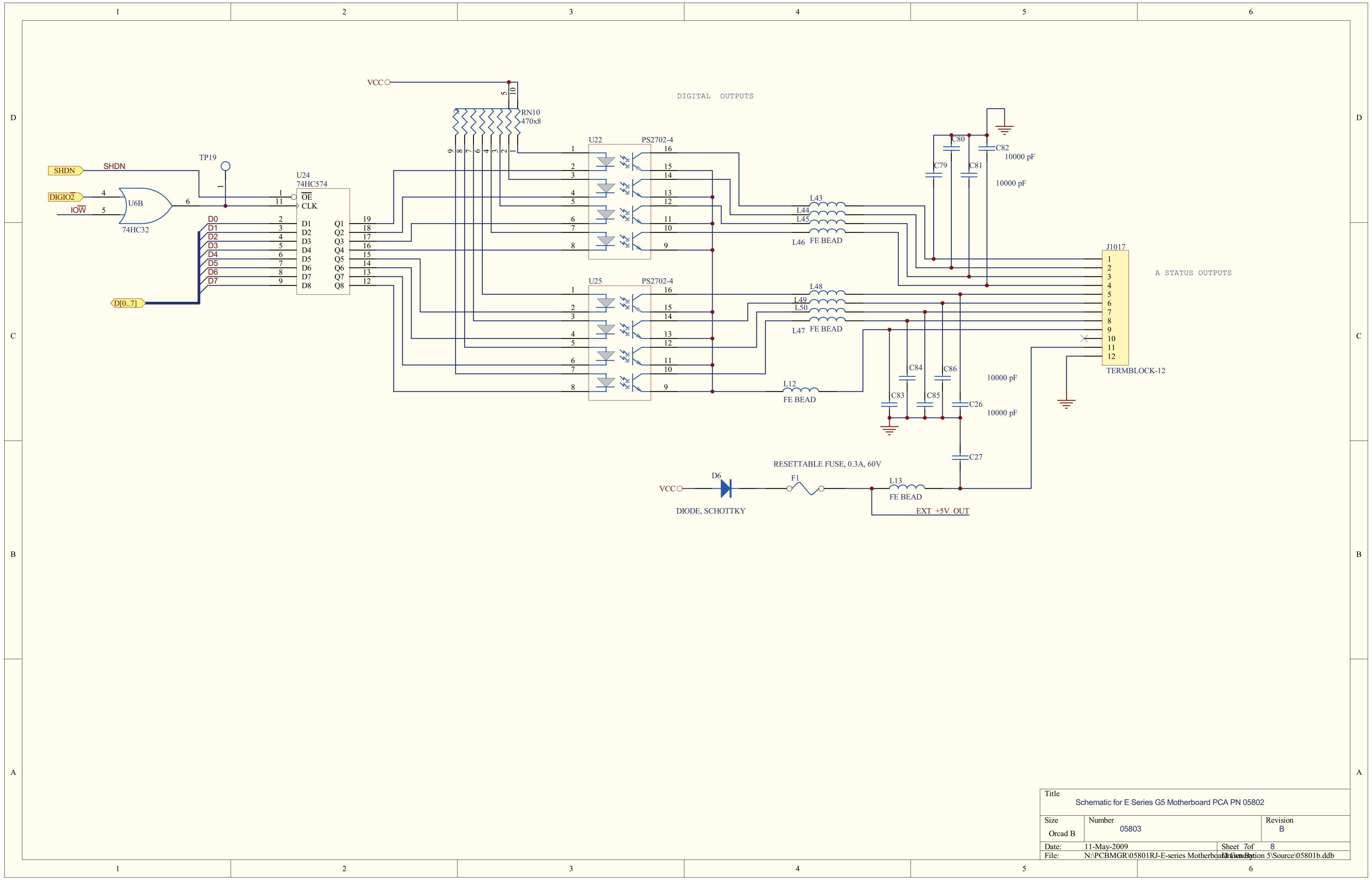
DIGITAL OUTPUTS
A STATUS OUTPUTS
VCC
RN10
470x8
U22
PS2702-4
U25
PS2702-4
U24
74HC574
OE
CLK
D1
D2
D3
D4
D5
D6
D7
D8
Q1
Q2
Q3
Q4
Q5
Q6
Q7
Q8
U6B
74HC32
TP19
SHDN
DIGIO2
IOW
D0
D1
D2
D3
D4
D5
D6
D7
D[0..7]
L43
L44
L45
L46
FE BEAD
L48
L49
L50
L47
FE BEAD
L12
FE BEAD
C79
C80
C81
C82
10000 pF
10000 pF
C83
C84
C85
C86
C26
C27
10000 pF
10000 pF
J1017
TERMBLOCK-12
D6
DIODE, SCHOTTKY
RESETTABLE FUSE, 0.3A, 60V
F1
L13
FE BEAD
EXT +5V OUT

Title
Schematic for E Series G5 Motherboard PCA PN 05802

Size: Orcad B
Number: 05803
Revision: B

Date: 11-May-2009
Sheet 7 of 8
File: N:\PCBMGR\05801RJ-E-series Motherboard\Generation 5\Source\05801b.ddb
Drawn By:

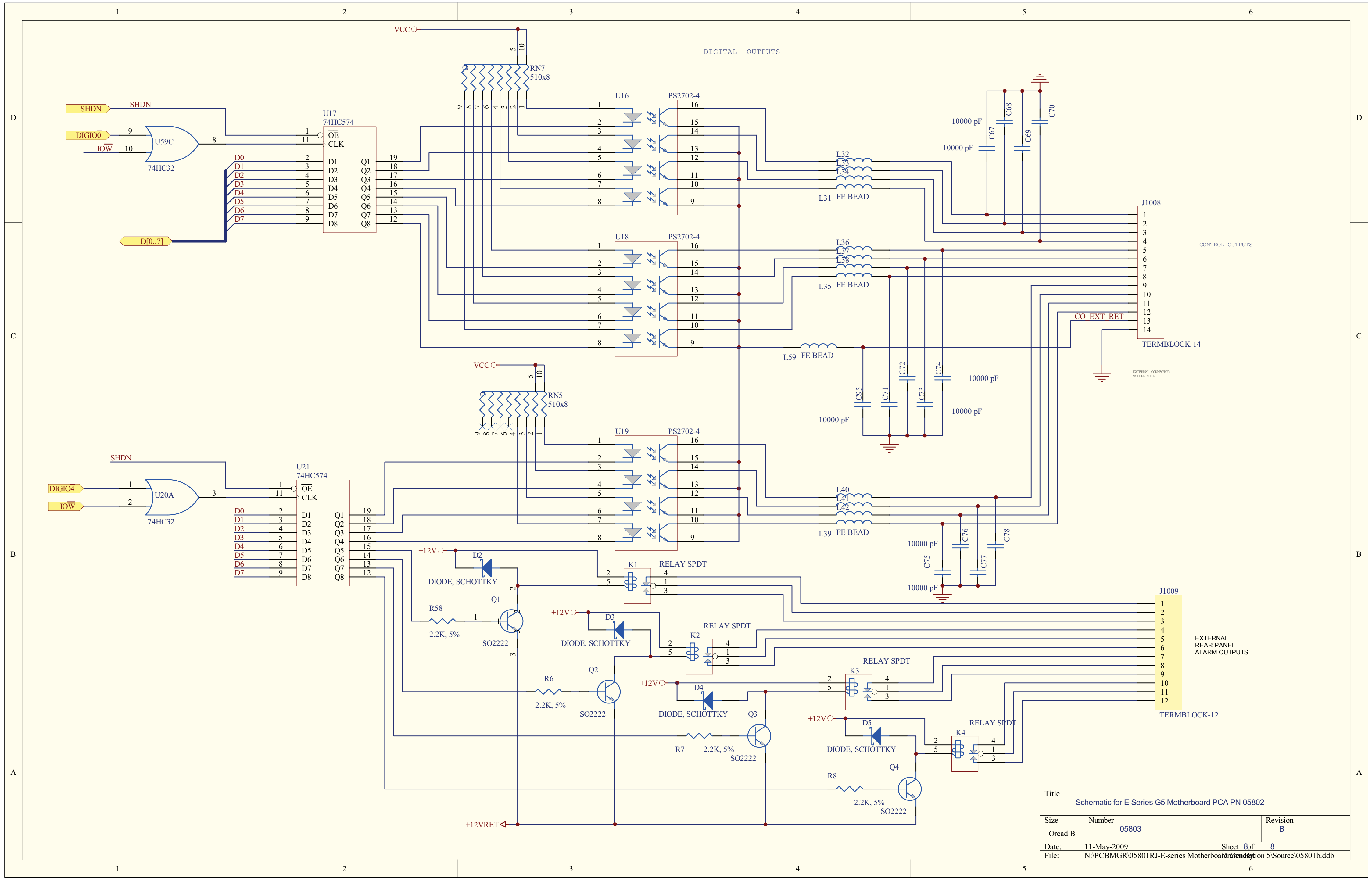
DIGITAL OUTPUTS
VCC
RN7
510x8
RN5
510x8
SHDN
DIGIO0
IOW
U59C
74HC32
U17
74HC574
OE
CLK
D0
D1
D2
D3
D4
D5
D6
D7
D[0..7]
Q1
Q2
Q3
Q4
Q5
Q6
Q7
Q8
U16
PS2702-4
U18
PS2702-4
U19
PS2702-4
L31
L32
L33
L34
FE BEAD
L35
L36
L37
L38
FE BEAD
L59 FE BEAD
L39
L40
L41
L42
FE BEAD
C67
C68
C69
C70
C71
C72
C73
C74
C75
C76
C77
C78
C95
10000 pF
J1008
TERMBLOCK-14
CONTROL OUTPUTS
CO_EXT_RET
EXTERNAL CONNECTOR SOLDER SIDE
DIGIO4
U20A
74HC32
U21
74HC574
+12V
D2
D3
D4
D5
DIODE, SCHOTTKY
K1
K2
K3
K4
RELAY SPDT
Q1
Q2
Q3
Q4
SO2222
R58
R6
R7
R8
2.2K, 5%
+12VRET
J1009
TERMBLOCK-12
EXTERNAL
REAR PANEL
ALARM OUTPUTS
1
2
3
4
5
6
A
B
C
D

Title
Schematic for E Series G5 Motherboard PCA PN 05802

Size	Number	Revision
Orcad B	05803	B

Date: 11-May-2009
Sheet 8 of 8
File: N:\PCBMGR\05801RJ-E-series Motherboard Generation 5\Source\05801b.ddb
Drawn By:

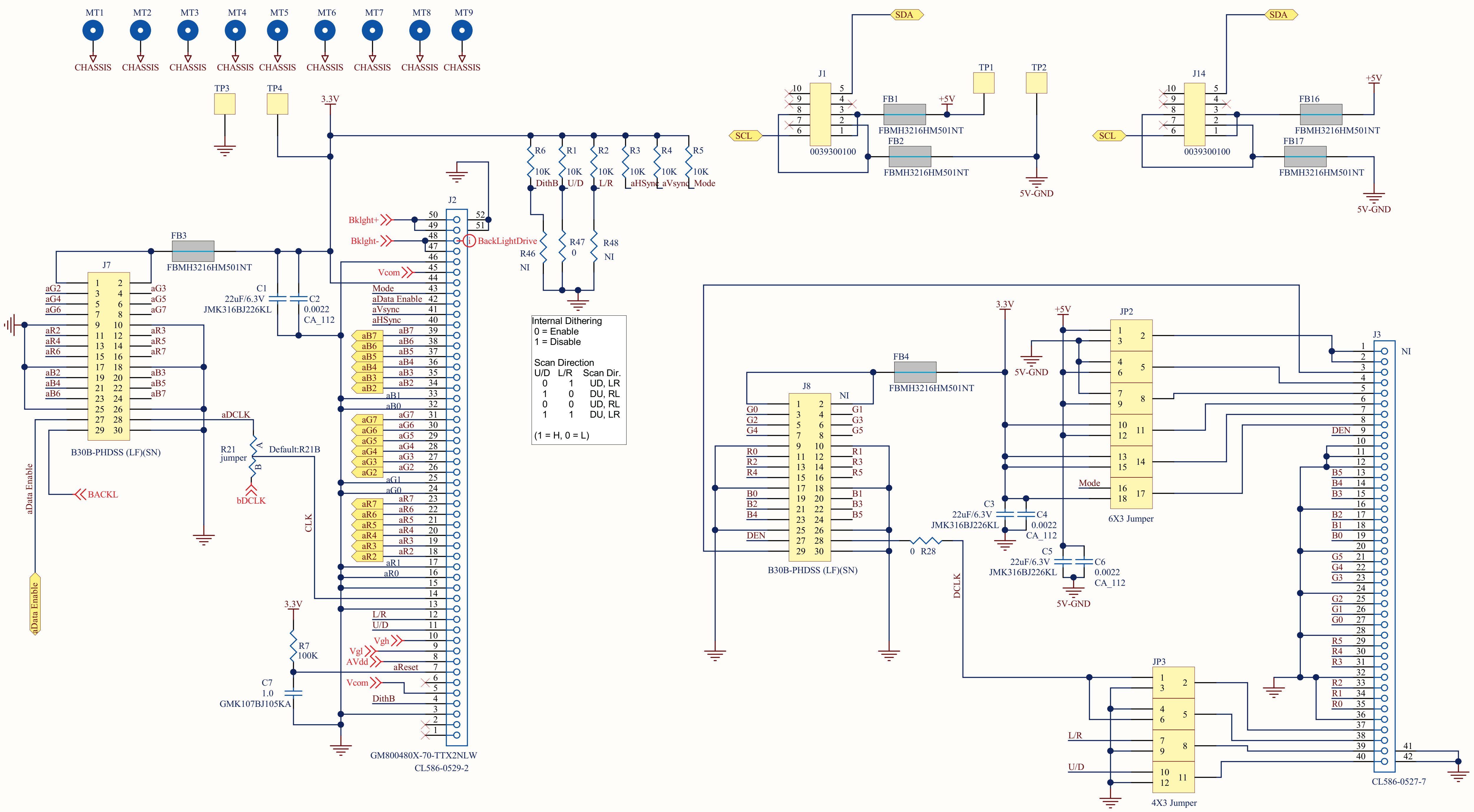
MT1
MT2
MT3
MT4
MT5
MT6
MT7
MT8
MT9
CHASSIS
TP3
TP4
TP1
TP2
3.3V
+5V
5V-GND
SDA
SCL
J1
J14
0039300100
FB1
FB2
FB16
FB17
FB3
FB4
FBMH3216HM501NT
R6
R1
R2
R3
R4
R5
10K
DithB
U/D
L/R
aHSync
aVsync
Mode
R46
NI
R47
0
R48
NI
Internal Dithering
0 = Enable
1 = Disable
Scan Direction
U/D L/R Scan Dir.
0 1 UD, LR
1 0 DU, RL
0 0 UD, RL
1 1 DU, LR
(1 = H, 0 = L)
J2
Bklght+
Bklght-
BackLightDrive
Vcom
aData Enable
aVsync
aHSync
aB7
aB6
aB5
aB4
aB3
aB2
aB1
aB0
aG7
aG6
aG5
aG4
aG3
aG2
aG1
aG0
aR7
aR6
aR5
aR4
aR3
aR2
aR1
aR0
L/R
U/D
Vgh
Vgl
AVdd
aReset
DithB
GM800480X-70-TTX2NLW
CL586-0529-2
J7
B30B-PHDSS (LF)(SN)
C1
22uF/6.3V
JMK316BJ226KL
C2
0.0022
CA_112
aDCLK
R21
jumper
Default:R21B
bDCLK
BACKL
aData Enable
CLK
R7
100K
C7
1.0
GMK107BJ105KA
J8
G0
G1
G2
G3
G4
G5
R0
R1
R2
R3
R4
R5
B0
B1
B2
B3
B4
B5
DEN
C3
C4
C5
C6
0
R28
DCLK
JP2
6X3 Jumper
JP3
4X3 Jumper
J3
NI
CL586-0527-7

Make	Model	JP2	JP3
FEMA	GM800480W	1-2, 4-5, 7-8, 10-11, 13-14, 16-17	1-2, 4-5, 7-8, 10-11
Data Image	FG0700A0DSWBG01	3-2, 6-5, 9-8, 12-11, 15-14, 18-17	2-3, 5-6, 8-9, 11-12
United Radiant Tech.	UMSH-8173MD-1T	2-3, 4/5/6 NC, 7/8/9 NC, 10-11, 13-14, 16/17/18 NC	2-3, 5-6, 8-9, 11-12

Title
GUI Interface
Size B
Number 06698
Revision D
Date: 6/24/2010
Sheet 1 of 4
File: N:\PCBMGR\..\06696.P1.R3.schdoc
Drawn By: RT

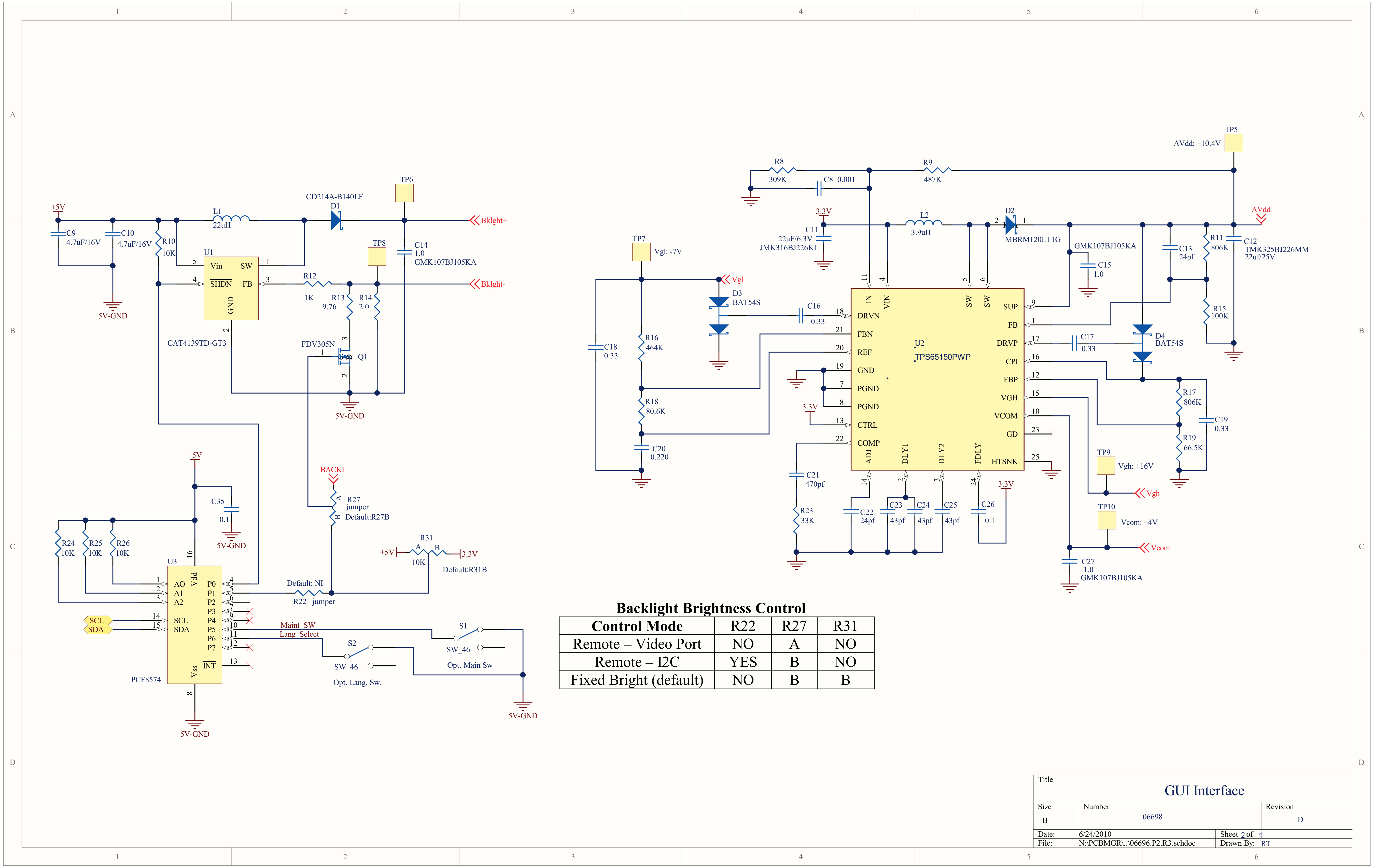
+5V
C9
4.7uF/16V
C10
4.7uF/16V
R10
10K
5V-GND
L1
22uH
CD214A-B140LF
D1
TP6
Bklght+
Bklght-
U1
Vin
SW
SHDN
FB
GND
CAT4139TD-GT3
TP8
C14
1.0
GMK107BJ105KA
R12
1K
R13
9.76
R14
2.0
FDV305N
Q1
5V-GND
BACKL
R27
jumper
Default:R27B
R31
10K
+5V
3.3V
Default:R31B
+5V
C35
0.1
5V-GND
R24
10K
R25
10K
R26
10K
U3
AO
A1
A2
SCL
SDA
Vdd
Vss
P0
P1
P2
P3
P4
P5
P6
P7
INT
PCF8574
5V-GND
Default: NI
R22 jumper
Maint_SW
Lang_Select
S1
SW_46
Opt. Main Sw
S2
SW_46
Opt. Lang. Sw.
5V-GND
TP7
Vgl: -7V
Vgl
D3
BAT54S
C16
0.33
C18
0.33
R16
464K
R18
80.6K
C20
0.220
R8
309K
C8 0.001
R9
487K
TP5
AVdd: +10.4V
3.3V
C11
22uF/6.3V
JMK316BJ226KL
L2
3.9uH
D2
MBRM120LT1G
AVdd
GMK107BJ105KA
C15
1.0
C13
24pf
R11
806K
C12
TMK325BJ226MM
22uf/25V
R15
100K
U2
TPS65150PWP
IN
VIN
SW
SW
DRVN
FBN
REF
GND
PGND
PGND
CTRL
COMP
ADJ
DLY1
DLY2
FDLY
SUP
FB
DRVP
CPI
FBP
VGH
VCOM
GD
HTSNK
C17
0.33
D4
BAT54S
R17
806K
C19
0.33
R19
66.5K
TP9
Vgh: +16V
Vgh
TP10
Vcom: +4V
Vcom
C27
1.0
GMK107BJ105KA
3.3V
C21
470pf
R23
33K
C22
24pf
C23
43pf
C24
43pf
C25
43pf
C26
0.1
3.3V

Backlight Brightness Control

Control Mode	R22	R27	R31
Remote – Video Port	NO	A	NO
Remote – I2C	YES	B	NO
Fixed Bright (default)	NO	B	B

Title
GUI Interface
Size B
Number 06698
Revision D
Date: 6/24/2010
Sheet 2 of 4
File: N:\PCBMGR\..\06696.P2.R3.schdoc
Drawn By: RT

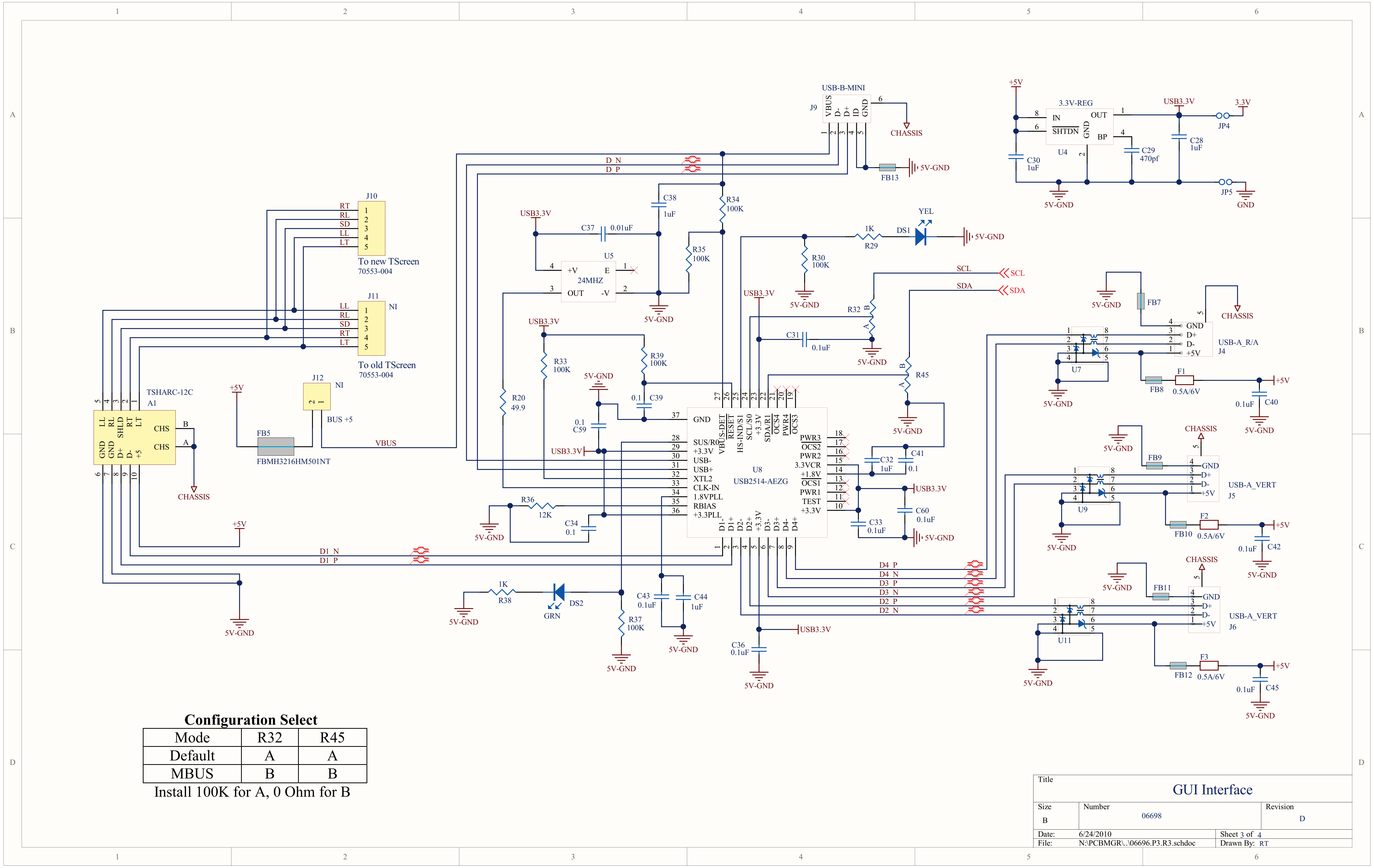
USB-B-MINI
J9
VBUS
D-
D+
ID
GND
CHASSIS
FB13
5V-GND
D N
D P
+5V
3.3V-REG
IN
OUT
SHTDN
GND
BP
U4
C30
1uF
C29
470pf
C28
1uF
USB3.3V
3.3V
JP4
JP5
GND
J10
RT
RL
SD
LL
LT
To new TScreen
70553-004
J11
NI
To old TScreen
70553-004
C38
1uF
R34
100K
C37
0.01uF
U5
+V
E
24MHZ
OUT
-V
R35
100K
YEL
1K
R29
DS1
R30
100K
SCL
SDA
R32
A
B
C31
0.1uF
R45
FB7
USB-A_R/A
J4
D+
D-
U7
FB8
F1
0.5A/6V
C40
0.1uF
TSHARC-12C
A1
LL
RL
SHLD
RT
LT
GND
D+
D-
+5
CHS
J12
BUS +5
FB5
FBMH3216HM501NT
VBUS
R33
100K
R39
100K
R20
49.9
C39
0.1
C59
USB2514-AEZG
U8
SUS/R0
+3.3V
USB-
USB+
XTL2
CLK-IN
1.8VPLL
RBIAS
+3.3PLL
VBUS-DET
RESET
HS-IND/S1
SCL/S0
SDA/R1
OCS4
PWR4
OCS3
PWR3
OCS2
PWR2
3.3VCR
+1.8V
OCS1
PWR1
TEST
D1-
D1+
D2-
D2+
D3-
D3+
D4-
D4+
R36
12K
C34
0.1
C32
1uF
C41
0.1
C60
0.1uF
C33
0.1uF
FB9
USB-A_VERT
J5
U9
FB10
F2
0.5A/6V
C42
FB11
J6
U11
FB12
F3
C45
D1 N
D1 P
D4 P
D4 N
D3 P
D3 N
D2 P
D2 N
1K
R38
DS2
GRN
R37
100K
C43
0.1uF
C44
1uF
C36
0.1uF

Configuration Select

Mode	R32	R45
Default	A	A
MBUS	B	B

Install 100K for A, 0 Ohm for B

Title
GUI Interface
Size B
Number 06698
Revision D
Date: 6/24/2010
File: N:\PCBMGR\..\06696.P3.R3.schdoc
Sheet 3 of 4
Drawn By: RT

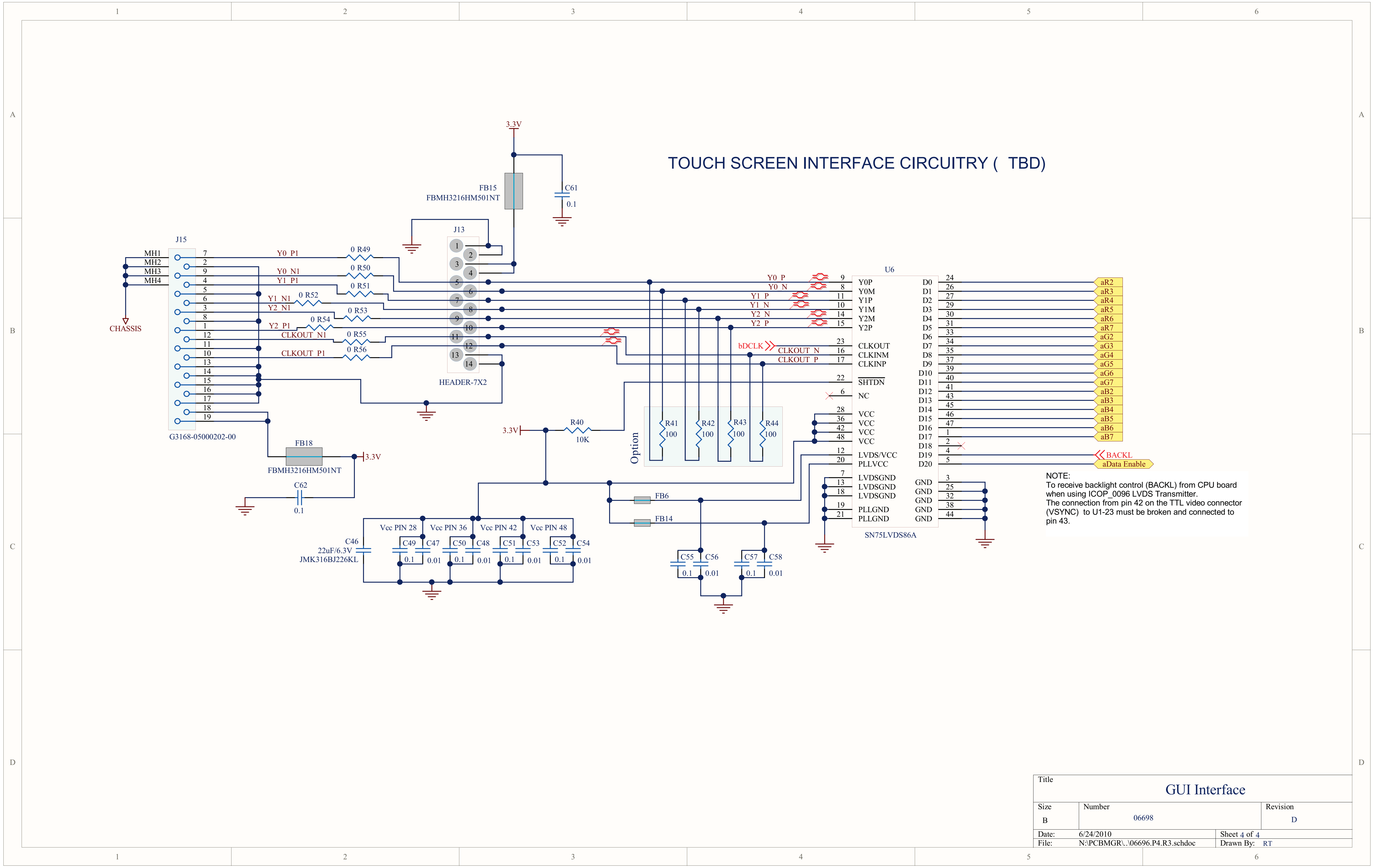
TOUCH SCREEN INTERFACE CIRCUITRY (TBD)
3.3V
FB15
FBMH3216HM501NT
C61
0.1
J13
HEADER-7X2
J15
MH1
MH2
MH3
MH4
CHASSIS
G3168-05000202-00
Y0_P1
Y0_N1
Y1_P1
Y1_N1
Y2_N1
Y2_P1
CLKOUT_N1
CLKOUT_P1
0 R49
0 R50
0 R51
0 R52
0 R53
0 R54
0 R55
0 R56
FB18
FBMH3216HM501NT
C62
0.1
R40
10K
Option
R41 100
R42 100
R43 100
R44 100
U6
SN75LVDS86A
Y0_P
Y0_N
Y1_P
Y1_N
Y2_N
Y2_P
bDCLK
CLKOUT_N
CLKOUT_P
Y0P
Y0M
Y1P
Y1M
Y2M
Y2P
CLKOUT
CLKINM
CLKINP
SHTDN
NC
VCC
LVDS/VCC
PLLVCC
LVDSGND
PLLGND
GND
D0
D1
D2
D3
D4
D5
D6
D7
D8
D9
D10
D11
D12
D13
D14
D15
D16
D17
D18
D19
D20
aR2
aR3
aR4
aR5
aR6
aR7
aG2
aG3
aG4
aG5
aG6
aG7
aB2
aB3
aB4
aB5
aB6
aB7
BACKL
aData Enable
FB6
FB14
Vcc PIN 28
Vcc PIN 36
Vcc PIN 42
Vcc PIN 48
C46
22uF/6.3V
JMK316BJ226KL
C49 0.1
C47 0.01
C50 0.1
C48 0.01
C51 0.1
C53 0.01
C52 0.1
C54 0.01
C55 0.1
C56 0.01
C57 0.1
C58 0.01
1
2
3
4
5
6
A
B
C
D

NOTE:
To receive backlight control (BACKL) from CPU board when using ICOP_0096 LVDS Transmitter.
The connection from pin 42 on the TTL video connector (VSYNC) to U1-23 must be broken and connected to pin 43.

Title
GUI Interface
Size B
Number 06698
Revision D
Date: 6/24/2010
Sheet 4 of 4
File: N:\PCBMGR\..\06696.P4.R3.schdoc
Drawn By: RT

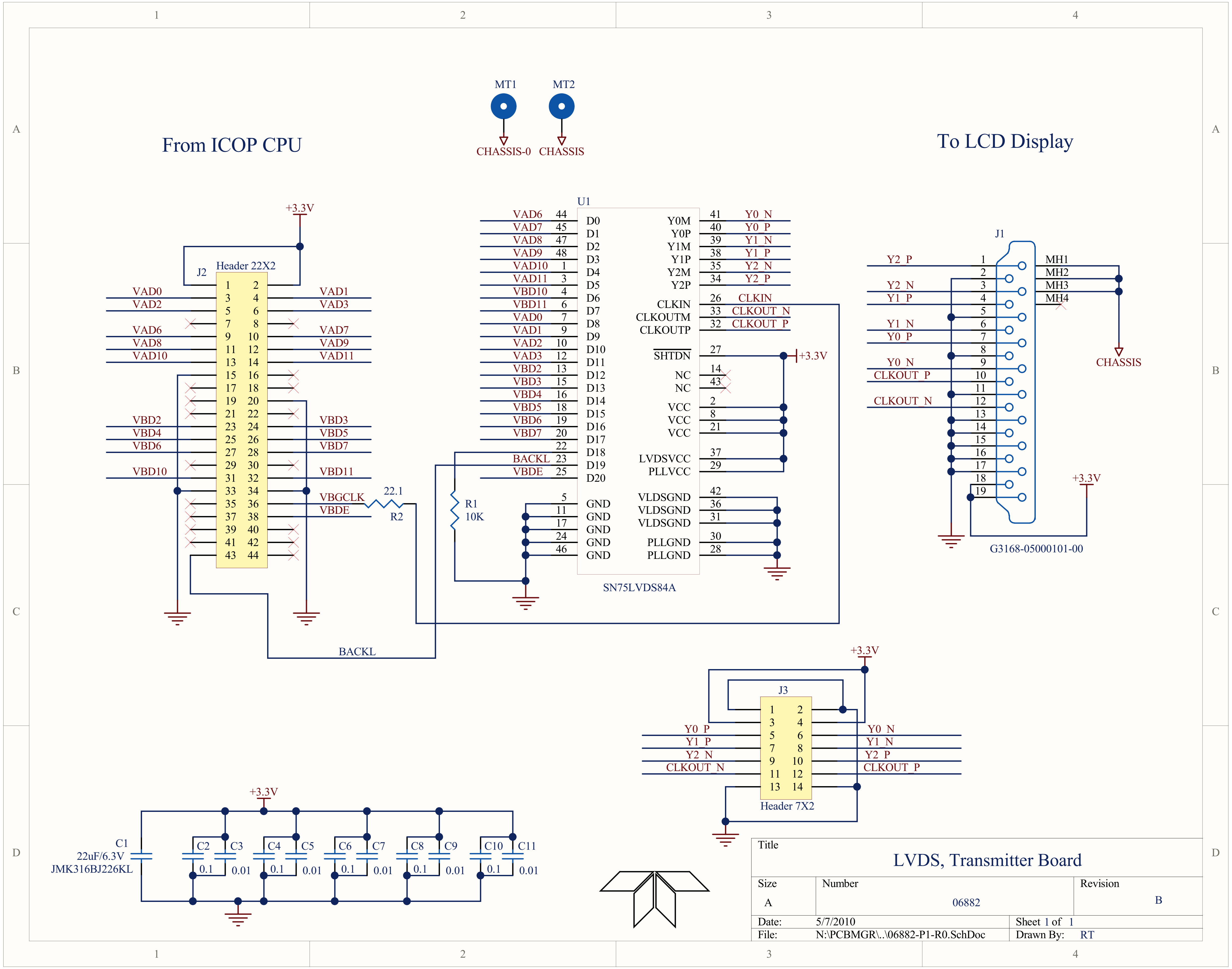
From ICOP CPU
To LCD Display
MT1
MT2
CHASSIS-0
CHASSIS
+3.3V
J2
Header 22X2
VAD0
VAD1
VAD2
VAD3
VAD6
VAD7
VAD8
VAD9
VAD10
VAD11
VBD2
VBD3
VBD4
VBD5
VBD6
VBD7
VBD10
VBD11
VBGCLK
VBDE
22.1
R2
R1
10K
BACKL
U1
SN75LVDS84A
D0
D1
D2
D3
D4
D5
D6
D7
D8
D9
D10
D11
D12
D13
D14
D15
D16
D17
D18
D19
D20
GND
Y0M
Y0P
Y1M
Y1P
Y2M
Y2P
CLKIN
CLKOUTM
CLKOUTP
SHTDN
NC
VCC
LVDSVCC
PLLVCC
VLDSGND
PLLGND
Y0_N
Y0_P
Y1_N
Y1_P
Y2_N
Y2_P
CLKIN
CLKOUT_N
CLKOUT_P
J1
MH1
MH2
MH3
MH4
G3168-05000101-00
J3
Header 7X2
C1
22uF/6.3V
JMK316BJ226KL
C2
C3
C4
C5
C6
C7
C8
C9
C10
C11
0.1
0.01
1
2
3
4
A
B
C
D

Title
LVDS, Transmitter Board
Size A
Number 06882
Revision B
Date: 5/7/2010
Sheet 1 of 1
File: N:\PCBMGR\..\06882-P1-R0.SchDoc
Drawn By: RT

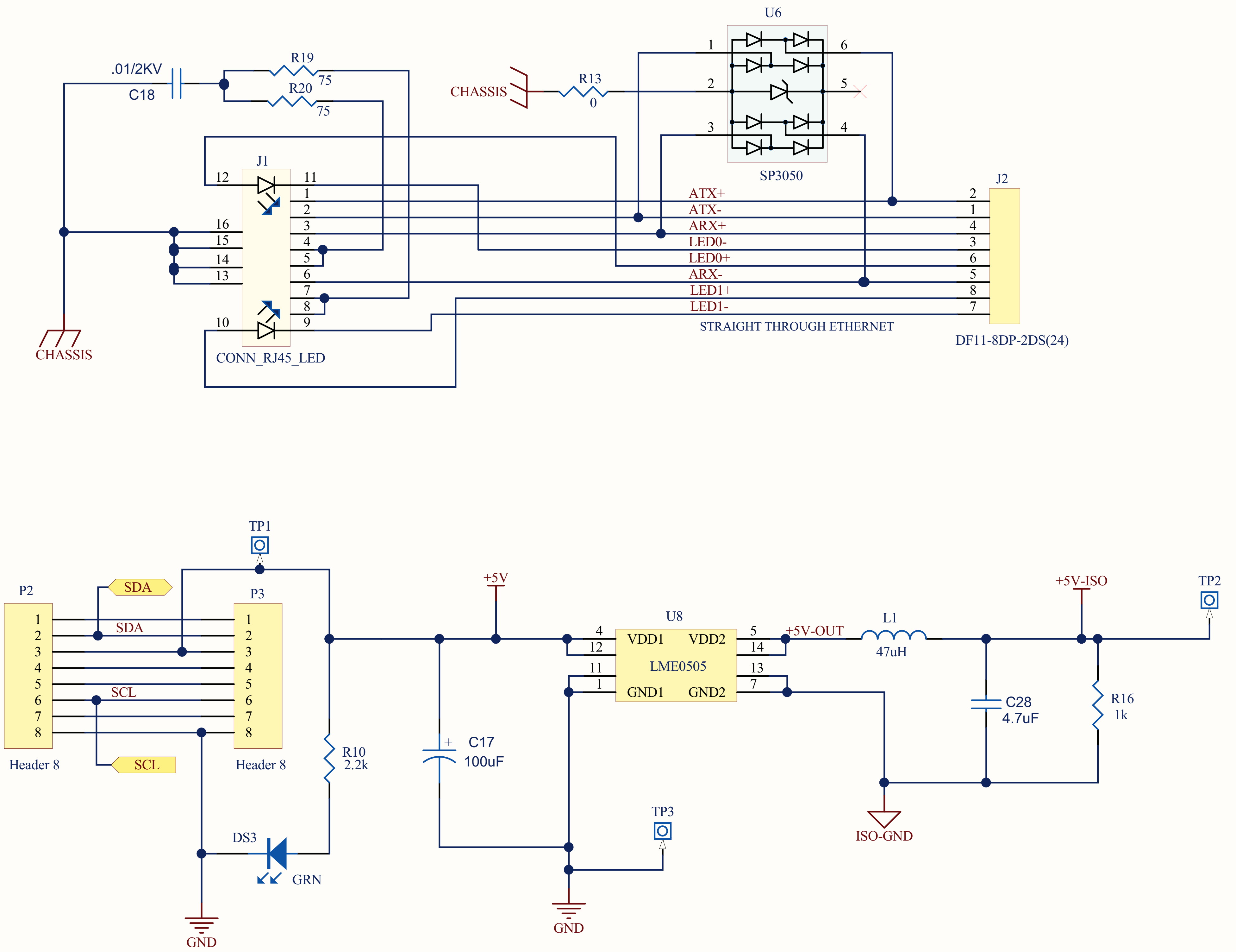
U6
SP3050
CHASSIS
R13
0
.01/2KV
C18
R19
75
R20
75
J1
CONN_RJ45_LED
CHASSIS
J2
DF11-8DP-2DS(24)
ATX+
ATX-
ARX+
LED0-
LED0+
ARX-
LED1+
LED1-
STRAIGHT THROUGH ETHERNET
TP1
P2
Header 8
SDA
SDA
SCL
SCL
P3
Header 8
R10
2.2k
DS3
GRN
GND
+5V
C17
100uF
U8
VDD1
VDD2
LME0505
GND1
GND2
+5V-OUT
TP3
GND
L1
47uH
+5V-ISO
TP2
C28
4.7uF
R16
1k
ISO-GND

DCN:6092

PRINTED DOCUMENTS ARE UNCONTROLLED

Title
Auxiliary I/O Board (PWR-ETHERNET)

Size	Number	Revision
A	06731	B

Date: 5/6/2011 Sheet 1 of 3

File: N:\PCBMGR\..\06731-1_ETHERNET.SchDoc Drawn By: RT

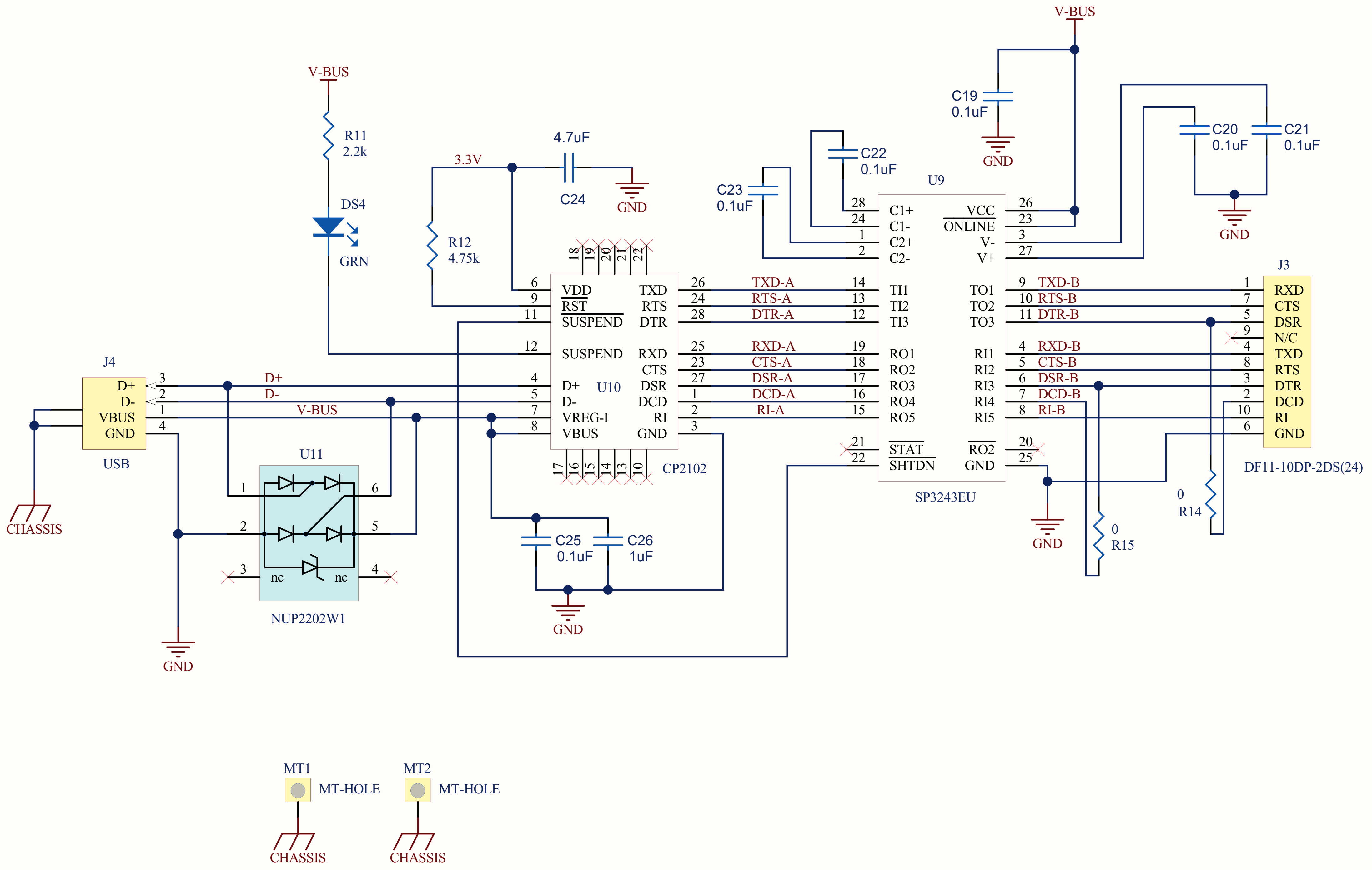
V-BUS
R11
2.2k
DS4
GRN
3.3V
4.7uF
C24
GND
R12
4.75k
U10
CP2102
VDD
RST
SUSPEND
SUSPEND
D+
D-
VREG-I
VBUS
TXD
RTS
DTR
RXD
CTS
DSR
DCD
RI
GND
TXD-A
RTS-A
DTR-A
RXD-A
CTS-A
DSR-A
DCD-A
RI-A
J4
D+
D-
VBUS
GND
USB
CHASSIS
U11
NUP2202W1
nc
nc
C25
0.1uF
C26
1uF
C19
0.1uF
C22
0.1uF
C23
0.1uF
C20
0.1uF
C21
0.1uF
U9
SP3243EU
C1+
C1-
C2+
C2-
TI1
TI2
TI3
RO1
RO2
RO3
RO4
RO5
STAT
SHTDN
VCC
ONLINE
V-
V+
TO1
TO2
TO3
RI1
RI2
RI3
RI4
RI5
RO2
GND
TXD-B
RTS-B
DTR-B
RXD-B
CTS-B
DSR-B
DCD-B
RI-B
J3
RXD
CTS
DSR
N/C
TXD
RTS
DTR
DCD
RI
GND
DF11-10DP-2DS(24)
0
R14
0
R15
MT1
MT-HOLE
MT2
MT-HOLE
CHASSIS
CHASSIS

DCN:6092
PRINTED DOCUMENTS ARE UNCONTROLLED

Title		
Auxiliary I/O Board (USB)		
Size A	Number 06731	Revision B
Date: 5/6/2011		Sheet 2 of 3
File: N:\PCBMGR\..\06731-2_USB.SchDoc		Drawn By: RT

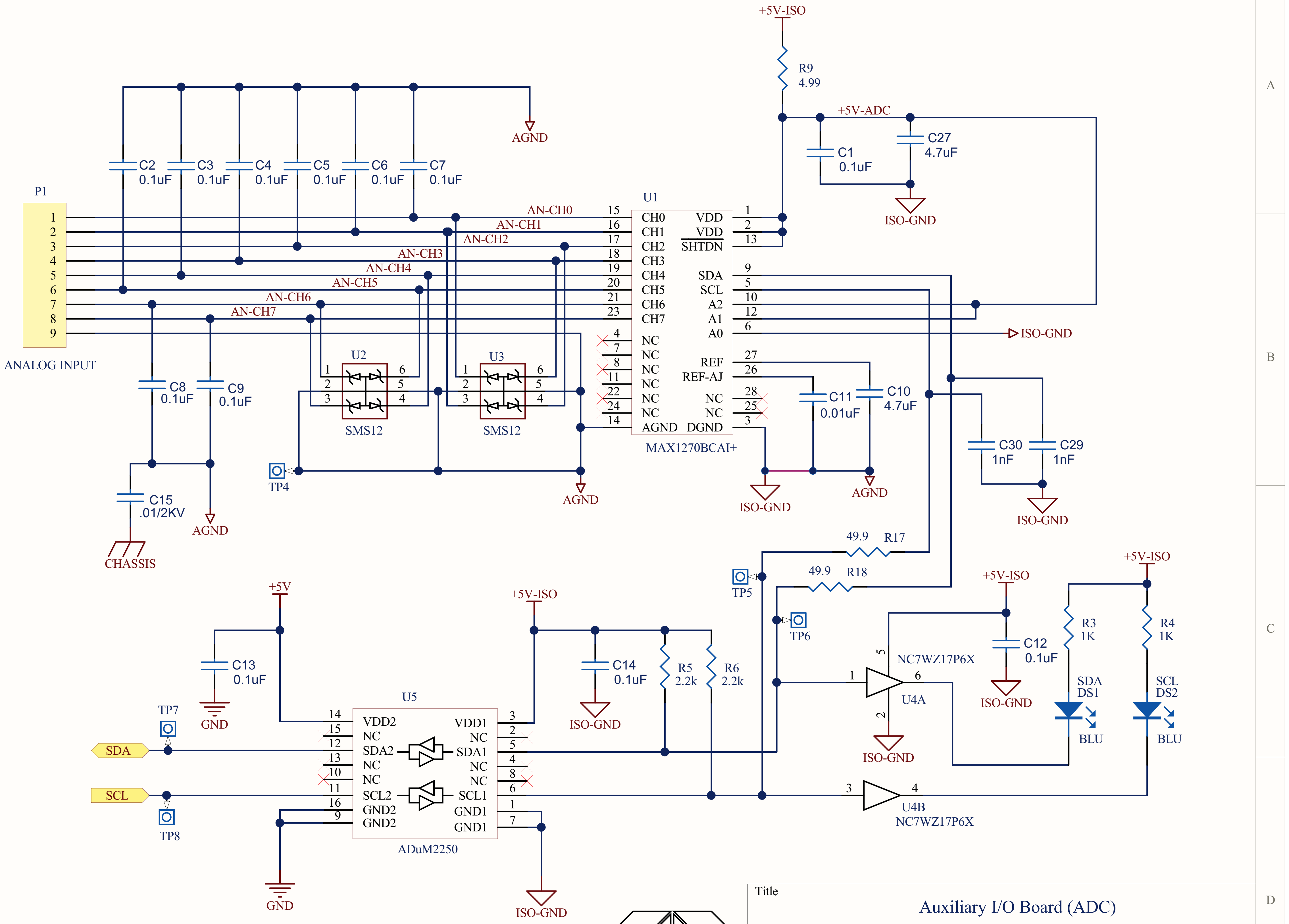
+5V-ISO
R9
4.99
+5V-ADC
C1
0.1uF
C27
4.7uF
ISO-GND
AGND
C2
0.1uF
C3
0.1uF
C4
0.1uF
C5
0.1uF
C6
0.1uF
C7
0.1uF
P1
1
2
3
4
5
6
7
8
9
ANALOG INPUT
AN-CH0
AN-CH1
AN-CH2
AN-CH3
AN-CH4
AN-CH5
AN-CH6
AN-CH7
U1
CH0
CH1
CH2
CH3
CH4
CH5
CH6
CH7
NC
NC
NC
NC
NC
NC
AGND
VDD
VDD
SHTDN
SDA
SCL
A2
A1
A0
REF
REF-AJ
NC
NC
DGND
MAX1270BCAI+
ISO-GND
U2
SMS12
U3
SMS12
C8
0.1uF
C9
0.1uF
C15
.01/2KV
CHASSIS
AGND
TP4
AGND
C11
0.01uF
C10
4.7uF
ISO-GND
AGND
C30
1nF
C29
1nF
ISO-GND
49.9
R17
49.9
R18
TP5
TP6
+5V-ISO
C12
0.1uF
ISO-GND
+5V-ISO
R3
1K
R4
1K
SDA
DS1
SCL
DS2
BLU
BLU
NC7WZ17P6X
U4A
ISO-GND
U4B
NC7WZ17P6X
+5V
C13
0.1uF
GND
TP7
SDA
SCL
TP8
+5V-ISO
C14
0.1uF
ISO-GND
R5
2.2k
R6
2.2k
U5
VDD2
NC
SDA2
NC
NC
SCL2
GND2
GND2
VDD1
NC
SDA1
NC
NC
SCL1
GND1
GND1
ADuM2250
GND
ISO-GND

Title		
Auxiliary I/O Board (ADC)		
Size A	Number 06731	Revision B
Date: 5/6/2011		Sheet 3 of 3
File: N:\PCBMGR\..\06731-3_ADC.SchDoc		Drawn By: RT

DCN:6092

PRINTED DOCUMENTS ARE UNCONTROLLED