TELEDYNE
ADVANCED POLLUTION INSTRUMENTATION
A Teledyne Technologies Company

M200EU-NOy CONVERTER

ADDENDUM

(for use with M200E Operators Manual, PN 04410
and with the M200EU Addendum, PN 05385)

© TELEDYNE ADVANCED POLLUTION INSTRUMENTATION
9480 CARROLL PARK DRIVE
SAN DIEGO, CA 92121-5201
USA

Toll-free Phone: 800-324-5190
Phone: 858-657-9800
Fax: 858-657-9816
Email: api-sales@teledyne.com
Website: http://www.teledyne-api.com/

Part Number 05386D
DCN5822
23 August 2010

Copyright 2009-2010
Teledyne Advanced Pollution Instrumentation

Safety Messages

Important safety messages are provided throughout this manual for the purpose of avoiding personal injury or instrument damage. Please read these messages carefully. Each safety message is associated with a safety alert symbol, and are placed throughout this manual and inside the instrument. The symbols with messages are defined as follows:

WARNING: Electrical Shock Hazard

HAZARD: Strong oxidizer

GENERAL WARNING/CAUTION: Read the accompanying message for specific information.

CAUTION: Hot Surface Warning

Do Not Touch: Touching some parts of the instrument without protection or proper tools could result in damage to the part(s) and/or the instrument.

Technician Symbol: All operations marked with this symbol are to be performed by qualified maintenance personnel only.

Electrical Ground: This symbol inside the instrument marks the central safety grounding point for the instrument.

CAUTION

This instrument should only be used for the purpose and in the manner described in this manual. If you use this instrument in a manner other than that for which it was intended, unpredictable behavior could ensue with possible hazardous consequences.

NEVER use any gas analyzer to sample combustible gas(es)!

Note

For Technical Assistance regarding the use and maintenance of this instrument or any other Teledyne API product, contact Teledyne API's Customer Service Department:

Telephone: 800-324-5190

Email: api-customerservice@teledyne.com

or access any of the service options on our website at http://www.teledyne-api.com/

Table of Contents

Safety Messages i

Table of Contents iii

List of Figures iv

List of Tables iv

1.0 INTRODUCTION 5

2.0 GETTING STARTED 7

2.1 Unpacking 7

2.2 Electrical and Pneumatic Connections 7

2.3 Initial Operation 9

3.0 SPECIFICATIONS, WARRANTY 11

3.1 Specifications 11

3.2 Warranty 12

4.0 THE M200EU-NO_Y CONVERTER 13

4.1 Principle of Operation 13

5.0 CALIBRATION AND ZERO/SPAN CHECKS 15

5.1 Calibration or Cal Check Procedure 16

6.0 MAINTENANCE 19

6.1 Maintenance Schedule 19

6.2 Replacing the Sample Particulate Filters 20

6.3 Checking Analyzer Flow Rate 22

6.4 Replacing the Converter 22

6.5 Inspecting Pneumatic Lines 24

6.6 Checking for Leaks 27

7.0 TROUBLESHOOTING, ADJUSTMENTS 29

7.1 Operation Verification – Diagnostic Techniques 30

7.1.1 Pneumatic System 30

7.1.2 Leak Check 32

7.1.3 Bypass Pump Diagnostic Procedures 32

7.1.4 Electrical Fault Isolation 32

7.2 Setting the Converter Temperature 32

7.2.1 Temperature Controller Setup 32

8.0 M200EU-NO_Y SPARE PARTS LIST 37

List of Figures

FIGURE 1 REAR PANEL PNEUMATIC CONNECTIONS 8
FIGURE 2 REPLACING THE PARTICULATE FILTER 21
FIGURE 3 NOY CONVERTER ASSEMBLY 23
FIGURE 4 PNEUMATICS DIAGRAM (STANDARD AND Z/S OPTION) 25
FIGURE 5 PNEUMATIC DIAGRAM (OPT 86 OPTION – SAMPLE DRIERS) 26
FIGURE 6 ELECTRICAL DIAGRAM 35

List of Tables

TABLE 1 FINAL TEST AND CALIBRATION VALUES 9
TABLE 2. SPECIFICATIONS FOR THE CONVERTER AND THE BYPASS PUMP 11
TABLE 3 MANUAL ZERO CALIBRATION PROCEDURE - ZERO GAS THROUGH SAMPLE PORT 16
TABLE 4 ENTER EXPECTED SPAN GAS CONCENTRATIONS PROCEDURE FOR NO & NOY 17
TABLE 5 SPAN CALIBRATION PROCEDURE 17
TABLE 6 PREVENTATIVE MAINTENANCE CALENDAR 19
TABLE 7 TEMPERATURE CONTROLLER PROGRAMMING GUIDE 33

1.0 INTRODUCTION

The M200EU-NOy converter is designed to support a NOx analyzer by converting multiple, unstable compounds grouped under the name **NOy**. The converter is mounted on the analyzer at the sample inlet to minimize flow time between sample in and converter, thereby optimizing measurement accuracy.

This manual addendum is to be used in conjunction with the M200E operation manual and the M200EU addendum.

This page intentionally left blank.

2.0 GETTING STARTED

The NOy converter has been designed to operate with the M200EU low level NOx analyzer.

2.1 Unpacking

CAUTION!

Avoid personal injury: use two persons each to lift and carry the the M200EU analyzer and the Model 501 Pump Pack chassis.

The M200EU with NOy Option comes in three boxes:

- M200EU analyzer
- Bypass Pump Chassis
- External Converter housed in a stainless enclosure, and umbilical cable assembly

1. Verify that there is no apparent shipping damage. If damage has occurred please advise shipper first, then API. (Keep original container and packaging for shipper's inspection).
2. Before operation of the M200EU, remove the shipping screws as shown in the M200E/EU Manual.
3. Please check the voltage and frequency label on the rear panel of the instrument for compatibility with the local power before plugging in the M501Y.

2.2 Electrical and Pneumatic Connections

1. Mount the converter on a suitable mast outside of the enclosure.
2. Route the umbilical cable assembly into the shelter.
3. Locate the M200EU and Bypass Pump Chassis in close proximity, preferably mounting one over the other in a 19" rack.
4. Connect the electrical/pneumatic cable fittings to the rear of the Bypass Pump Chassis. Use the tags on each tube and **Figure 1** to match up the correct tube with the rear panel bulkhead fitting. Please note that the dashed lines show optional Zero/Span Valve configuration connections.
5. Connect the 7-pin power and signal cable to the connector on the rear of the Bypass Pump Chassis.
6. Connect the power cord to the correct line voltage.

WARNING!

- Lethal voltages are present inside the chassis.
- Do not operate with cover off during normal operation
- Before operation, check for correct input voltage and frequency.
- Do not operate without proper chassis grounding
- Do not defeat the ground wire on power plug
- Turn off power before disconnecting electrical subassemblies

Figure 1 Rear Panel Pneumatic Connections

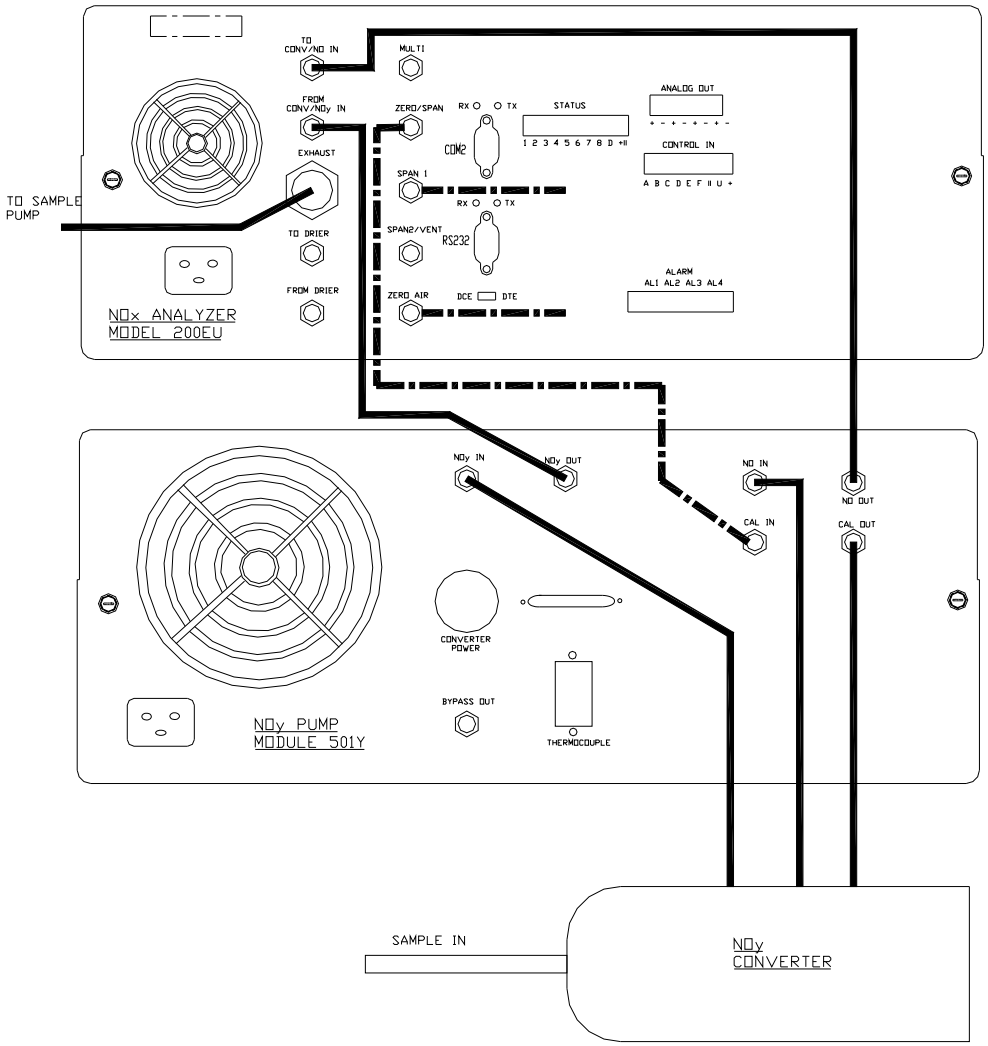

2.3 Initial Operation

1. After confirming proper supply voltage, turn on the instrument power. If you are unfamiliar with the M200EU with NOy Option, we recommend that you read the overview in Section 3 before proceeding.
   - The power indicator light and display should immediately light, in addition the bypass pump should start up. The Bypass Pump Chassis requires about 30 minutes for the converter to come up to temperature.
   - While the converter is coming up to temperature, the M200EU analyzer should be powered-up. Also, follow the instructions in the M200E Manual and the M200EU Addendum to confirm proper operation of that instrument. **Note**: It will take 30 minutes for the ozone generator to start up in the M200EU. During that time the instrument will not respond to span gas.
   - After 30 min, the display on the Bypass Pump Chassis should read 315°C, indicating that the converter is up to temperature.
2. Proceed to Section 4 of this manual to do a Zero/Span check.

Table 1 Final Test and Calibration Values

Test Values	Observed Value	Units	Nominal Range
CONVERTER TEMP		^{o}C	315 ±7
BYPASS FLOW – NO CHANNEL		CC/MIN	800 ± 80
BYPASS FLOW – NOy CHANNEL		CC/MIN	800 ± 80

Converter Serial # _____

Date _____ Technician _____

This page intentionally left blank.

3.0 SPECIFICATIONS, WARRANTY

3.1 Specifications

Table 2. Specifications for the converter and the Bypass Pump

Converter	Remotely mounted molybdenum converter with temperature controller in a NEMA – 4 enclosure.
Converter Temperature	315°C ± 7°C with read-out on front panel of bypass pump chassis.
Tube/Electrical Cable Assembly	Up to 50 feet (15 m) maximum length
Power, Bypass Pump Assembly	120V~ 60 Hz, 230V~ 50 Hz 360 watts
Power, Converter Assembly	120V~ 50/60 Hz, 60 watts
Converter Efficiency	>96% for NO2
Weight, Bypass Pump Assembly	35 lbs (16 kg)
Weight, Remote Converter	30 lbs (11 kg)
Bypass Pump Chassis Dimensions HxWxD	9" x17" x23.6" (23cm x 43cm x 61cm)
Remote Converter Assy Dimensions HxWxD	12"x19"x7" (31cm x 48cm x 18cm)
Environmental	Installation Category (Over-voltage Category) II Pollution Degree 2
Bypass Flowrate Cal gas Flowrate	800 cc/min ± 10%, each channel 4000 cc/min (approx.)
Analog output	Converter temp analog output. 3.15 VDC = 315°C

3.2 Warranty

TELEDYNE ADVANCED POLLUTION INSTRUMENTATION, INC.

02024c

Prior to shipment, API equipment is thoroughly inspected and tested. Should equipment failure occur, API assures its customers that prompt service and support will be available.

COVERAGE

After the warranty period and throughout the equipment lifetime, API stands ready to provide on-site or in-plant service at reasonable rates similar to those of other manufacturers in the industry. All maintenance and the first level of field troubleshooting are to be performed by the customer.

NON-API MANUFACTURED EQUIPMENT

Equipment provided but not manufactured by API is warranted and will be repaired to the extent and according to the current terms and conditions of the respective equipment manufacturers warranty.

GENERAL

API warrants each Product manufactured by API to be free from defects in material and workmanship under normal use and service for a period of one year from the date of delivery. All replacement parts and repairs are warranted for 90 days after the purchase.

If a Product fails to conform to its specifications within the warranty period, API shall correct such defect by, in API's discretion, repairing or replacing such defective Product or refunding the purchase price of such Product.

The warranties set forth in this section shall be of no force or effect with respect to any Product:
(i) that has been altered or subjected to misuse, negligence or accident, or (ii) that has been used in any manner other than in accordance with the instruction provided by API or (iii) not properly maintained.

THE WARRANTIES SET FORTH IN THIS SECTION AND THE REMEDIES THEREFORE ARE EXCLUSIVE AND IN LIEU OF ANY IMPLIED WARRANTIES OF MERCHANTABILITY, FITNESS FOR PARTICULAR PURPOSE OR OTHER WARRANTY OF QUALITY, WHETHER EXPRESSED OR IMPLIED. THE REMEDIES SET FORTH IN THIS SECTION ARE THE EXCLUSIVE REMEDIES FOR BREACH OF ANY WARRANTY CONTAINED HEREIN. API SHALL NOT BE LIABLE FOR ANY INCIDENTAL OR CONSEQUENTIAL DAMAGES ARISING OUT OF OR RELATED TO THIS AGREEMENT OF API'S PERFORMANCE HEREUNDER, WHETHER FOR BREACH OF WARRANTY OR OTHERWISE.

TERMS AND CONDITIONS

All units or components returned to Teledyne API should be properly packed for handling and returned freight prepaid to the nearest designated Service Center. After the repair, the equipment will be returned, freight prepaid.

4.0 THE M200EU-NO_Y CONVERTER

4.1 Principle of Operation

The T-API Model M200EU with NOy Option is designed to measure the concentration of NO, NO2, and other compounds that are too unstable to be measured when taken in through the normal ambient air sample inlet system. Please refer to the M200EU manual supplied with this system for a general discussion of the operation of a NOx analyzer. The suite of compounds known collectively as NOy is composed of roughly 30 compounds. There is some disagreement over whether certain compounds should be on the list. The NOy measurement is generally done in conjunction with a standard NOx measurement, with the difference between the two being the concentration of the unstable compounds, sometimes referred to as NOz. The analyzer measures two independent gas streams. One bypasses the external converter and measures NO in the sample. The other pulls the sample through the external converter and is displayed as NOy. Under normal calibration conditions the NOy measurement is equivalent to the delivered NOx calibration gases.

The system is composed of 3 modules:

- The M200EU analyzer, without a Moly converter.
  - This is the location of the optional Zero/Span Valves.
- A Bypass Pump Module containing:
  - bypass pump
  - flow control
  - sample filtration
  - moly temperature control
  - pneumatic provisions for calibration
  - optional sample Dryers to remove moisture
- Externally mounted molybdenum converter

The M200EU w/NOy Option system allows the converter to be mounted at the sample inlet point. This configuration provides minimal time delay between the sample inlet port and the remotely mounted molybdenum converter. Minimizing the transit time between the sample inlet and converter enables the conversion of labile components of NOy. The equation for the conversion is:

$$3\ NO_Y + Mo \xrightarrow{315^oC} 3\ NO + MoO_3$$

This page intentionally left blank.

5.0 CALIBRATION AND ZERO/SPAN CHECKS

Unlike most NOx analyzers, the M200EU with the NOy option does not have a sample inlet port on the rear panel of the M200EU. The sample port is located on the External Converter; therefore Zero/Span calibration is different than a normal NOx instrument. If a fitting is located at the sample port the analyzer is equipped with the Zero/Span option.

Follow the steps in the M200E/EU manual to:

a. Enter the expected NO and NOy span gas concentrations in the M200EU.
b. Do the zero calibration procedure
c. Do the span calibration procedure

The analyzer always routes the zero/span gas through the external converter. In standard configuration, the calibration gas needs to be input at the "Cal in" port of the M501 Pump pack. When Zero/Span valve option is installed, zero and span gases are to be provided at the M200EU Zero and Span ports. In all cases, the calibration gas delivered must be under a small amount of pressure (2-5 psig) to overcome the resistance of the hoses. Also, there must be no venting of the Zero or Span gas to atmosphere prior to the analyzer. The gases actually vent at the external converter.

Calibration gas must be provided for both the bypass system and the M200EU analyzer. Flow requirements are 0.80 LPM for NO bypass, 0.80 LPM for NOy bypass and 1 LPM for the M200EU. Calibration gas flow must be in sufficient excess (~4 LPM) to prevent any ambient air from entering the **SAMPLE** port on the pole.

The maximum 50 ft length of tubing between the bypass Pump Module and the remote Moly converter has been proven to generate too much backpressure for some brands of calibrators. Experience to date is that while NO calibration is correct, GPT can be incorrect due to errors in dilution of the ozone.

We strongly recommend that SPAN CALIBRATION be done with NO span gas. SPAN CHECKS can be done with either NO only, NO2 only or a mixture of NO and NO2 (GPT).

Zero air used for all calibration procedures, including GPT, should have <1 ppt NO and NO2, less than 1 ppt of major interferents such as SO2, NH3, hydrocarbons and a dew point of -5°C or less. The calibration gasses should be from a reliable supplier, since the quality of the tank concentration values ultimately determines the accuracy of the analyzer.

NOTE
The M200EU with the NOy Option does NOT have equivalency approval, and may not be used for EPA monitoring.

5.1 Calibration or Cal Check Procedure

The calibration of the instrument can be checked or adjusted using gas introduced through the calibration port "CAL IN" on the Bypass Pump Module. The calibration gas is routed to a TEE near the sample inlet port on the remote converter assembly.

Since the zero gas concentration is defined as 0 ppb, it is not necessary to enter the expected zero value. **Table 3** details the zero calibration procedure.

Table 3 Manual Zero Calibration Procedure - Zero Gas Through Sample Port

Step Number	Action	Comment
1.	Press CAL	The M200EU enters the calibrate mode.
2.	Wait For Stability Typ STB < 0.1 PPB	Wait for reading to stabilize at zero value.
3.	Press ZERO	If you change your mind after pressing ZERO, you can still press EXIT here without zeroing the instrument.
4.	Press ENTR	Pressing ENTR actually changes the calculation equations.
5.	Press EXIT	M200EU returns to sampling. Immediately after calibration, data is not added to the DAS averages.

Table 4 Enter Expected Span Gas Concentrations Procedure For NO & NOy

Step	Action	Comment
1.	Press CAL-CONC-NOy	This key sequence causes the M200EU to prompt for the expected NOy concentration. Enter the NOy span concentration value by pressing the key under each digit until the expected value is set.
2.	Press ENTR	ENTR stores the expected NOy span value.
3.	Press CAL-CONC-NO	Now enter the expected NO span concentration as in step one.
4.	Press ENTR	Pressing ENTR stores the NO span value and returns the prompt to the CONC menu.
5.	Press EXIT	Returns instrument to SAMPLE mode.

If desired, compensation for converter efficiency (CE) can be included in the NOy concentration calculation. Prior to calibration, the converter efficiency should either be set to 1.0 or determined per the procedure in the M200E manual.

Table 5 Span Calibration Procedure

Step	Action	Comment
1.	Press CAL	The M200EU enters the calibrate mode.
2.	Wait For Stability Type STB < 2 PPB	Wait for reading to stabilize at span value.
3.	Press SPAN	If you change your mind after pressing SPAN, you can still press EXIT here without spanning the instrument.
4.	Press ENTR	Pressing ENTR actually changes the calculation equations and causes the instrument to read the NO and NOy span concentrations.
5.	Press EXIT	M200EU returns to sampling. Immediately after calibration, data is not added to the DAS averages.

This page intentionally left blank.

6.0 MAINTENANCE

6.1 Maintenance Schedule

The schedule for preventative maintenance is presented in **Table 6** below.

Table 6 Preventative Maintenance Calendar

Item	Maintenance Interval
Zero/Span Calibration	Annually or after maintenance or repairs
Zero/Span Checks	Daily
Particulate Filter	Weekly as needed
Ozone Flow	Check every year and replace o-ring and orifice in reaction cell
Ozone Dryer Filter-DFU	Replace every year
Sample Flow	Check every 2 months
Converter	Check efficiency every 2 months
Pneumatic Lines	Check every 3 months
Factory Calibration	Calibrate each year or after repairs
Leak Check	Check every 6 months
Replace bypass flow orifices	Every year / as needed
Rebuild bypass pump	Every year

6.2 Replacing the Sample Particulate Filters

The particulate filter should be inspected often for signs of plugging or contamination. It is also common for dirt particles to cause instrument drift, and affect accuracy.

To check and change the filter:

1. Fold down the Bypass Pump Module front panel.
2. Locate both filters on the left and right side of the Pump Module front panel. See **Figure 2** for an exploded view of the filter assembly.
3. Visually inspect the filter through the glass window.
4. If the filter appears dirty, unscrew the hold-down ring, remove the Teflon o-ring and then the filter.
5. Replace the filter, being careful that the element is fully seated in the bottom of the holder. Replace the Teflon o-ring, then screw on the hold-down ring and hand tighten.

NOTE:
Handle the wetted surfaces as little as possible and clean with cloth prior to assembly

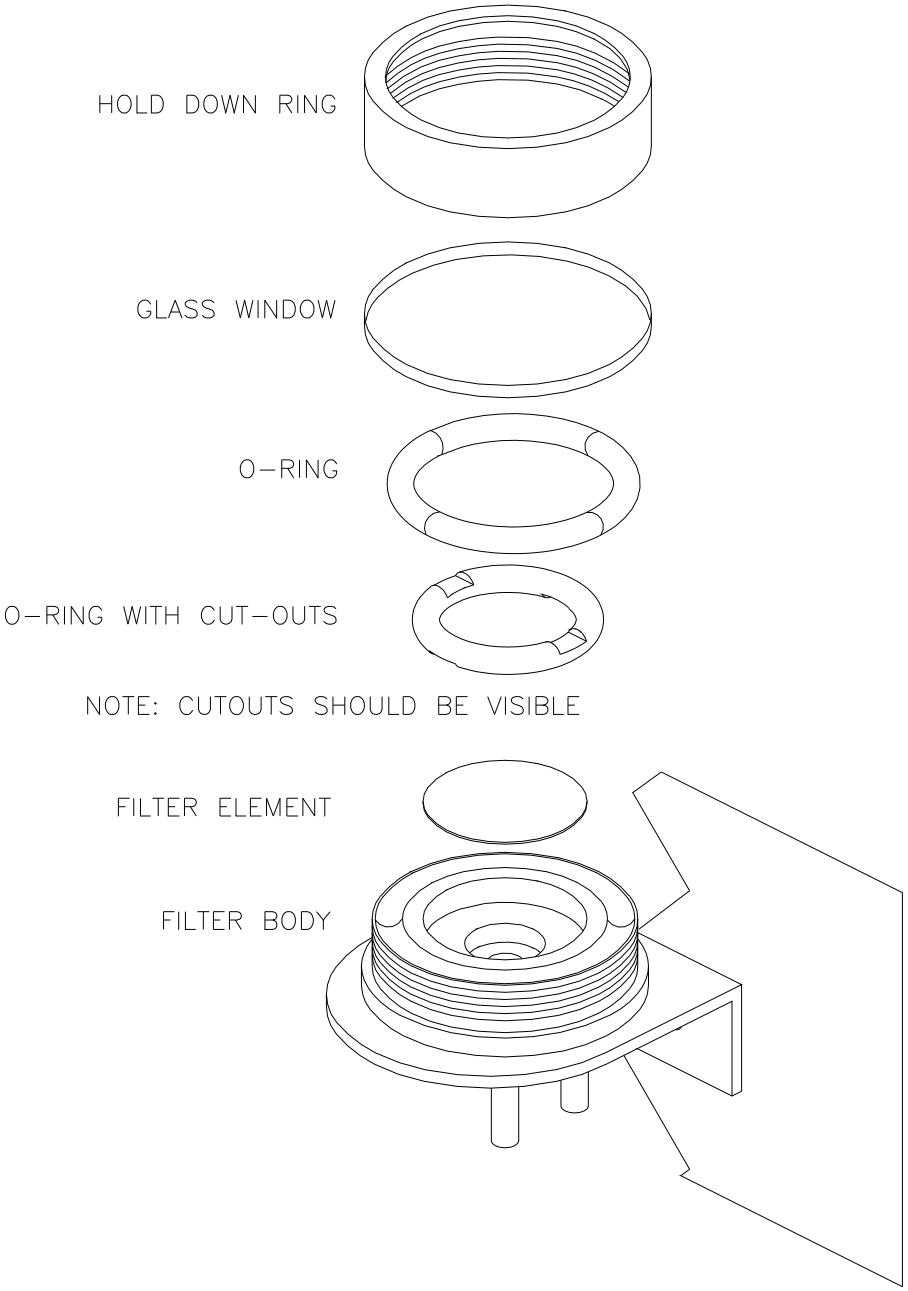

Figure 2 Replacing the Particulate Filter

6.3 Checking Analyzer Flow Rate

The external sample pump is capable of maintaining the reaction cell pressure at less than 5.0 In-Hg-A. If a higher pressure is noted, the pump may need servicing. Check the pump and pneumatic system for leaks or rebuild pump.

CAUTION!

Never operate the analyzer without the ozone destruct component properly seated and connected within the pneumatic path. The ozone destruct is integrated into the converter case, at the exhaust of the reaction cell, inside the instrument.

The sample flow as measured at ports "TO CONV/NO IN" and "FROM CONV/NOy IN" at the rear of the analyzer should be 1000 ± 100 cc/min.

See **Figure 1** for component locations.

6.4 Replacing the Converter

The heater, thermocouple, and converter assembly is designed to be replaced as a single unit. Check **Figure 3** for component location.

CAUTION!

The converter operates at 315□C. Severe burns can result if not enough time is allowed for the assembly to cool. Do not handle assembly until it is at room temperature.

1. Turn off the power to the bypass pump at the chassis front panel
2. Allow the converter to cool.
3. Disconnect the gas fittings and power cable from the can.
4. Remove the entire assembly from the chassis.
   a. Remove the pneumatic fittings.
   b. Remove the converter assembly from the chassis by loosening the 4 captive screws that secures the assembly to the chassis.
5. Remove bottom bracket and re-attach it to the replacement converter assembly.
6. Install the assembly back into the analyzer.
7. Re-attach the electrical and pneumatic fittings. Leak check the assembly when completed.
8. Turn the power back on. The insulation can emit a burnt odor for the first 24 hours; this is normal. Allow the converter to burn-in for 24 hours, then re-calibrate the instrument.

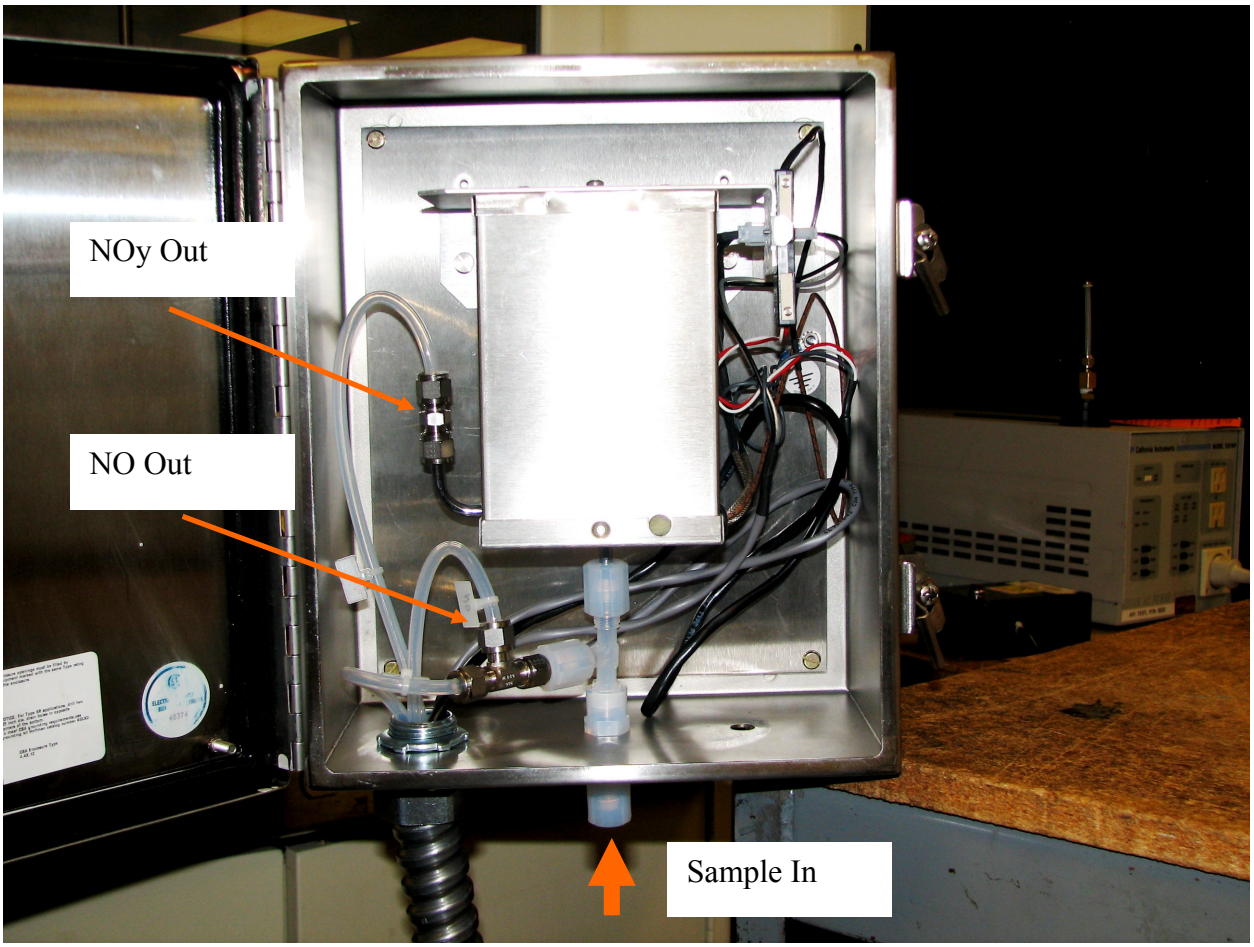

Figure 3 NOy Converter Assembly

6.5 Inspecting Pneumatic Lines

Particulate matter in the pneumatic lines will affect both flow rate and response time. It is important that the pneumatic system be periodically inspected and thoroughly cleaned if necessary. Clean by disassembling and passing methanol through three times. Dry with clean zero air.

Also inspect all pneumatic lines for cracks and abrasion on a regular basis. Replace as necessary.

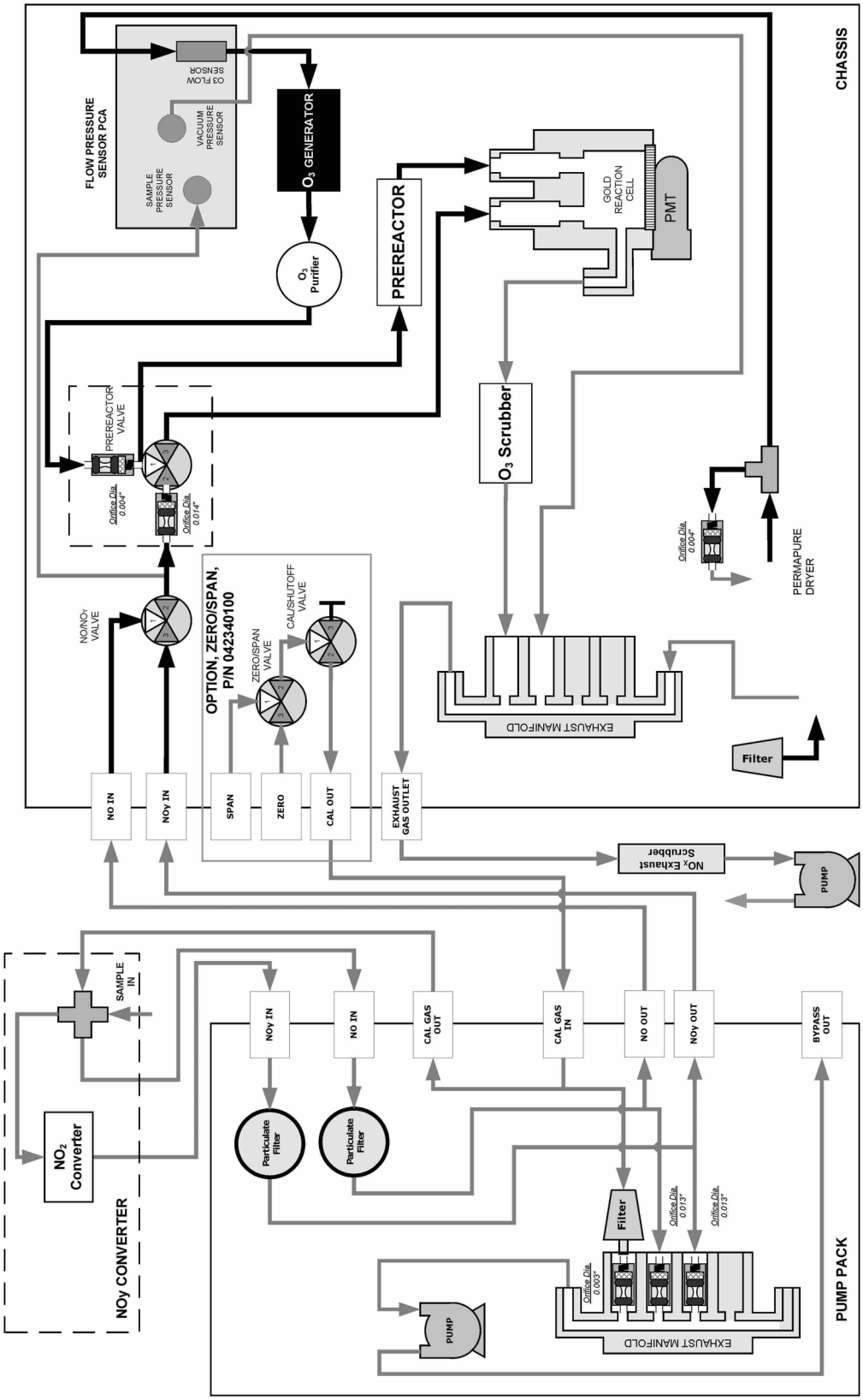

Figure 4 Pneumatics diagram (standard and Z/S option)

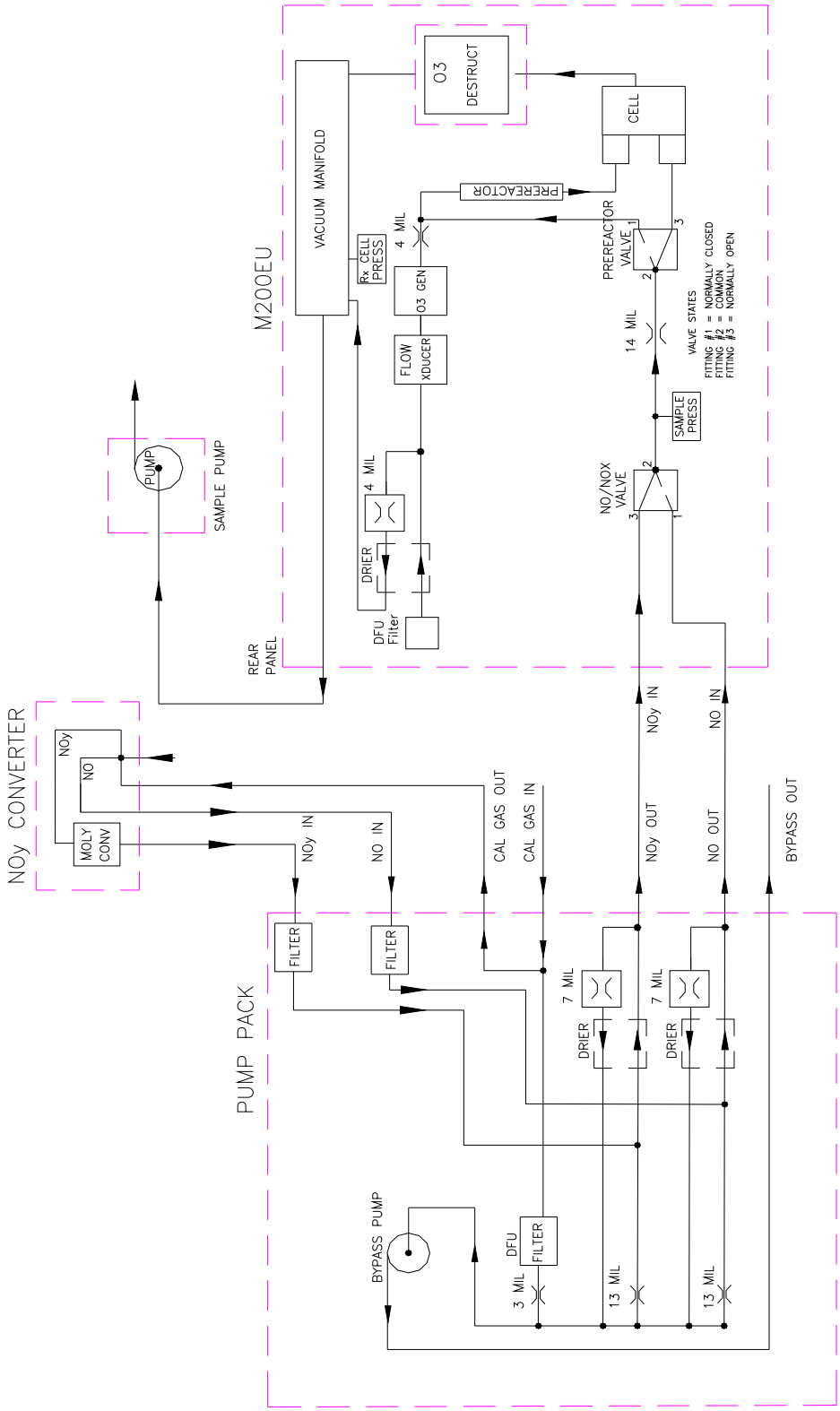

Figure 5 Pneumatic diagram (OPT 86 option – Sample Driers)

6.6 Checking for Leaks

If a leak checker is not available, it is possible to leak check the instrument using the sample pump plus a shut-off valve.

1. Turn off instrument power and pump power.
2. Cap the sample inlet port, bypass out port, ozone generator air inlet, and zero/span inlets (if Z/S valve option present).
3. Insert a shut-off valve between the sample pump and the exhaust port at the rear of the instrument.
4. Turn on instrument and sample pump power. Set the TEST function to RCEL, which measures the reaction cell pressure. Close the shutoff valve and monitor the cell pressure. The pressure should not drop more than 1"Hg (.5psi) in 5 minutes. If there is a leak, it is not possible to tell where it is located using this method. You can locate the leak by using a pressure leak checker described below.

If you have a leak checker:

1. Turn off instrument power and pump power.
2. Disconnect the sample pump at the rear panel. Cap the sample inlet port, bypass out port, ozone generator air inlet, and zero air inlet (if Z/S valve option present) and connect the leak checker to the instrument exhaust port.

	CAUTION! Pressure must be less than 15 PSI.

3. Pressurize system and check for leaks by watching overall pressure. The pressure should not drop more than 1"Hg (.5psi) in 5 minutes.

If the instrument fails the pressure test, each fitting needs to be leak checked to find the location. Be careful that the system is always pressurized so as not to draw soap solution into the plumbing system. Make sure you dry off any accumulated bubble solution. Start by checking the external fittings first.

This page intentionally left blank.

7.0 TROUBLESHOOTING, ADJUSTMENTS

	CAUTION! The operations outlined in this section must be performed by qualified maintenance personnel only!

This section of the manual contains information on diagnosing and repairing instrument performance problems. It provides troubleshooting procedures that address problems to the board level.

As a guide to troubleshooting, think of the M200EU-NOy as two systems:
Pneumatics and Electronics.

- Pneumatics - Over 50% of all instrument problems are traced to leaks in the M200EU, Bypass Pump Module assembly, pole mounted converter assembly, sample filter, or zero/span gas delivery system (calibrator). Suspect a leak first.
- Electronics – converter temp control board or DC power supply for the converter temperature readout.

Another trouble-shooting tip has to do with incorrect span gas concentration:

- This could come either from the calibrator or entering the expected span gas concentration in the instrument incorrectly.
- If the instrument does not respond to span gas, check troubleshooting section in the M200E manual.

The above should get you started in diagnosing and repairing the most common faults. If these reasons have been eliminated and there are still problems with the unit, the next thing to do is a Factory Calibration covered in the M200E manual. If difficulties persist, contact our service department. The 800 telephone number is on the cover page of this manual.

7.1 Operation Verification – Diagnostic Techniques

7.1.1 Pneumatic System

The pneumatic system is diagramed in

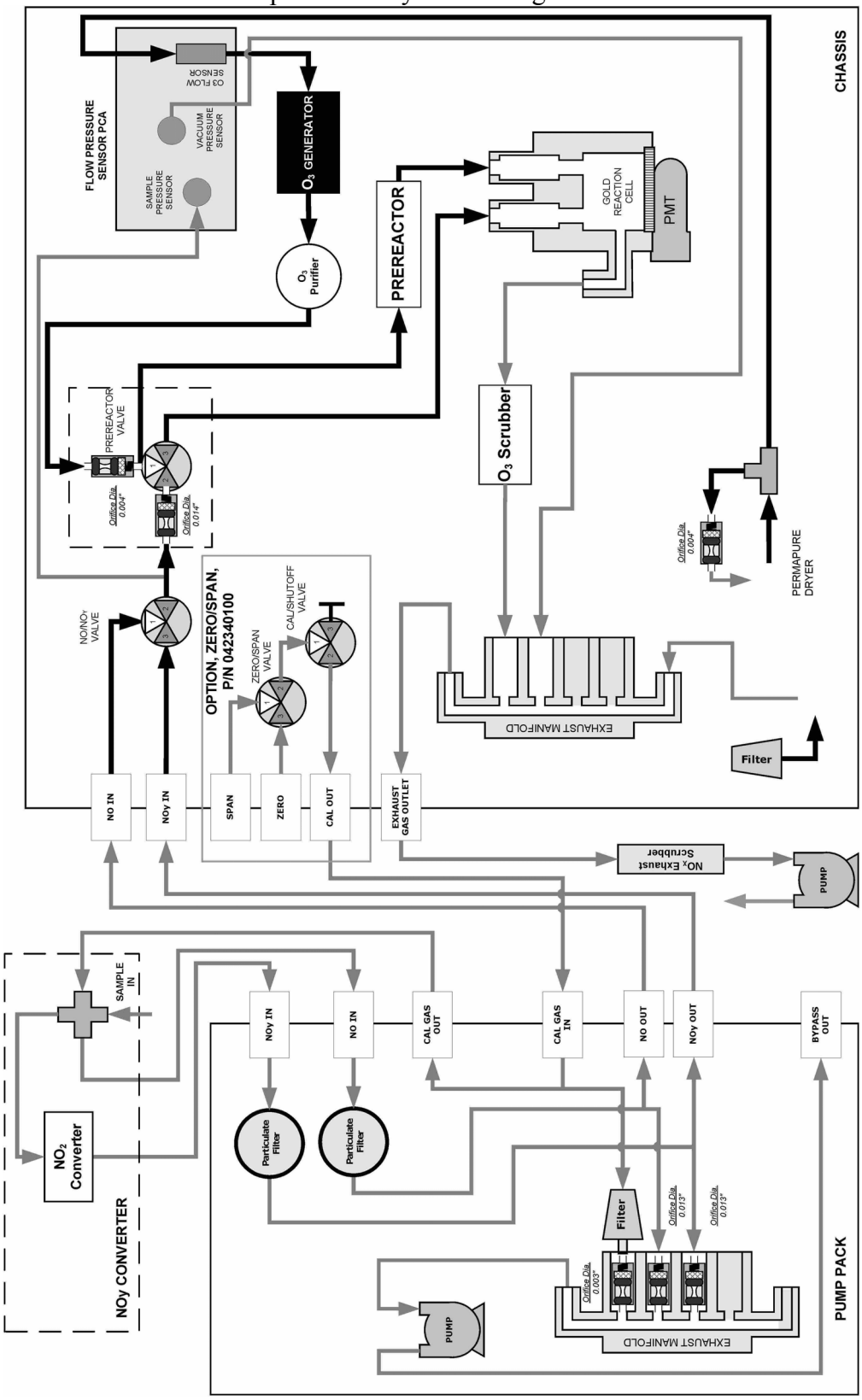

Figure 4.

7.1.2 Leak Check

Refer to Section 5.6 for the leak check procedure.

7.1.3 Bypass Pump Diagnostic Procedures

The bypass pump is capable of maintaining a total bypass flowrate of ~2.2 lpm. If flow checks indicate a fall off in bypass flow, the pump may need servicing. Check the pump, inlet fittings, and analyzer for leaks first. If other causes have been eliminated, rebuild the pump.

7.1.4 Electrical Fault Isolation

115 VAC is supplied to:

- the bypass pump
- the +5 volt and +24 volt switcher supplies
- the input power to the converter temperature controller

Use Figure 6 to check the 115 VAC supply voltage to each of these components.
The converter temperature is controlled by the FUJI controller located on the Pump Module front panel. The controller cycles power to the external converter, thereby maintaining the temperature at 315 ^{O}C, using the solid state relay.

7.2 Setting the Converter Temperature

A front panel-mounted programmable controller maintains the temperature of the remote molybdenum converter. By pressing the PV/SV button in the lower left corner of the controller, you can see the Present Value (actual temperature) or the Set Value (temperature set point). The temperature and PID control parameters have been set at the factory and no further adjustment should be necessary. Should you need to adjust the temperature, follow these steps:

1. Select **SV** with the PV/SV button,
2. Press the "up-arrow" under the digit you want to change,
3. (the digit will flash),
4. Press the "up-arrow" under the digit or the "down-arrow" at the left to scroll the digit to the desired value,
5. Repeat for the other two digits,
6. Press the ENTER button.
7. Select **PV** with the PV/SV button to observe the actual temperature.

7.2.1 Temperature Controller Setup

The FUJI temperature controller has been programmed at the factory and should not need to be altered under normal usage.

Indications that would require re-programming are:

- Failure / replacement of controller.
- Replacement of thermocouple element.
- Controller's loss of PID parameters leading to instability of the temp setpoint.

In the event that the control parameters are changed or in the event that a new controller is installed, it must be reprogrammed to suit the thermal characteristics of the instrument. The controller includes an Autotuning feature, which can be used to properly set the PID factors.
To start the Autotune procedure:

1. Press Sel until A7 (AT) is displayed
2. Press Data until value = 1 (enable Autotune)
   - While Autotuning, the decimal point LED will blink.
   - NOTE: During the procedure, it is normal for the temp to overshoot up to 100°C.
   - When the decimal point LED turns off, Autotune is complete. No further adjustment should be necessary.

Table 7 Temperature Controller Programming Guide

PRESS	DISPLAY	ACTION
SEL DATA	**P** PROP BAND	UP/DOWN SET TO 5.0 (ENTER)
SEL DATA	**i** INTEGRAL	SET TO 50
SEL DATA	**d** DERIVATIVE TIME	SET TO 15
SEL DATA	**AL** LOW ALARM SETP	SET TO 300
SEL DATA	**AH** HIGH ALARM SETP	SET TO 330
SEL DATA	**7C** CYCLE TIME	SET TO 2 (FOR FAST SYSTEM)
SEL	**HYS** HYSTERESIS	SET TO 0.3
SEL	**LOC** LOCK	0 = OPEN 1 = LOCKED 2 = SV ONLY OPEN

NOTE:
DO NOT SET THE TEMPERATURE (SV) HIGHER THAN 320°C.

SECONDARY MENU (The fixed characteristics of the system).

PRESS	DISPLAY	ACTION
SEL *hold until*	**p-n1**	SET TO 0 – REVERSE ACTION
SEL *hold until*	**p-n2**	SET TO 2 = TYPE J THERMOCOUPLE
SEL	**p-dF** DIGITAL FILTER	SET TO 5
SEL	**P-SL** LOWER LIMIT	SET TO -40 (-40ºC)
SEL	**P-SU** UPPER LIMIT	SET TO 350 (350ºC)
SEL	**P-AH** ALARM	SET TO 0
SEL	**P-An** HYTERESIS	SET TO 5
SEL	**P-dP** PROG DECIMAL	SET TO 0
SEL	**PVOF** PROCESS OFFSET	LEAVE AT 0
SEL	**SVOF** SET POINT OFFS	LEAVE AT 0
SEL	**P-F**	SET TO 0 (0 = ^{o}C, 1 = ^{o}F)
SEL	**P-n1**	ALREADY CONFIGURED
SEL *hold until*	RETURNS TO MAIN MENU	
SEL	**PV/SV**	SET DISPLAY TO 315 °C
SEL *hold until*	**P** PROP BAND	ALREADY CONFIGURED
SEL	SCROLL TO **A7**	SET TO 1 (AUTOTUNE)

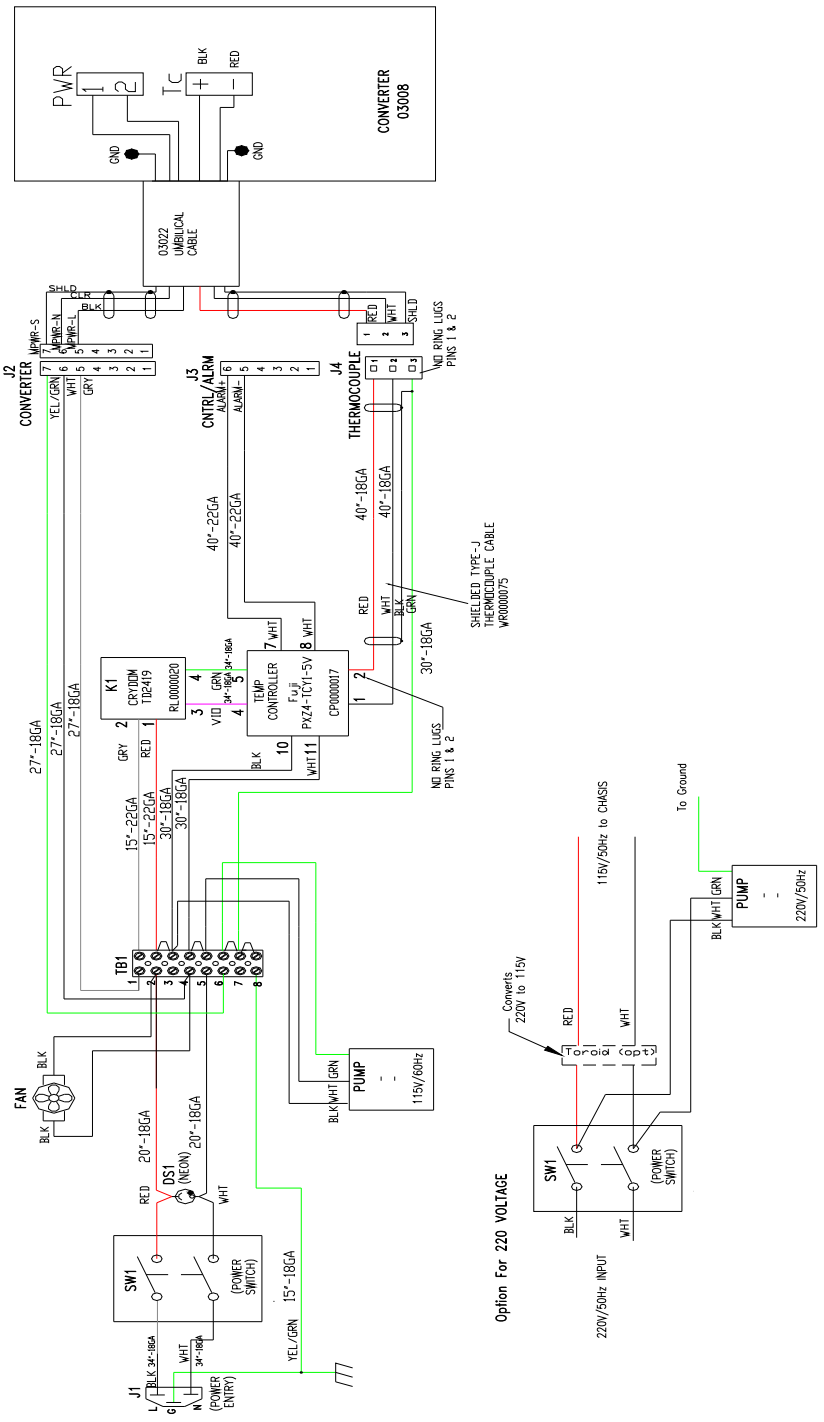

Figure 6 Electrical Diagram

This page intentionally left blank.

8.0 M200EU-NO_Y SPARE PARTS LIST

The following spare parts list supplements the spare parts list for the M200EU analzyer. Note: Use of replacement parts other than those supplied by API may result in non-compliance with European Standard EN 61010-1.

PART NO.	DESCRIPTION
000940400	ORIFICE, 4 MIL 80 CC, O3 FLOW Rx CELL
000941000	ORIFICE, 13 MIL 800 CC, Rx CELL
016300300	SAMPLE FILTER ASSY
047200200	ASSY, MOLY GUTS, NOy
023180000	M501Y LEVEL 1 SPARES KIT
009690200	FILTER, TFE, 47 mm, 1UM, Quantity 100
009690300	FILTER, TFE, 47 mm, 1UM, Quantity 30
PS0000038	12 VDC, SWITCHING POWER SUPPLY
PS0000037	+5, +/- 15 VDC, SWITCHING POWER SUPPLY
FA0000006	FAN, BYPASS PUMP CHASSIS
013140000	FAN, PMT COOLER
FL0000001	SINTERED FILTER
FL0000003	FILTER, DFU
052900300	ASSY, HEATER BAND, CONVERTER, TYPE J
HW0000020	SPRING, FLOW CONTROL
HW0000036	TFE THREAD TAPE (48 FT)
HW0000037	TIE, CABLE
OR0000094	O-RING, SAMPLE FILTER
037860000	RETAINING RING, SAMPLE FILTER
OR0000086	O-RING, SAMPLE ORIFCE HOLDERS
PU0000005	BYPASS PUMP,M501Y
PU0000011	REBUILD KIT, BYPASS PUMP
046150000	SAMPLE PUMP
055300000	REBUILD KIT, SAMPLE PUMP